Amphenol® RF

WIRELESS INFRASTRUCTURE

SOLUTIONS GUIDE

High Performance Solutions For A Wireless World

TABLE OF CONTENTS

About Amphenol RF 3

Wireless Infrastructure Overview 4

Application Matrix 5

Applications Overview 6

Engineering Capabilities 8

Product Reference Guides 9

2.2/5 10

4.3/10 12

7/16 14

AFI 17

AMC 19

AMC4 21

AMMC 22

HD-EFI 24

MCX 26

MMCX 28

N-Type 30

PSMP 32

QMA 34

SMA 37

SMP 41

SMPM 43

Cable Assemblies 46

Adapters 56

ABOUT AMPHENOL RF

Amphenol RF is the largest manufacturer of radio frequency connectors, coaxial adapters and RF cable assemblies in the world. With a global team of experienced engineers, Amphenol RF is able to offer the broadest portfolio of standard RF products on the market today. Our engineering capabilities extend to custom product development to meet the challenges of design-specific constraints.

Amphenol RF has a global footprint of operations in North America, Europe and Asia.

Q-FLEX

www.q-flex.fi info@q-flex.fi
+358 2 4894 500

WIRELESS INFRASTRUCTURE AND 5G OVERVIEW

Wireless infrastructure is the hardware backbone of mobile and fixed wireless networks. 5G, the next generation of mobile network standards, promises high data rates to enable low-latency applications including safe autonomous driving and 4K video streaming to smartphones.

Amphenol RF is prepared for 5G, with innovative new RF product lines as well as industry standard products. Connectors, adapters and cable assemblies from Amphenol RF include high density, low cost, and robust products to enable the wireless infrastructure evolution.

LOW PIM SOLUTIONS

PIM, or Passive Intermodulation, refers to interfering signals that diminish the performance of wireless networks. Amphenol RF offers low PIM products including HD-EFI, N-Type, PSMP, SMP, SMPM, 2.2/5, 4.3/10, and 7/16 connector series, as well as cable assemblies and adapters.

APPLICATION MATRIX

	BASE STATION ANTENNAS	MIMO ANTENNAS	SMALL CELLS	DISTRIBUTED ANTENNA SYSTEMS	WIRELESS BACKHAUL	FIXED WIRELESS BROADBAND	MOBILE DEVICES	MASSIVE IOT	CRITICAL COMMUNICATIONS	WIRELESS MODULES	MAX FREQUENCY	IMPEDANCE	COUPLING
AFI	●	●	●	●	●	●					6 GHz	50 & 75 Ohm	Snap-On
AFI-Dart											18 GHz	50 & 75 Ohm	Snap-On
AMC						●	●	●	●	●	6 GHz	50 Ohm	Snap-On
AMMC						●	●	●	●	●	6 GHz	50 Ohm	Snap-On
BNC								●	●		11 GHz	50 & 75 Ohm	Bayonet
FAKRA								●	●		4 GHz	50 Ohm	Snap-On
HD-BNC											6 GHz	50 & 75 Ohm	Bayonet
HD-EFI*	●	●	●	●	●	●					6 GHz	50 Ohm	Push-Pull
MCX						●	●	●	●	●	6 GHz	50 & 75 Ohm	Snap-On
Mini-SMB											2 GHz	75 Ohm	Snap-On
Mini-UHF											2.5 GHz	50 Ohm	Threaded
MMCX						●	●	●	●	●	6 GHz	50 Ohm	Snap-On
N Type*	●	●	●	●	●	●		●	●		18 GHz	50 Ohm	Threaded
Nex 10*	●	●	●	●	●	●					20 GHz	50 Ohm	Threaded, Push-Pull
PSMP*	●	●	●	●	●	●					10 GHz	50 Ohm	Snap-On
QMA	●	●	●	●	●	●					18 GHz	50 Ohm	Push-Pull
QN											11 GHz	50 Ohm	Push-Pull
RF Micro-switches											6 GHz	50 Ohm	Snap-On
SMA	●	●	●	●	●	●	●	●	●	●	26.5 GHz	50 Ohm	Threaded
SMB								●			4 GHz	50 & 75 Ohm	Snap-On
SMC											10 GHz	50 Ohm	Threaded
SMP*	●	●	●	●	●	●					40 GHz	50 Ohm	Snap-On
SMPM*	●	●	●	●	●	●					65 GHz	50 Ohm	Snap-On
SMZ											4 GHz	75 Ohm	Snap-On
TNC								●	●		11 GHz	50 & 75 Ohm	Threaded
TRIAX											50 GHz	75 Ohm	Threaded, Bayonet
TWINAX											0.5 GHz	78 & 95 Ohm	Threaded, Bayonet
UHF											300 MHz	50 Ohm	Threaded
1.0/2.3	●	●	●	●	●	●					10 GHz	50 & 75 Ohm	Push-Pull
2.2/5*	●	●	●	●	●	●					20 GHz	50 Ohm	Threaded,- Push-Pull
4.3/10*	●	●	●	●	●	●					10 GHz	50 Ohm	Threaded,- Push-Pull
7/16*	●	●	●	●	●	●					7 GHz	50 Ohm	Threaded
Cable Assemblies*	●	●	●	●	●	●	●	●	●	●	VARIES BY SERIES INTERFACE		
Adapters*	●	●	●	●	●	●	●	●	●	●			

*Low PIM Products Available

APPLICATIONS OVERVIEW

BASE STATION ANTENNAS

Macro base stations have evolved to be more efficient with Massive MIMO antennas. Many antenna elements and other components in a compact housing, coupled with technologies like beamforming, vastly improve coverage and capacity per antenna.

MIMO ANTENNAS

MIMO or "Multiple-Input Multiple-Output" refers to antenna technology that expands radio capacity by sending and receiving multiple data signals simultaneously over the same channel.

SMALL CELLS

Small cells are short-range radio nodes that supplement macro base stations and create local wireless networks. Dense installations of small cells will be elemental to 5G, providing significantly increased network capacity and support of high data rates.

WIRELESS BACKHAUL

Backhaul units connect local or "edge" networks to a core network. Wireless units are instrumental in servicing low-coverage areas where fiber optic cabling is prohibitive. Backhaul can also help handle rising mobile data rates.

DISTRIBUTED ANTENNA SYSTEMS

Distributed Antenna Systems (DAS) are networks of antenna nodes that increase wireless coverage in areas of high user volumes or low line-of-sight to infrastructure. Stadiums and underground transportation are common DAS applications.

FIXED WIRELESS BROADBAND

Access points mounted outside of buildings and residences enable wireless Internet access for end users. These units connect to wireless infrastructure, eliminating hard wired access to Internet services at consumer premises.

MOBILE DEVICES

End users gain access to mobile networks and the Internet through wireless devices. User mobile devices include smartphones, tablets, laptops, and hotspots. 5G technology will expand mobile applications to 4K video streaming, virtual reality, and more.

MASSIVE IOT

IoT or the "Internet of Things" refers to the connection of objects to the Internet. 5G will enable IoT at massive scales, driving data transfer and analytics in applications from smart cities to industrial automation.

CRITICAL COMMUNICATIONS

Mission-critical communication requires high bandwidth, low latency data transfer. Historically, only wired protocols have achieved these features. 5G technology is predicted to enable wireless critical communications for industrial automation and more.

WIRELESS MODULES

Embedded wireless modules enable devices to send and receive data. Modules house components in a standard package, making it easier for manufacturers to integrate wireless connectivity into devices from smart appliances to industrial controls.

ENGINEERING CAPABILITIES

As a leader in the design and manufacturing of RF interconnect products, Amphenol RF understands that every application is unique. When standard products don't match your needs, our dedicated team of engineers can develop the ideal solution for any application, in any industry.

With a global presence, Amphenol RF has experienced engineers in North America, Europe and Asia, and production capabilities in China, Mexico and the United States. Our quality team oversees the entire process from initial design through delivery, to ensure your satisfaction.

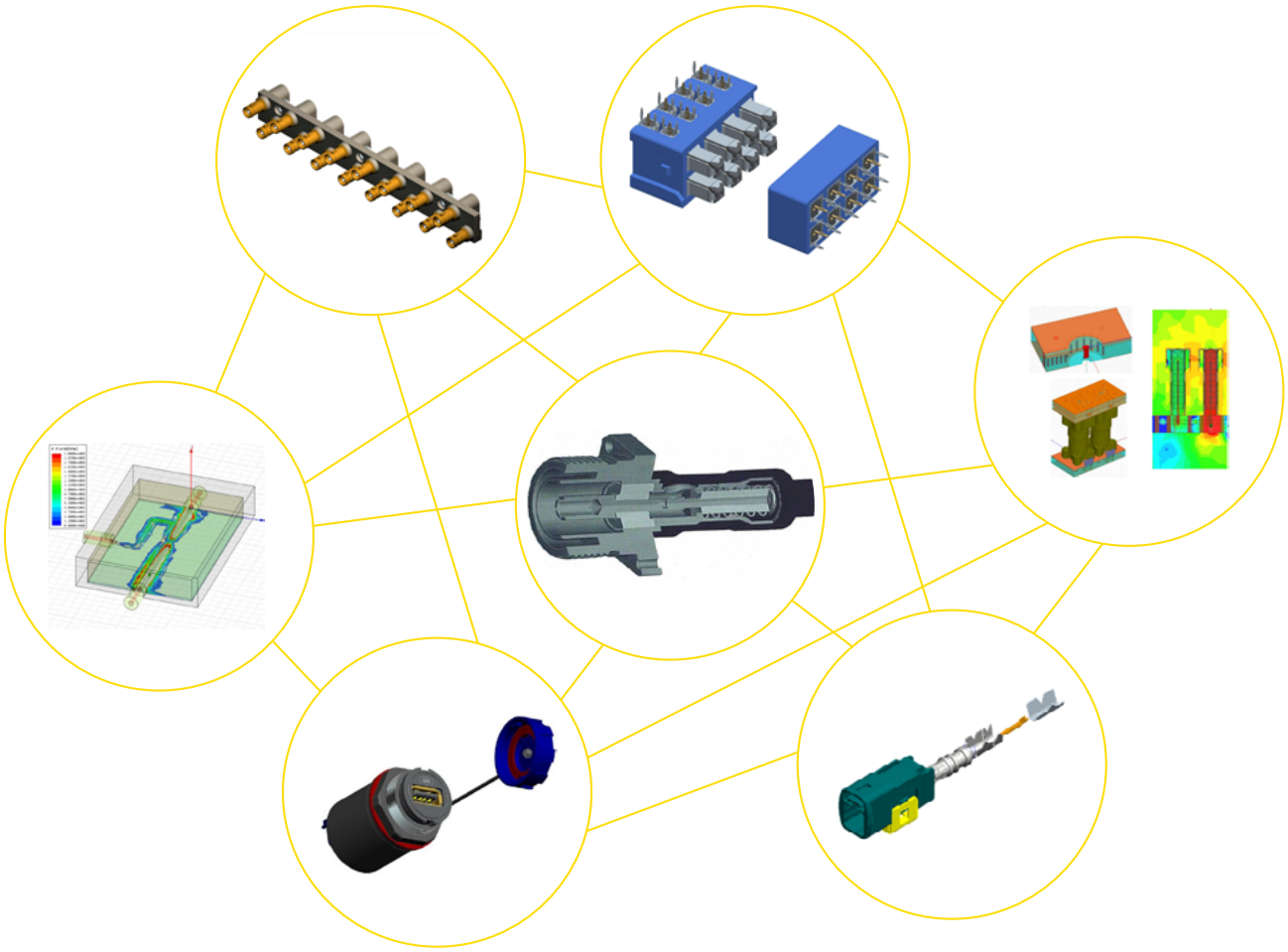

OUR ENGINEERING SERVICES INCLUDE:	OUR ENGINEERING TOOLBOX INCLUDES:
Ganged Connector Solutions	Pro/Engineer 3D Mechanical Design
Custom Cable Assemblies	ANSOFT HFSS 3D RF Analysis
Mixed Signal Applications	ANSYS 3D Mechanical Analysis
Modifications of Existing Designs	Agilent Vector Network Analyzers
Application Specific Optimized Return Loss	
PCB Launch Optimization	

PRODUCT REFERENCE GUIDES

2.2/5 PRODUCT SERIES

225-101P-52S

225-100J-52S

Overview

Amphenol RF's line of 2.2/5 connectors are a compact version of the previously released 4.3/10 connector series, with a 53% smaller footprint. This connector series is lightweight and can accommodate thick, low loss cables up to a half inch. The robust design makes these connectors ideal for both indoor and outdoor applications.

The 2.2/5 connector series is designed to meet the needs of applications which require low PIM in order to avoid interference in network quality during high speed data transmission. It offers flexibility in installation with the ability to blind mate.

Features and Benefits

- Excellent low PIM performance
- Lightweight, compact design
- Optimized for 1/4, 3/8 and 1/2 inch corrugated cables
- Ideal for outdoor applications

Applications

- Small Cells
- Mobile Networks
- Distributed Antenna Systems (DAS)
- Low Power Base Stations
- In-Building Architecture
- MIMO Antennas
- Test & Measurement

Ordering Information

Cable Mount Connectors

Part Number	Description
225-108J-52S	Bulkhead Jack for RG-402
225-109J-52S	Bulkhead Jack for RG-405
225-104J-52S	Jack for RG-402
225-105J-52S	Jack for RG-405
225-100J-52S	4-Hole Flange Jack for RG-402
225-102J-52S	4-Hole Flange Jack for RG-405
225-106P-52A	Right-Angle Plug for RG-402
225-107P-52A	Right-Angle Plug for RG-405
225-101P-52S	Straight Plug for RG-402
225-103P-52S	Straight Plug for RG-405

Adapters

Part Number	Description
AD-716P225J-1	2.2/5 Jack Adapter to 7/16 Plug
AD-4310J225P-1	2.2/5 Plug to 4.3/10 Jack Adapter
AD-NJ225P-1	2.2/5 Plug to Type-N Jack Adapter
AD-716J225P-1	2.2/5 Plug to 7/16 Jack Adapter

Excellent PIM Performance <-166 dBc

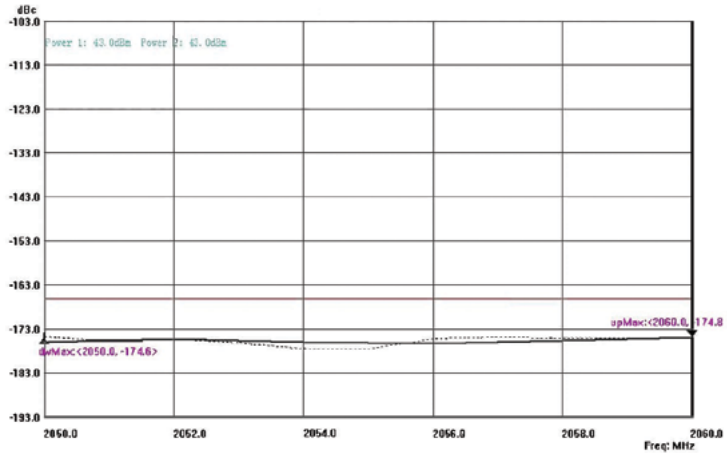

Amphenol RF
Four Old Newtown Road
Danbury, CT 06810

*For more information visit **www.amphenolrf.com***
or call 800.627.7100

2.2/5 PRODUCT SERIES

Technical Specifications

Electrical

Impedance		50 Ω
Frequency Range		DC - 20 GHz
Dielectric Withstanding Voltage		1500 VRMS
PIM (Passive Intermodulation)		- 166 dBc @ 2 x 20 W
Return Loss	Interface	DC-3 GHz: 38 dB, 3-6 GHz: 36 dB
	Cable Connector (typ)	DC-4 GHz: 33 dB, 4-6 GHz: 30 dB
Power Handling		250 W (2 GHz) @ 40°C

Mechanical

Mating Cycles	100 Min
Recommended Torque (Screw Type)	3 Nm

Environmental

Temperature Range	-40°C to +85°C

Materials

Body	Brass, Albaloy Plating
Insulator	PTFE, Natural
Inner Contact	Beryllium Copper, Silver Plating
Outer Contact	Beryllium Copper, Albaloy Plating

Size Comparison

2.2/5 Series

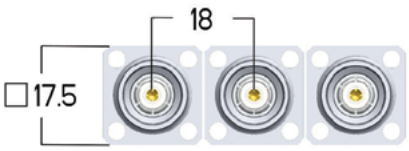

4.3/10 Series

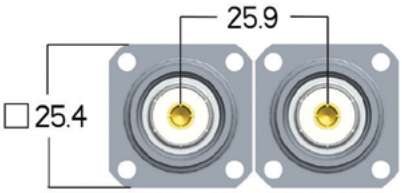

7/16 Series

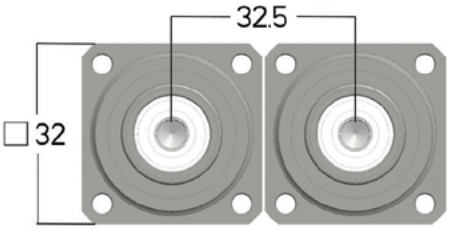

4.3/10 CONNECTOR SERIES

4.3/10 connectors offer the same robust design as 7/16 connectors but are smaller and up to 40% lighter, allowing for much more dense, lighter weight applications. These designs are IP67 compliant for protection against dust and water ingress in outdoor applications, and provide excellent VSWR performance up to 6 GHz. Separate electrical and mechanical components yield very stable PIM performance regardless of coupling torque, allowing for easier installation. Silver plated contacts and white bronze plated bodies offer a high degree of conductivity, corrosion resistance and durability.

FEATURES & BENEFITS

Ideal for applications requiring low PIM and low attenuation
White bronze plated bodies & silver contacts offer high degree of conductivity, corrosion resistance, and durability
Same robust design as 7/16 connectors, but smaller and up to 40% lighter
IP67 compliant to protect against dust and water ingress

For more 4.3/10 connectors, visit:

https://www.amphenolrf.com/connectors/4-3-10.html

INTERFACE DIMENSIONS

PLUG

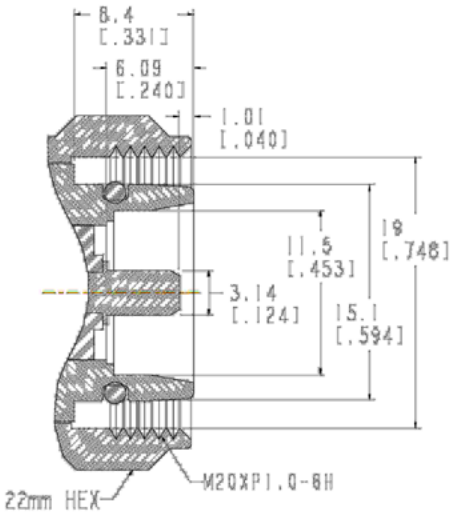

JACK

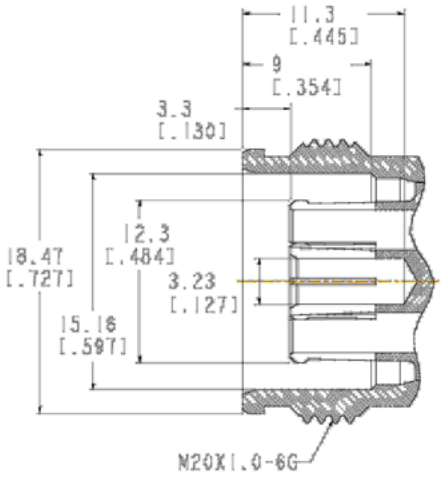

4.3/10 CONNECTOR SERIES

CABLE MOUNT

STRAIGHT PLUGS

			Plating		Termination		
Part Number	**Cable Type**	**Impedance**	**Body**	**Contact**	**Ferrule**	**Contact**	**Special Features**
431-123P-52S	RG-402, 0.141 Semi-Rigid	50	White Bronze	Silver	Solder	Press-Fit	IP67
431-124P-52S	RG-401, 0.250 Semi-Rigid	50	White Bronze	Silver	Solder	Press-Fit	IP67
431-125P-52S	1/2" Annular	50	White Bronze	Silver	Clamp	Press-Fit	IP67
431-126P-52S	1/2" Helical Corrugated	50	White Bronze	Silver	Clamp	Press-Fit	IP67

VIEW ALL

STRAIGHT JACKS

			Plating		Termination		
Part Number	**Cable Type**	**Impedance**	**Body**	**Contact**	**Ferrule**	**Contact**	**Special Features**
431-114J-52S	RG-402, 0.141 Semi-Rigid	50	White Bronze	Silver	Solder	Press-Fit	IP67, 4-Hole Flange, Panel Mount, Extended Body
431-115J-52S	RG-401, 0.250 Semi-Rigid	50	White Bronze	Silver	Solder	Press-Fit	IP67, 4-Hole Flange, Panel Mount
431-119J-52S	RG-405, 0.086 Semi-Rigid	50	White Bronze	Silver	Solder	Press-Fit	IP67, 4-Hole Flange, Panel Mount
431-128J-52S	RG-402, 0.141 Semi-Rigid	50	White Bronze	Silver	Solder	Press-Fit	IP67, 4-Hole Flange, Panel Mount

VIEW ALL

PANEL MOUNT

STRAIGHT JACKS

				Plating		
Part Number	**Mounting**	**Termination Style**	**Impedance**	**Body**	**Contact**	**Special Features**
431-118J-52S	4-Hole Flange	Round Post	50	White Bronze	Silver	IP67, Extended Body
431-131J-52S	4-Hole Flange	Round Post	50	White Bronze	Silver	IP67
431-113J-52S	4-Hole Flange	Threaded Contact	50	White Bronze	Silver	IP67, Recessed M3 Threaded Contact, Extended Body
431-117J-52S	4-Hole Flange	Threaded Contact	50	White Bronze	Silver	IP67, M3 Threaded Contact, Extended Body
431-127J-52S	4-Hole Flange	Threaded Contact	50	White Bronze	Silver	IP67, Recessed M3 Threaded Contact
431-130J-52S	4-Hole Flange	Threaded Contact	50	White Bronze	Silver	IP67, M3 Threaded Contact
431-116J-52S	4-Hole Flange	Solder Cup	50	White Bronze	Silver	IP67, Extended Body
431-129J-52S	4-Hole Flange	Solder Cup	50	White Bronze	Silver	IP67

VIEW ALL

7/16 CONNECTOR SERIES

The 7/16 series name derives from the metric dimensions of the connector interface: 7mm OD of inner contact, 16 mm ID of outer contact. These connectors provide superior performance for both return loss and intermodulation distortion (IMD).

These connectors are extremely robust and stable and offer waterproof options, making them ideal for applications where vibration resistance and environmental protection is important. Because they are designed to minimize signal distortion from intermodulation, 7/16 connectors are especially suitable for base stations and broadcast communication systems.

FEATURES & BENEFITS

Low IMD and low VSWR provides improved system performance
Self-flaring design ensures ease of installation with standard hand tool
Pre-assembled gasket protects against dust and water (IP67) per IEC 169
Silver-plated contacts and silver or white bronze-plated bodies deliver a high conductivity and corrosion resistance

For more 7/16 connectors, visit:

https://www.amphenolrf.com/connectors/7-16.html

INTERFACE DIMENSIONS

PLUG

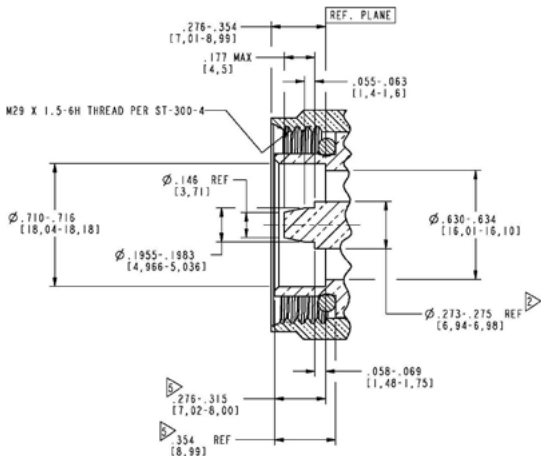

JACK

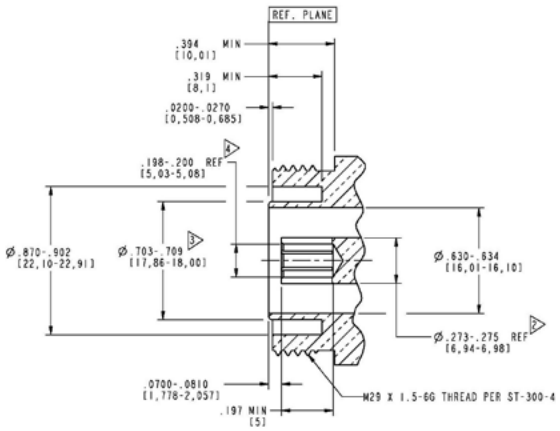

7/16 CONNECTOR SERIES

CABLE MOUNT

STRAIGHT PLUGS

			Plating		Termination		
Part Number	**Cable Type**	**Impedance**	**Body**	**Contact**	**Ferrule**	**Contact**	**Special Features**
272103	RG-58, LMR-195	50	White Bronze	Silver	Crimp	Solder	
272104	RG-55, RG-142	50	White Bronze	Silver	Crimp	Crimp	
272105	RG-8, RG-213	50	White Bronze	Gold	Crimp	Solder	
272107	LMR-400	50	White Bronze	Silver	Crimp	Solder	
272108	LMR-600	50	White Bronze	Silver	Crimp	Press-Fit	
272109	0.141 Semi-Rigid	50	White Bronze	Silver	Solder	Press-Fit	
272110	0.250 Semi-Rigid	50	White Bronze	Silver	Solder	Press-Fit	
272187	LMR-240	50	White Bronze	Silver	Crimp	Press-Fit	
272293	0.085 Semi-Rigid	50	Silver	Silver	Solder	Press-Fit	
272109-10	0.141 Semi-Rigid	50	White Bronze	Silver	Solder	Solder	

VIEW ALL

RIGHT ANGLE PLUGS

			Plating		Termination		
Part Number	**Cable Type**	**Impedance**	**Body**	**Contact**	**Ferrule**	**Contact**	**Special Features**
272111	RG-58	50	White Bronze	Silver	Crimp	Solder	
272115	LMR-400	50	White Bronze	Silver	Crimp	Solder	
272118	0.250 Semi-Rigid	50	White Bronze	Silver	Solder	Solder	
272196	LMR-240	50	White Bronze	Silver	Crimp	Solder	
272117-10	0.141 Semi-Rigid	50	White Bronze	Silver	Solder	Solder	
716-113	0.141 Semi-Rigid	50	White Bronze	Silver	Clamp	Solder	
716-3	RG-393	50	White Bronze	Silver	Crimp	Solder	
716-57-0002	3/8" Helical	50	White Bronze	Silver	Solder	Solder	

VIEW ALL

STRAIGHT JACKS

			Plating		Termination		
Part Number	**Cable Type**	**Impedance**	**Body**	**Contact**	**Ferrule**	**Contact**	**Special Features**
272141	RG-55, RG-142	50	White Bronze	Silver	Crimp	Crimp	
272101	0.250 Semi-Rigid, RG-401	50	White Bronze	Silver	Solder	Press-Fit	4-Hole Flange
272121	RG-8, RG-213	50	White Bronze	Silver	Solder	Solder	4-Hole Flange
272153	RG-8, RG-213	50	White Bronze	Silver	Crimp	Crimp	Bulkhead
272159	0.250 Semi-Rigid, RG-401	50	Silver	Silver	Solder	Press-Fit	Bulkhead
272100-10	0.141 Semi-Rigid, RG-402	50	Silver	Silver	Solder	Press-Fit	4-Hole Flange
272155-10	LMR-400	50	White Bronze	Silver	Crimp	Crimp	Bulkhead
272158-10	0.141 Semi-Rigid, RG-402	50	White Bronze	Silver	Solder	Press-Fit	Bulkhead
716-140	RG-58	50	White Bronze	Silver	Crimp	Crimp	Bulkhead

VIEW ALL

7/16 CONNECTOR SERIES

PANEL MOUNT

STRAIGHT PLUGS

				Plating		
Part Number	**Mounting**	**Termination Style**	**Impedance**	**Body**	**Contact**	**Special Features**
716-199	4-Hole Flange	Round Post	50	White Bronze	Silver	.4" Dielectric/1.42" Post
716-49	4-Hole Flange	Press-Fit	50	White Bronze	Silver	M3 Threaded Stud
272132	4-Hole Flange	Solder Cup	50	White Bronze	Silver	

VIEW ALL

STRAIGHT JACKS

				Plating		
Part Number	**Mounting**	**Termination Style**	**Impedance**	**Body**	**Contact**	**Special Features**
272190	4-Hole Flange	Round Post	50	White Bronze	Gold	.145" Dielectric/.750" Post
716-17G	4-Hole Flange	Slot	50	Silver	Silver	O-Ring
272130	4-Hole Flange	Solder Cup	50	White Bronze	Silver	
716-196	4-Hole Flange	Solder Cup	50	White Bronze	Silver	Bulkhead

VIEW ALL

AFI CONNECTOR SERIES

The AFI connector series is a solution for board-to-board RF applications, where a bullet adapter is embedded into the plug side of the PCB solution.

The AFI interface utilizes a proprietary configuration that allows for “float” to compensate for axial and radial misalignment due to packaging tolerances. This results in a maximum misalignment allowed by the system of 0.030” [0.8 mm] radial and 0.040” [1.0 mm] axial.

The interface is available in two configurations: 75 Ω with a performance of DC to 3 GHz and 50 Ω with a performance of DC to 6 GHz.

FEATURES & BENEFITS

Two-piece board-to-board interconnect with built-in bullet adapter

Robust float system compensates for up to 0.031” radial and 0.040” axial misalignment

Suitable for blindmate or multiple board-to-board applications

For more AFI connectors, visit:

https://www.amphenolrf.com/connectors/afi.html

BOARD TO BOARD MATING CONFIGURATION

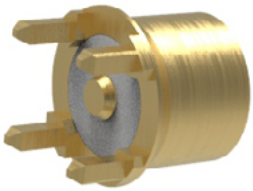

Smooth Bore Jack with Gathering Interface

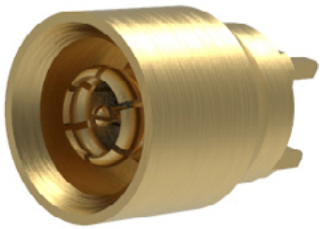

Through Hole Plug with Embedded Bullet Adapter

AFI CONNECTOR SERIES

CABLE MOUNT

STRAIGHT JACKS

Part Number	Mounting	Termination Style	Impedance	Plating		Special Features
				Body	Contact	
920-133J-71P	Through Hole	Through Hole	75	Gold	Gold	
920-160J-51P	Surface Mount	Surface Mount	50	Gold	Gold	
920-250J-51P	Through Hole	Through Hole	50	Gold	Gold	
920-262J-51P	Through Hole	Through Hole	50	Gold	Gold	
920-265J-51P	Through Hole	Through Hole	50	Gold	Gold	

VIEW ALL

RIGHT ANGLE JACKS

Part Number	Mounting	Termination Style	Impedance	Plating		Special Features
				Body	Contact	
920-142J-71A	Through Hole	Through Hole	75	Matte Tin	Gold	Right Angle
920-185J-51A	Through Hole	Through Hole	50	Gold	Gold	Right Angle

VIEW ALL

END LAUNCH JACKS

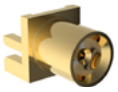

Part Number	Mounting	Termination Style	Impedance	Plating		Special Features
				Body	Contact	
920-222J-51S	Edge Mount	Surface Mount	50	Gold	Gold	

VIEW ALL

STRAIGHT PLUGS

Part Number	Mounting	Termination Style	Impedance	Plating		Special Features
				Body	Contact	
920-132P-71P	Through Hole	Through Hole	75	Gold	Gold	
920-248P-51P	Through Hole	Through Hole	50	Gold	Gold	
920-252P-51P	Surface Mount	Surface Mount	50	Gold	Gold	
920-255P-51P	Through Hole	Through Hole	50	Gold	Gold	
920-264P-51P	Through Hole	Through Hole	50	Gold	Gold	

VIEW ALL

RIGHT ANGLE PLUGS

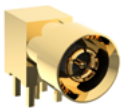

Part Number	Mounting	Termination Style	Impedance	Plating		Special Features
				Body	Contact	
920-140P-71A	Through Hole	Through Hole	75	Matte Tin	Gold	Right Angle
920-233P-51A	Through Hole	Through Hole	50	Gold	Gold	Right Angle

VIEW ALL

END LAUNCH PLUGS

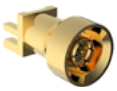

Part Number	Mounting	Termination Style	Impedance	Plating		Special Features
				Body	Contact	
920-123P-71P	Edge Mount	Surface Mount	75	Gold	Gold	

VIEW ALL

AMC PRODUCT SERIES

Overview

Amphenol Micro Coaxial (AMC) connectors are low profile (2.5mm mating height) with an extremely small footprint (3mm x 3mm). Their space-saving design makes these connectors and optimal solution for portable and mobile devices. AMC connectors are fully compatible with the Hirose U.FL series.

Standard AMC Jumper Cables are available and in stock at many of the most common distributors. These jumpers offer an AMC right angle plug to AMC right angle plug on industry standard black 0.81mm, 1.13mm, 1.32mm, and 1.37mm Micro-Coaxial Cable. Custom solutions available upon request.

Features and Benefits

- Supports high frequency transmission from DC to 6GHz
- Ideal for applications where space and weight are a concern
- Easy snap on/off mating
- Surface mount allows for higher PC board densities and automated pcb placement

Applications

- Antennas
- Bluetooth
- GPS
- WLAN
- Cellular and Mobile Devices
- Tablets and Notebook Computers

Amphenol RF
Four Old Newtown Road
Danbury, CT 06810

*For more information visit **www.amphenolrf.com***
or call 800.627.7100

Ordering Information

AMC PCB Connectors

	Part Number	Part Description
	A-1JB	AMC Straight PCB Jack, Surface Mount, 3000 Piece Reel, 50 Ohms

AMC Adapters

Part Number	Part Description
031-6101	MC Plug to TNC RP Jack, Panel Mount, 6GHz, 50 ohm
031-6101-1	AMC Plug to TNC RP Jack, Panel Mount, 3GHz, 50 ohm
031-6109	AMC Plug to BNC RP Jack, Bulkhead, 50 ohm
031-6112	AMC Plug to TNC RP Jack, Bulkhead, 50 ohm
031-6137	AMC Plug to TNC RP Jack, Panel Mount, 50 ohm
031-6208	AMC Plug to TNC Jack, Bulkhead, 50 ohm
901-10097	AMC Plug to SMA RP Jack, Bulkhead, 50 ohm
901-10175	AMC Plug to SMA Jack, Bulkhead, 50 ohm
901-10395	SMA RP Jack to AMC Jack, Bulkhead, 50 ohm

AMC Jumper Assemblies

A-1PA-	113-	100	B	2

Series:
AMC Jumper

Cable Type
081*= 0.81mm
113*= 1.13mm
132*= 1.32mm
137*= 1.37mm
178*= RG-178

Assembly Length in mm (Dim L)

Cable Color:

B* = Black	W = White	N* = Natural (RG-178 Only)
G = Gray	U = Blue	
R = Red	E = Green	

No. of Terminated Ends (1 or 2*)

*** standard configuration options**

Technical Specifications

Electrical

	AMC PCB Mount Connectors	AMC Jumpers
Impedance	50Ω, nominal	
Frequency Range	DC - 6 GHz	
Contact Resistance	Center Contact: 20 mΩ Max.	
	Outer Contact: 10 mΩ Max.	
Insulation Resistance	500 mΩ Min.	
Operating Voltage	500 VRMS	
DWV	No line or insulation breakdown: 200 VAC for 1 Min	
VSWR	1.3 Max. at DC - 3 GHz, 1.35 Max. at 3 - 6 GHz	1.300 Max. at DC - 3 GHz, 1.400 Max. at 3 - 6 GHz

Mechanical

Durability	30 cycles
Temperature Range	-40° to +90°C
Mating	Demating Force 10N Typical – 20N Max

Materials and Finishes

Connector Body	Phosphor bronze, silver plated (0.76u Min.) over copper (1u Min.)	
Connector Center Contact	Phosphor bronze, gold plated (0.2u min.) over nickel (2-3u)	Phosphor bronze, gold plated (0.076u min.) over nickel (2u Min)
Connector Insulator	PBT	
Cable Jacket	FEP	
Cable Dielectric	FEP	
Cable Center Conductor	Annealed copper wire stranded, silver plated	
Cable Outer Conductor	Annealed copper wire braid, tin plated	

AMC4 CONNECTOR SERIES

The AMC4 (Amphenol Micro Coaxial, 4th Generation) connector series is a low profile (0.6 mm off the board) series with an extremely small board footprint (2 mm x 2 mm). This series is used in applications with 50 Ω impedance requirements, and has frequency performance from DC to 6 GHz. The coupling style of the AMC4 connector series is snap-on for secure and easy mating.

FEATURES & BENEFITS

Ultra low profile, 0.6 mm
Small foot print (2 mm x 2 mm)
Easy snap-on/snap-off mating
100% compatible with IPEX MH4 and Murata HSC

For more AMC4 connectors, visit:

https://www.amphenolrf.com/connectors/amc4.html

PCB MOUNT

STRAIGHT JACKS

				Plating		
Part Number	**Mounting**	**Termination Style**	**Impedance**	**Body**	**Contact**	**Special Features**
A-4JA	Surface Mount	Surface Mount	50	Gold	Gold	

VIEW ALL

RELATED PRODUCTS:

CABLE ASSEMBLIES

Part Number	Side 1	Side 2	Cable	Impedance
U-1PU-113-xxxxx	AMC4	AMC4	1.13 mm	50
095-902-501xxxx	AMC4	SMA	1.13 mm	50
095-902-502xxxx	AMC4	SMA	1.13 mm	50
095-902-503xxxx	AMC4	SMA	1.13 mm	50

VIEW ALL

ADAPTERS

Part Number	Side 1	Side 2	Orientation	Impedance
AD-SMAJAMC4J-1	AMC4	SMA	Straight	50

VIEW ALL

AMMC PRODUCT SERIES

Overview

Amphenol Micro Miniature Coaxial (AMMC) connectors are low profile (1.4 mm mated height) with an extremely small footprint (2 mm x 2 mm). Their space-saving design makes these connectors and optimal solution for portable and mobile devices. AMMC connectors are fully compatible with the Hirose W.FL and IPEX MHF III series.

Standard AMMC Jumper Cables are available and in stock at many of the most common distributors. These jumpers offer an AMMC right angle plug to AMMC right angle plug on industry standard black 0.81mm and 1.13mm Micro-Coaxial Cable. Custom solutions available upon request.

Features and Benefits

- Supports high frequency transmission from DC to 6GHz
- Ideal for applications where space and weight are a concern
- Easy snap on/off mating
- Surface mount allows for higher PC board densities and automated pcb placement

Applications

- Antennas
- Bluetooth
- GPS
- WLAN
- Cellular and Mobile Devices
- Tablets and Notebook Computers

Ordering Information

AMMC PCB Connectors

	Part Number	Part Description
	A-2JA	AMMC Straight PCB Jack, Surface Mount, 3000 Piece Reel, 50 Ohms

AMMC Adapters

	Part Number	Part Description
	242290	AMMC Jack to SMA Plug
	242291	AMMC Jack to SMA Jack

AMMC Jumper Assemblies

A-2PA-	113-	100	B	2

Series:
AMC Jumper

Cable Type
081*= 0.81mm
113*= 1.13mm

Assembly Length in mm (Dim L)

Cable Color:

B* = Black	W = White
G = Gray	U = Blue
R = Red	E = Green

No. of Terminated Ends (1 or 2*)

* standard configuration options

Amphenol RF
Four Old Newtown Road
Danbury, CT 06810

*For more information visit **www.amphenolrf.com***
or call 800.627.7100

AMMC PRODUCT SERIES

Technical Specifications

Electrical

	AMMC PCB Mount Connectors	AMMC Jumpers
Impedance	50Ω, nominal	
Frequency Range	DC - 6 GHz	
Contact Resistance	Center Contact: 20 mΩ Max.	
	Outer Contact: 10 mΩ Max.	
Insulation Resistance	500 mΩ Min.	
Operating Voltage	500 VRMS	
DWV	No line or insulation breakdown: 200 VAC for 1 Min	
VSWR	1.3 Max. at DC - 3 GHz, 1.35 Max. at 3 - 6 GHz	1.300 Max. at DC - 3 GHz, 1.400 Max. at 3 - 6 GHz

Mechanical

Durability	20 cycles
Temperature Range	-40° to +90°C
Mating	Withdrawl Force 4N Min. (initial) 2N Min. (after cycling)

Materials and Finishes

Connector Body	Phosphor bronze, silver plated (0.76u Min.) over copper (1-2u)	
Connector Center Contact	Phosphor bronze, gold plated (0.2u min.) over nickel (2-3u)	Phosphor bronze, gold plated (0.07u min.) over nickel (1.3-2.5u)
Connector Insulator	PBT	
Cable Jacket	FEP	
Cable Dielectric	FEP	
Cable Center Conductor	Annealed copper wire stranded, silver plated	
Cable Outer Conductor	Annealed copper wire braid, silver plated	

HD-EFI PRODUCT SERIES

Overview

The HD-EFI product series is a micro-miniature interface designed to allow large board tolerance stack ups, blind mating, and multiple RF lines. This is achieved by maximizing radial and axial float while maintaining high frequency RF performance.

HD-EFI PCB jacks are available in through-hole, surface mount, and edge launch designs. The three-piece mating system uses a limited detent and a smooth bore PCB connector, joined by a floating bullet adapter in between. The generous gathering cone and unique bullet design allows for 1.4mm of axial float, and 1.4mm of radial float, with a maximum float angle of 5 degrees.

These 50 ohm products have an operating frequency of DC to 6 GHz, making them ideal for high-performance applications with a small package size. The selection of PCB mounts and bullet lengths offer versatility for board launches and PCB stacking configurations.

HD-EFI bullet adapters are uniquely designed to provide a crash-proof mating, facilitated by the extension of the insulator beyond the adapter body. Used in conjunction with the smooth bore connectors, the mating system allows for easy alignment and a secure connection.

Features and Benefits

- Designed to maximize radial and axial float in board-to-board applications
- Available in through-hole, surface mount, and edge launch configurations
- Provides crash-proof mating

Applications

- Wireless Base Station Equipment
- Backplane Design
- Multiple Board to Board Connections
- Complex PCB Stack-ups

Ordering Information

PCB Mount Jack, Male Contact

	Smooth Bore	Limited Detent
Surface Mount	920-501J-53P	920-502J-52P
Through Hole	920-503J-53P	920-504J-52P
Edge Mount	920-508J-53P	920-507J-52P

920-503J-53P

920-504J-52P

920-508J-53P

Bullet Adapter, Female Contact

Part Number	Description	PCB Spacing
920-505A-51S	Bullet Adapter, 8.38mm	12.12mm
920-506A-51S	Bullet Adapter, 7.72mm	11.46mm
920-509A-51S	Bullet Adapter, 13.02mm	16.76mm

920-505A-51S

920-506A-51S

920-509A-51S

Amphenol RF
Four Old Newtown Road
Danbury, CT 06810

*For more information visit **www.amphenolrf.com***
or call 800.627.7100

HD-EFI PRODUCT SERIES

Technical Specifications

Electrical

Impedance			50 Ω	
Frequency Range			DC - 6 GHz	
Voltage Rating			335 VRMS	
Dielectric Withstanding Voltage			1000 VOLTS	
Contact Resistance	Center Contact		5 mΩ Max (Initial)	
	Outer Contact		5 mΩ Max (Initial)	
Insulator Resistance			5000 MΩ Min	
Return Loss / VSWR	Axial Misalignment	DC to 2 GHz	2 to 4 GHz	4 to 6 GHz
(Typical for board-to-board connection)	± 0.7 mm	24 dB (1.14)	20 dB (1.22)	16 dB (1.38)
	± 0.3 mm	28 dB (1.08)	25 dB (1.12)	21 dB (1.20)
Insertion Loss (Mated Solution)	DC - 3 GHz		-0.14dB	
	3 - 6 GHz		-0.27dB	
Isolation			70dB Min @ Up to 4 GHz @ 8mm Pitch	
3rd Order Intermodulation	930 & 955 MHz (2X43 dBm)		-163dBc Max (Low PIM Design)	
Power Handling			40 W @ 2.6 GHz @ 95° C Tested	
			120 W @ 2.5 GHz @ 95° C Tested	

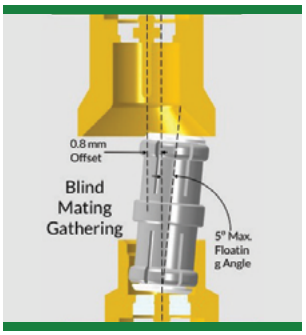

Mechanical

Interface Mating Forces	Engagement	12 N Max (Smoothe Bore), 25 N Max (Limited Detent)
	Disengagement	2 - 6 N (Smooth Bore), 9 N Min (Limited Detent)
Connector Durability		50 Cycles Min. (Limited Detent)
		200 Cycles Min. (Brass Housing) (Smooth Bore)
Center Pin Mating Forces	Engagement	3 N Max (Ø 0.52mm Max Pin with Chamfer)
	Disengagement	0.2 N Min (Ø 0.48mm Min Pin with Chamfer)
Outer Contact Mating Forces	Engagement	8 N Max (Ø 3.52mm Min Hole with Chamfer)
	Disengagement	1 N Min (Ø 3.58mm Min Hole with Chamfer)
Mechanical Misalignment	Axial	±0.7 mm
	Radial	±0.7 mm, ±0.75 mm for 13.02 mm bullet
Max Floating Angle		5° Edge and Surface Mount Parts, 3.5° Through-hole Mount Parts
Min Board to Board Distance		11.46 mm

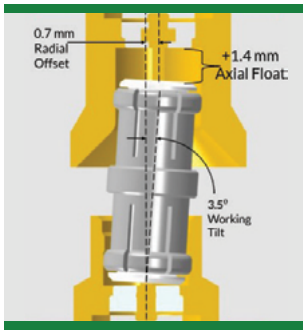

Environmental

Temperature Range	-45°C To 125°C
Thermal Shock	MIL-STD-202, Method 107, condition B
Corrosion Resistance	MIL-STD-202, Method 101, condition B
Humidity/Temperature Cycling	MIL-STD-202, Method 106, condition A
Temperature Life	250 Hours at 125° C
	No Damage to Parts
Vibration	MIL-STD-202, Method 204, condition B
Mechanical Shock	MIL-STD-202, Method 213, condition A

Materials

Body		Brass, Gold Plated
Outer Contacts	Contact	Beryllium Copper, White Bronze Plated
	Stamped Version	Beryllium Copper, White Bronze Plated
Center Contacts	Female	Beryllium Copper Heat Treated, Gold Plated
	Male	Brass, Gold Plated
	Stamped Version	Copper Alloy, Gold Plated
Insulators	Bullet	Delrin, Natural
	PCB Surface/Through-Hole Mount	LCP, Natural
	PCB Edge Mount	PTFE, Natural

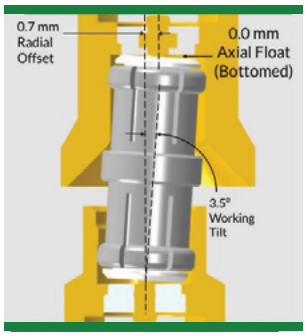

MCX CONNECTOR SERIES

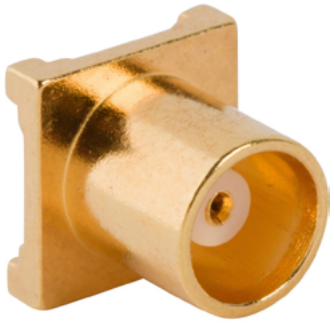

The MCX (Micro Coaxial) series is a 50 Ω & 75 Ω series with broadband capability ranging from DC to 6 GHz. The MCX series features secure, fast and easy snap-on/snap-off coupling. MCX connectors were introduced in the 1980s and conform to the European CECC 22220 spec. This series is the ideal solution for designs where weight and physical space are limited.

FEATURES & BENEFITS

Broadband performance with low reflection DC to 6 GHz
Quick connect/disconnect snap-on mating
Accommodates a wide range of miniature RG flexible coaxial and semi-rigid cable
50 Ω & 75 Ω solutions available

For more MCX Connectors, visit:

https://www.amphenolrf.com/connectors/mcx.html

INTERFACE DIMENSIONS

PLUG

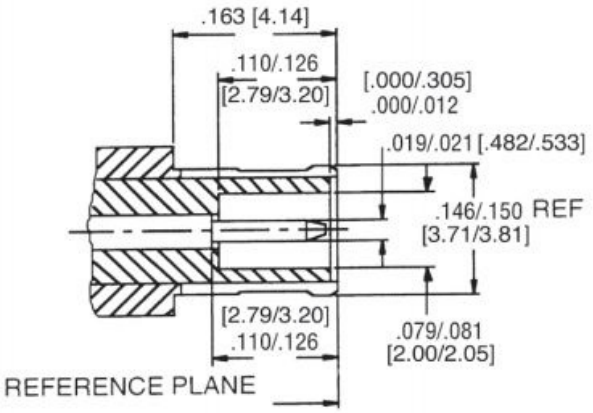

JACK

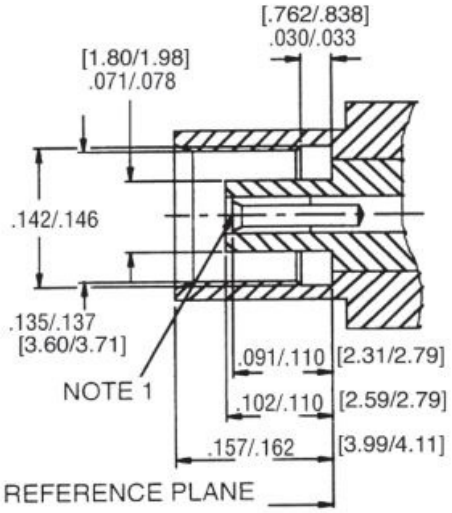

MCX CONNECTOR SERIES

CABLE MOUNT

BULKHEAD JACKS

			Plating		Termination	
Part Number	**Cable Type**	**Impedance**	**Body**	**Contact**	**Ferrule**	**Contact**
252145	RG-174, RG-316	50	Gold	Gold	Crimp	Crimp
252163	RG-405 (0.086 Semi-Rigid)	50	Gold	Gold	Solder	Solder

VIEW ALL

RIGHT ANGLE PLUGS

			Plating		Termination	
Part Number	**Cable Type**	**Impedance**	**Body**	**Contact**	**Ferrule**	**Contact**
919-387P-51A	RG-178, RG-196	50	Gold	Gold	Crimp	Crimp
919-389P-51A	RG-174, RG-316	50	Nickel	Gold	Crimp	Crimp
252102-75	RG-179, RG-187	75	Gold	Gold	Crimp	Solder
252109	RG-405 (0.086 Semi-Rigid)	50	Gold	Gold	Solder	Solder

VIEW ALL

STRAIGHT JACKS

			Plating		Termination	
Part Number	**Cable Type**	**Impedance**	**Body**	**Contact**	**Ferrule**	**Contact**
919-131J-51SX	RG-178, RG-196	50	Gold	Gold	Crimp	Crimp
919-107J-51SX	RG-174, RG-316	50	Nickel	Gold	Crimp	Crimp
252147-75	RG-179, RG-187	75	Gold	Gold	Crimp	Solder
252131	RG-405 (0.086 Semi-Rigid)	50	Gold	Gold	Solder	Solder

VIEW ALL

STRAIGHT PLUGS

			Plating		Termination	
Part Number	**Cable Type**	**Impedance**	**Body**	**Contact**	**Ferrule**	**Contact**
919-388P-51S	RG-178, RG-196	50	Gold	Gold	Crimp	Crimp
919-386P-51S	RG-174, RG-316	50	Nickel	Gold	Crimp	Crimp
252180	RG-58	50	Gold	Gold	Crimp	Crimp
919-137P-71SX	RG-179, RG-187	75	Gold	Gold	Crimp	Solder

VIEW ALL

PCB MOUNT

STRAIGHT PCB JACKS

			Plating	
Part Number	**Mounting**	**Impedance**	**Body**	**Contact**
919-382J-51P	Through-Hole	50	Gold	Gold
919-124J-71P	Through-Hole	75	Gold	Gold
919-384J-51P	Surface Mount	50	Gold	Gold

VIEW ALL

RIGHT ANGLE PCB JACKS

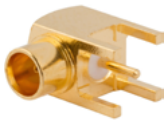

			Plating	
Part Number	**Mounting**	**Impedance**	**Body**	**Contact**
919-383J-51A	Through-Hole	50	Gold	Gold
252129-75	Through-Hole	75	Gold	Gold

VIEW ALL

EDGE MOUNT PCB JACKS

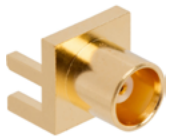

			Plating	
Part Number	**Mounting**	**Impedance**	**Body**	**Contact**
919-385J-51S	Edge Mount	50	Gold	Gold
252151	Edge Mount	50	Gold	Gold
252121-75	Edge Mount	75	Gold	Gold

VIEW ALL

MMCX CONNECTOR SERIES

The MMCX (Micro-Miniature Coaxial) connector series is a micro-miniature version of the MCX. It has all the same features of the MCX series, including 50 Ω impedance with a broadband capability of DC to 6 GHz, secure, fast and easy snap-on/snap-off coupling and a wide range of available connectors. However, MMCX connectors have a smaller footprint than the MCX series.

Like the MCX, the MMCX series conforms to the European CECC 22000 specification.

A full range of MMCX connectors are available, including surface mount, edge card, and cable connectors.

FEATURES & BENEFITS

Broadband performance with low reflection DC to 6 GHz, providing a high-quality solution at a low cost
Quick connect/disconnect snap-on mating reduces installation time
Conforms to European CECC 22000 specifications
Available in straight and right angle plugs and printed circuit board connectors

For more MMCX Connectors, visit:

https://www.amphenolrf.com/connectors/mmcx.html

INTERFACE DIMENSIONS

PLUG

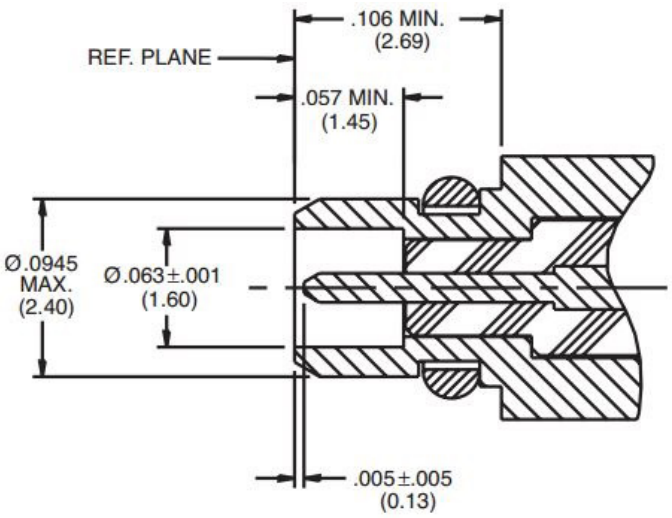

JACK

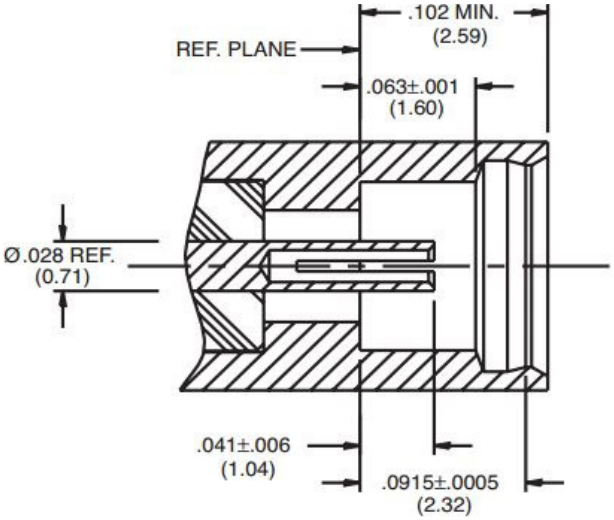

MMCX CONNECTOR SERIES

CABLE MOUNT

STRAIGHT PLUGS

			Plating		Termination	
Part Number	**Cable Type**	**Impedance**	**Body**	**Contact**	**Ferrule**	**Contact**
262100	RG-178, RG-196	50	Gold	Gold	Crimp	Solder
262101	RG-174, RG-316	50	Nickel	Gold	Crimp	Solder
908-41600	0.047" Semi-Rigid	50	Gold	Gold	Solder	Solder

VIEW ALL

RIGHT ANGLE PLUGS

			Plating		Termination	
Part Number	**Cable Type**	**Impedance**	**Body**	**Contact**	**Ferrule**	**Contact**
262102	RG-178, RG-196	50	Gold	Gold	Crimp	Solder
262103	RG-174, RG-316	50	Gold	Gold	Crimp	Solder
262111	RG-316DB	50	Gold	Gold	Crimp	Solder
908-43600	0.047" Semi-Rigid	50	Gold	Gold	Solder	Solder

VIEW ALL

BULKHEAD JACKS

			Plating		Termination	
Part Number	**Cable Type**	**Impedance**	**Body**	**Contact**	**Ferrule**	**Contact**
262120	RG-178, RG-196	50	Gold	Gold	Crimp	Solder
262121	RG-174, RG-316	50	Gold	Gold	Crimp	Solder

VIEW ALL

STRAIGHT JACKS

			Plating		Termination	
Part Number	**Cable Type**	**Impedance**	**Body**	**Contact**	**Ferrule**	**Contact**
262117	RG-178, RG-196	50	Gold	Gold	Crimp	Solder
262118	RG-174, RG-316	50	Nickel	Gold	Crimp	Solder
262119	RG-316DB	50	Gold	Gold	Crimp	Solder

VIEW ALL

PCB MOUNT

STRAIGHT PCB JACKS

			Plating	
Part Number	**Mounting**	**Impedance**	**Body**	**Contact**
908-22101	Surface Mount	50	Gold	Gold
262104	Through-Hole	50	Gold	Gold

VIEW ALL

RIGHT ANGLE PCB JACKS

			Plating	
Part Number	**Mounting**	**Impedance**	**Body**	**Contact**
262105	Through-Hole	50	Gold	Gold

VIEW ALL

EDGE MOUNT PCB JACKS

			Plating	
Part Number	**Mounting**	**Impedance**	**Body**	**Contact**
262107	PCB Cutout	50	Gold	Gold

VIEW ALL

N TYPE CONNECTOR SERIES

N-Type connectors are designed to satisfy the need for a durable, weatherproof, medium-size RF connector with consistent performance through 18 GHz. Our N-Type connectors feature threaded coupling mechanisms and are fully interchangeable with N-Type connectors made to the MIL-C-39012 specification. These connectors are used in systems where excellent RF and mechanical performance is critical.

FEATURES & BENEFITS

Broad line of military, industrial and commercial grade products available

Excellent RF performance from DC to 18 GHz

Threaded coupling mechanism ideal for vibration resistance

For more N-Type Connectors, visit:

https://www.amphenolrf.com/connectors/n-type.html

INTERFACE DIMENSIONS

PLUG

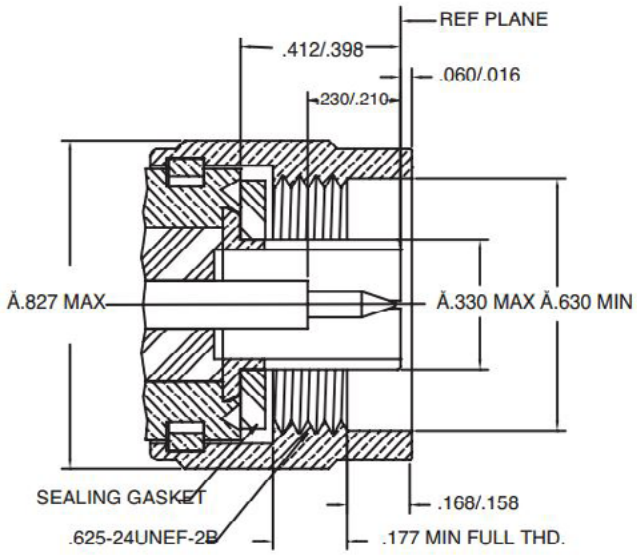

JACK

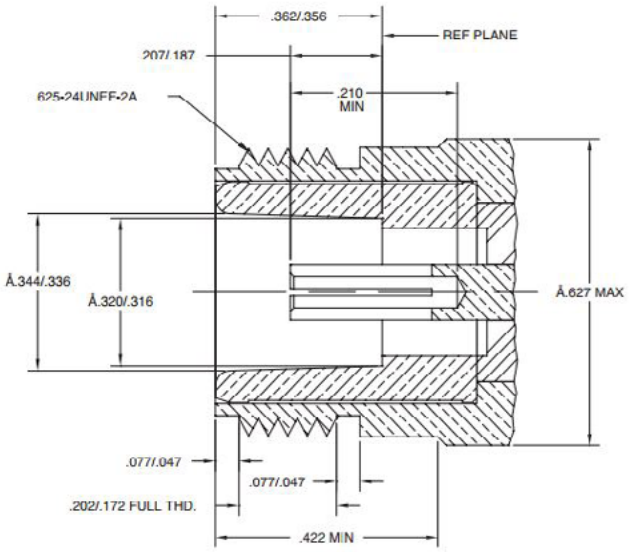

N TYPE CONNECTOR SERIES

CABLE MOUNT

STRAIGHT PLUGS

		Plating		Termination		
Part Number	**Cable Type**	**Body**	**Contact**	**Ferrule**	**Contact**	**Special Feature**
172135RP	RG-8X, LMR-240	White Bronze	Gold	Crimp	Crimp	Reverse Polarity
172102	RG-8, RG-213, RG-393	White Bronze	Gold	Crimp	Crimp	
172113	RG-8, RG-213, RG-393	White Bronze	Gold	Clamp	Crimp	
172100RP	RG-58, LMR-195	Nickel	Gold	Crimp	Crimp	Reverse Polarity
172142	RG-55, RG-142, RG-223	White Bronze	Gold	Crimp	Crimp	
172171	RG-316 DB	White Bronze	Gold	Crimp	Solder	
172166	RG-214	White Bronze	Gold	Crimp	Crimp	
172128	RG-174, RG-316, LMR-100	White Bronze	Gold	Crimp	Crimp	
172214	Belden 7807A, LMR-200	White Bronze	Gold	Crimp	Crimp	
172206	LMR-600	White Bronze	Gold	Crimp	Solder	
082-6553	LMR-400	Nickel	Gold	Crimp	Solder	IP67
172102H243	LMR-400	White Bronze	Gold	Crimp	Crimp	
172135	LMR-240, RG8-X	White Bronze	Gold	Crimp	Crimp	
172100	LMR-195, RG-58	White Bronze	Gold	Crimp	Crimp	
082-340-1052	Belden 9913, 9914	Nickel	Silver	Crimp	Crimp	
172133	0.141 Semi-Rigid, RG-402	White Bronze	Gold	Solder	Crimp	
172211	0.085 Semi-Rigid	White Bronze	Gold	Solder	Crimp	

VIEW ALL

RIGHT ANGLE PLUGS

		Plating		Termination		
Part Number	**Cable Type**	**Body**	**Contact**	**Ferrule**	**Contact**	**Special Feature**
082-4440	RG-9, RG-214, RG-225, RG-393	Silver	Gold	Crimp	Crimp	Military Qualified
172219	RG-8X, LRM-240	White Bronze	Gold	Crimp	Solder	
172176	RG-8	White Bronze	Gold	Crimp	Solder	
172178	RG-55, RG-142, RG-223	White Bronze	Gold	Crimp	Solder	
172245	RG-316 DB	White Bronze	Gold	Crimp	Solder	
172180	RG-174, RG-316, LMR-100	White Bronze	Gold	Crimp	Solder	
172263	LMR-600	White Bronze	Gold	Crimp	Crimp	
082-6489	LMR-400, Belden 9913, 9914	Nickel	Gold	Crimp	Solder	IP67, ARC
172385	LMR-240	White Bronze	Gold	Crimp	Solder	
172215	Belden 7807A, LMR-200	Nickel	Gold	Crimp	Solder	
172177	LMR-195, RG-58	White Bronze	Gold	Crimp	Solder	

VIEW ALL

PANEL MOUNT, 4-HOLE FLANGE PLUGS

		Plating		Termination		
Part Number	**Cable Type**	**Body**	**Contact**		**Contact**	**Special Feature**
172118	N/A	White Bronze	Gold	Solder Cup	Solder	
172260	N/A	White Bronze	Gold	Round Post	Solder	
082-6100-RFX	N/A	Nickel	Gold	Slotted Post	Solder	

VIEW ALL

PSMP CONNECTOR SERIES

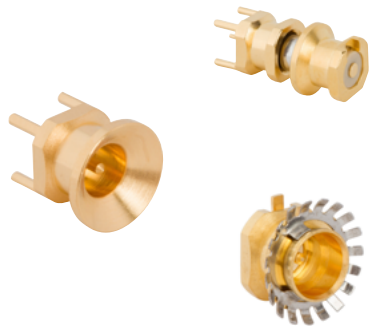

Amphenol RF PSMP connectors are the perfect solution for board-to-board applications requiring high power. With a minimum board spacing of 12.6 mm, the three-piece design allows maximum flexibility for high-density board spacing, and is an ideal solution for blindmate situations.

PSMP connectors are the best combination of SMPs and SMAs. They are compact, board-to-board designs capable of high-performance and high-frequency, with low PIM capabilities. The PSMP has the exact same PCB footprint as the SMP, allowing for easy conversion of applications for higher power handling.

FEATURES & BENEFITS

20 W @ 2.2 GHz continuous power
High Frequency operation up to 10 GHz
12.6 mm minimum board spacing
Axial misalignment: +/- 1 mm

For more PSMP connectors, visit:

https://www.amphenolrf.com/connectors/psmp.html

BOARD TO BOARD MATING CONFIGURATION

Smooth Bore with Gathering Cone Interface

Bullet Adapter

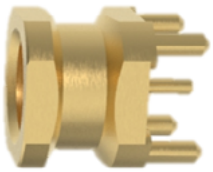

Through-Hole Jack with Detent holds Bullet

PSMP CONNECTOR SERIES

CABLE MOUNT

STRAIGHT PLUGS

			Plating		Termination		
Part Number	**Cable Type**	**Impedance**	**Body**	**Contact**	**Ferrule**	**Contact**	**Special Features**
915-1000	0.141 Semi-Rigid	50	White Bronze	Gold	Solder	Solder	Straight
915-1005	0.086 Semi-Rigid	50	White Bronze	Gold	Solder	Solder	Straight

VIEW ALL

RIGHT ANGLE PLUGS

			Plating		Termination		
Part Number	**Cable Type**	**Impedance**	**Body**	**Contact**	**Ferrule**	**Contact**	**Special Features**
915-1001	0.141 Semi-Rigid	50	White Bronze	Gold	Solder	Solder	Right Angle
915-1006	0.086 Semi-Rigid	50	White Bronze	Gold	Solder	Solder	Right Angle

VIEW ALL

PCB MOUNT

STRAIGHT JACKS, LIMITED DETENT

				Plating		
Part Number	**Mounting**	**Termination Style**	**Impedance**	**Body**	**Contact**	**Special Features**
PSMP-MSLD-PCT1R	Through Hole	Surface Mount	50	Gold	Gold	1 mm Legs
PSMP-MSLD-PCT25	Through Hole	Through Hole	50	Gold	Gold	2.5 mm Legs
PSMP-MSLD-PCS	Surface Mount	Surface Mount	50	Gold	Gold	
PSMP-MSLD-PCTEM	Through Hole	Surface Mount	50	Gold	Gold	EMI Ring
PSMP-MSLD-PCT35	Through Hole	Through Hole	50	Gold	Gold	3.5 mm Legs
PSMP-MSLD-PCE	Edge Mount	Surface Mount	50	Gold	Gold	

VIEW ALL

STRAIGHT JACKS, SMOOTH BORE

				Plating		
Part Number	**Mounting**	**Termination Style**	**Impedance**	**Body**	**Contact**	**Special Features**
PSMP-MSSB-PCT35	Through Hole	Through Hole	50	Gold	Gold	3.5 mm Legs
PSMP-MSSB-PCS	Surface Mount	Surface Mount	50	Gold	Gold	
PSMP-MSSB-PCT1R	Through Hole	Surface Mount	50	Gold	Gold	1.0 mm Legs

VIEW ALL

BULLET ADAPTERS

				Plating		
Part Number	**Side 1**	**Side 2**	**Impedance**	**Body**	**Contact**	**Special Features**
PSMP-FSBA-100	PSMP	PSMP	50	White Bronze	Gold	10.0 mm
PSMP-FSBA-1175	PSMP	PSMP	50	White Bronze	Gold	11.75 mm
PSMP-FSBA-1755	PSMP	PSMP	50	White Bronze	Gold	17.55 mm
PSMP-FSBA-2580	PSMP	PSMP	50	White Bronze	Gold	25.80 mm

VIEW ALL

QMA CONNECTOR SERIES

The QMA connector is a quick disconnect version of the SMA connector and shares the same internal construction, which allows the connector to have excellent performance up to 6 GHz. Because of the innovative coupling mechanism, a 360-degree butt joint is maintained resulting in low RF leakage. Since the RF line is identical to the SMA series, the QMA connectors also offer the same high power handling capability. This gives the series significant advantages over other quick disconnect connectors.

FEATURES & BENEFITS

Snap-on interface for quick and easy installation

Rotatable 360 degrees after connection for flexibility with installation

High power handling capability

For more QMA connectors, visit:

https://www.amphenolrf.com/connectors/qma.html

INTERFACE DIMENSIONS

PLUG

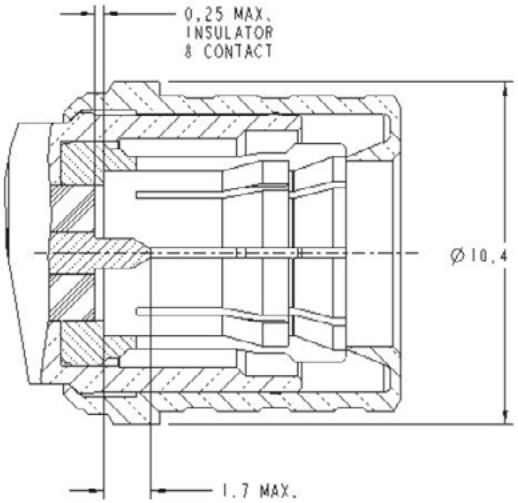

JACK

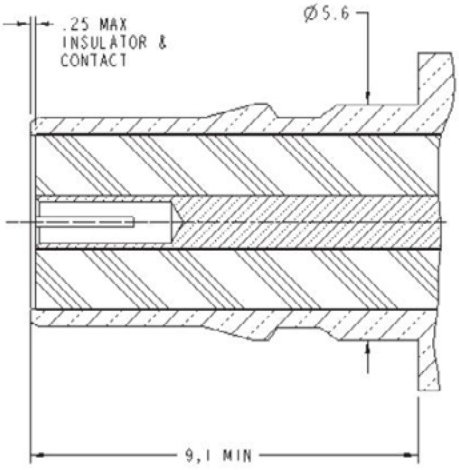

QMA CONNECTOR SERIES

CABLE MOUNT

STRAIGHT PLUGS

			Plating		Termination		
Part Number	**Cable Type**	**Impedance**	**Body**	**Contact**	**Ferrule**	**Contact**	**Special Features**
134104	LMR-240	50	White Bronze	Gold	Crimp	Solder	
930-108P-51S	0.141 Semi-Rigid, RG-402	50	White Bronze	Gold	Solder	Solder	
930-115P-51S	RG-316DB	50	White Bronze	Gold	Crimp	Solder	
930-119P-51S	0.086 Semi-Rigid, RG-405	50	White Bronze	Gold	Solder	Solder	
930-120P-51S	RG-58, LMR-195	50	White Bronze	Gold	Crimp	Solder	
930-129P-51S	RG-316	50	White Bronze	Gold	Crimp	Crimp	
930-166P-51S	RG-142, RG-400	50	White Bronze	Gold	Crimp	Crimp	
930-190P-51S	Belden 9258, LMR-240	50	Nickel	Gold	Crimp	Press-Fit	

VIEW ALL

RIGHT ANGLE PLUGS

			Plating		Termination		
Part Number	**Cable Type**	**Impedance**	**Body**	**Contact**	**Ferrule**	**Contact**	**Special Features**
930-103P-51A	0.141 Semi-Rigid, RG-402	50	Gold	Gold	Solder	Solder	
930-104P-51A	0.086 Semi-Rigid, RG-405	50	Gold	Gold	Solder	Solder	
930-106P-51A	Belden 9258, LMR-240	50	White Bronze	Gold	Crimp	Solder	
930-110P-51A	RG-58, LMR-195	50	White Bronze	Gold	Crimp	Solder	
930-114P-51A	RG-316DB	50	White Bronze	Gold	Crimp	Solder	
930-118P-51A	RG-316	50	White Bronze	Gold	Crimp	Solder	

VIEW ALL

STRAIGHT JACKS

			Plating		Termination		
Part Number	**Cable Type**	**Impedance**	**Body**	**Contact**	**Ferrule**	**Contact**	**Special Features**
134106	RG-58, LMR-195	50	White Bronze	Gold	Crimp	Solder	Bulkhead
134107	LMR-240	50	White Bronze	Gold	Crimp	Solder	Bulkhead
930-121J-51S	0.086 Semi-Rigid, RG-405	50	Gold	Gold	Solder	Solder	Bulkhead
930-122J-51S	0.141 Semi-Rigid, RG-402	50	Gold	Gold	Solder	Solder	Bulkhead
930-123J-51S	RG-316DB	50	White Bronze	Gold	Crimp	Solder	Bulkhead
930-124J-51S	RG-316	50	White Bronze	Gold	Crimp	Solder	Bulkhead

VIEW ALL

QMA CONNECTOR SERIES

PCB MOUNT

STRAIGHT JACKS

				Plating		
Part Number	**Mounting**	**Termination Style**	**Impedance**	**Body**	**Contact**	**Special Features**
930-163J-51P	Bulkhead	Through Hole	50	Gold	Gold	
930-116J-51P		Through Hole	50	White Bronze	Gold	

VIEW ALL

RIGHT ANGLE JACKS

				Plating		
Part Number	**Mounting**	**Termination Style**	**Impedance**	**Body**	**Contact**	**Special Features**
930-111J-51P	Bulkhead	Surface Mount	50	Gold	Gold	
930-128J-51P		Through Hole	50	Gold	Gold	.155" legs

VIEW ALL

END LAUNCH JACKS

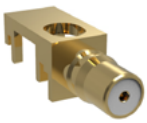

				Plating		
Part Number	**Mounting**	**Termination Style**	**Impedance**	**Body**	**Contact**	**Special Features**
930-159J-51S		Through Hole	50	Gold	Gold	

VIEW ALL

PANEL MOUNT

STRAIGHT PLUGS

				Plating		
Part Number	**Mounting**	**Termination Style**	**Impedance**	**Body**	**Contact**	**Special Features**
930-133P-51S	4-Hole Flange	Round Post	50	Gold	Gold	.059" Dielectric/.17" Post

VIEW ALL

STRAIGHT JACKS

				Plating		
Part Number	**Mounting**	**Termination Style**	**Impedance**	**Body**	**Contact**	**Special Features**
930-132J-51S	4-Hole Flange	Round Post	50	Gold	Gold	.059" Dielectric /.169" Post
930-117J-51S	2 Hole Flange	Round Post	50	White Bronze	Gold	.250" Dielectric/.310" Post
930-105J-51S	Press-Fit	Round Post	50	White Bronze	Gold	
930-134J-51S	Bulkhead	Round Post	50	Gold	Gold	.08" Post
930-175J-51S	Bulkhead	Round Post	50	Nickel	Gold	IP67, .014" Dielectric/.14" Post
930-193J-51S	Bulkhead	Round Post	50	Nickel	Gold	.205" Post

VIEW ALL

SMA CONNECTOR SERIES

Using a threaded interface, SMA 50 Ω ohm connectors are semi-precision units that provide excellent electrical performance from DC to 26.5 GHz and outstanding mechanical durability. SMA connectors feature stainless steel or brass construction and ¼ - 36 threaded coupling, which offers high performance in a compact design. For phase array radar, test equipment, ILS landing systems and other instrumentation using phase matching techniques, SMA interconnects offer a precise and simple means of phase adjustment for microwave devices. Built in accordance with MIL-C-39012 and CECC 2110/111, SMA connectors can be mated with all connectors that meet these specification mating diameters regardless of manufacturer.

FEATURES & BENEFITS

Lightweight, compact and vibration proof design

Low cost commercial grade (brass SMA) available in nickel or gold plating

Terminates to all standard flexible coaxial cables, low-loss (LMR) type cables and industry standard semi-rigid and conformable cables

For more SMA Connectors, visit:

https://www.amphenolrf.com/connectors/sma.html

INTERFACE DIMENSIONS

PLUG

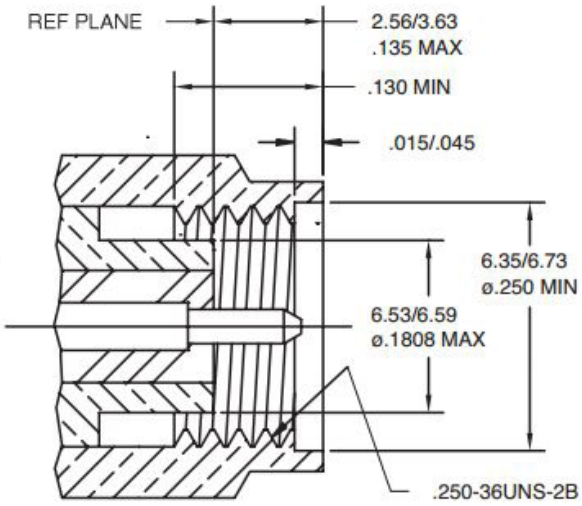

JACK

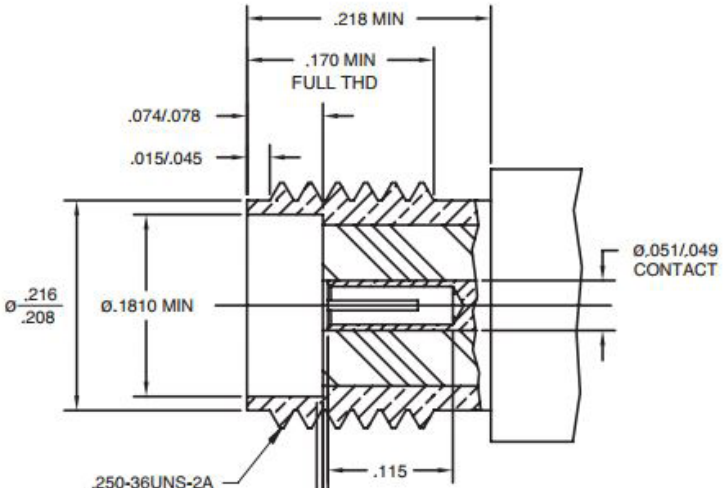

SMA CONNECTOR SERIES

CABLE MOUNT

STRAIGHT PLUGS

		Plating		Termination		
Part Number	**Cable Type**	**Body**	**Contact**	**Ferrule**	**Contact**	**Special Feature**
132231	RG-8X, LMR-240	Gold	Gold	Crimp	Solder	
132113	RG-58, LMR-195	Gold	Gold	Crimp	Solder	
132113RP	RG-58, LMR-195	Gold	Gold	Crimp	Solder	Reverse Polarity
132195	RG-55, RG-142, RG-223	Gold	Gold	Crimp	Solder	
132178	RG-316 DB	Gold	Gold	Crimp	Solder	
901-9511-12SF	RG-316 DB	Passivated	Gold	Crimp	Crimp	Stainless Steel
132193	RG-178, RG-196	Gold	Gold	Crimp	Solder	
132114RP	RG-174, RG-316, LMR-100	Gold	Gold	Crimp	Solder	Reverse Polarity
132114	RG-174, RG-316, LMR100	Gold	Gold	Crimp	Solder	
132234	LMR-200	Gold	Gold	Crimp	Solder	
132102	0.141 Semi-Rigid	Gold	Gold	Solder	Solder	
132298	LMR-400, Belden 9913, 9914	Gold	Gold	Crimp	Solder	
901-9808	0.141 Semi-Rigid	Passivated	Gold	Solder	Solder	Stainless Steel
132101	0.085 Semi Rigid	Gold	Gold	Solder	Solder	
132249	0.047 Semi-Rigid	Gold	Gold	Solder	Solder	

VIEW ALL STRAIGHT PLUGS

RIGHT ANGLE PLUGS

		Plating		Termination		
Part Number	**Cable Type**	**Body**	**Contact**	**Ferrule**	**Contact**	**Special Feature**
132239	RG-8X, LMR-240	Gold	Gold	Crimp	Solder	
132122	RG-58, LMR-195	Gold	Gold	Crimp	Solder	
132194	RG-55, RG-142, RG-223	Gold	Gold	Crimp	Solder	
132182	RG-316 DB	Gold	Gold	Crimp	Solder	
132173	RG-178, RG-196	Gold	Gold	Crimp	Solder	
132123	RG-174, RG-316, LMR-100	Gold	Gold	Crimp	Solder	
132112	0.141 Semi-Rigid	Gold	Gold	Solder	Solder	
132111	0.085 Semi-Rigid	Gold	Gold	Solder	Solder	

VIEW ALL RIGHT ANGLE PLUGS

STRAIGHT JACKS

		Plating		Termination		
Part Number	**Cable Type**	**Body**	**Contact**	**Ferrule**	**Contact**	**Special Feature**
132240	RG-8X, LMR-240	Gold	Gold	Crimp	Solder	
132116	RG-58, LMR-195, Belden 9907, Belden B7806A	Gold	Gold	Crimp	Solder	
132197	RG-55, RG-142, RG-223	Gold	Gold	Crimp	Solder	
132198	RG-316 DB	Gold	Gold	Crimp	Solder	
132279	RG-178, RG-196	Gold	Gold	Crimp	Solder	
132117	RG-174, RG-316, LMR-100	Gold	Gold	Crimp	Solder	
132117RP	RG-174, RG-316, LMR-100	Gold	Gold	Crimp	Solder	Reverse Polarity
132332	LMR-400	Gold	Gold	Crimp	Solder	
132236	LMR-200	Gold	Gold	Crimp	Solder	
132104	0.141 Semi-Rigid	Gold	Gold	Solder	Solder	
132103	0.085 Semi -Rigid	Gold	Gold	Solder	Solder	
132257	0.047 Semi-Rigid	Gold	Gold	Solder	Solder	

VIEW ALL STRAIGHT JACKS

SMA CONNECTOR SERIES

BULKHEAD JACKS

		Plating		Termination		
Part Number	**Mounting**	**Body**	**Contact**		**Contact**	**Special Feature**
132241	RG-8X, LMR-240	Gold	Gold	Crimp	Solder	
132118	RG-58, LMR-195,	Gold	Gold	Crimp	Solder	
132191	RG-55, RG-142, RG-223	Gold	Gold	Crimp	Solder	
132176	RG-316 DB	Gold	Gold	Crimp	Solder	
901-9610-3	RG-316	Gold	Gold	Crimp	Crimp	Stainless Steel
132286	RG-178, RG-196	Gold	Gold	Crimp	Solder	
132119	RG-174, RG-316, LMR-100	Gold	Gold	Crimp	Solder	
132119RP	RG-174, RG-316, LMR-100	Gold	Gold	Crimp	Solder	Reverse Polarity
132106	0.141 Semi-Rigid	Gold	Gold	Solder	Solder	
132105	0.085 Semi-Rigid	Gold	Gold	Solder	Solder	
132251	0.047 Semi-Rigid	Gold	Gold	Solder	Solder	

VIEW ALL

PANEL MOUNT, 4-HOLE FLANGE JACKS

		Plating		Termination		
Part Number	**Mounting**	**Body**	**Contact**		**Contact**	**Special Feature**
132146	4-Hole Flange	Gold	Gold	Round Post	Solder	
132142	4-Hole Flange	Gold	Gold	Solder Cup	Solder	
132166	4-Hole Flange	Gold	Gold	Flat Tab	Solder	

VIEW ALL

PANEL MOUNT, 4-HOLE FLANGE PLUGS

		Plating		Termination		
Part Number	**Mounting**	**Body**	**Contact**		**Contact**	**Special Feature**
132144	4-Hole Flange	Gold	Gold	Round Post	Solder	

VIEW ALL

PANEL MOUNT, 2-HOLE FLANGE PLUGS

		Plating		Termination		
Part Number	**Mounting**	**Body**	**Contact**		**Contact**	**Special Feature**
132141	2-Hole Flange	Gold	Gold	Solder Cup	Solder	
132145	2-Hole Flange	Gold	Gold	Round Post	Solder	

VIEW ALL

PANEL MOUNT, 2-HOLE FLANGE JACKS

		Plating		Termination		
Part Number	**Mounting**	**Body**	**Contact**		**Contact**	**Special Feature**
132147	2-Hole Flange	Gold	Gold	Round Post	Solder	
901-9893-RFX	2-Hole Flange	Nickel	Gold	Solder Cup	Solder	

VIEW ALL

SMA CONNECTOR SERIES

PCB MOUNT

END LAUNCH PCB JACKS

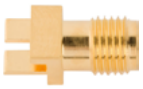

		Plating		
Part Number	**Mounting**	**Body**	**Contact**	**Special Feature**
901-10511-1	End Launch	Gold	Gold	High Frequency 26.5 GHz

VIEW ALL

STRAIGHT THROUGH HOLE JACKS

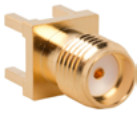

		Plating		
Part Number	**Mounting**	**Body**	**Contact**	**Special Feature**
901-144-8RFX	Through-Hole	Gold	Gold	
132134RP	Through-Hole	Gold	Gold	Reverse Polarity

VIEW ALL

RIGHT ANGLE THROUGH HOLE PCB JACKS

		Plating		
Part Number	**Mounting**	**Body**	**Contact**	**Special Feature**
901-143-6RFX	Through Hole	Gold	Gold	
132203	Through Hole	Gold	Gold	Bulkhead

VIEW ALL

THROUGH-HOLE PCB PLUGS

		Plating		
Part Number	**Mounting**	**Body**	**Contact**	**Special Feature**
901-9895-RFX	Through-Hole	Gold	Gold	
132135	Through-Hole	Gold	Gold	Right Angle

VIEW ALL

END LAUNCH PCB PLUGS

		Plating		
Part Number	**Mounting**	**Body**	**Contact**	**Special Feature**
901-10588	End Launch	Gold	Gold	High-Frequency 26.5 GHz

VIEW ALL

SMP CONNECTOR SERIES

The SMP interface is a micro-miniature interface in the same scale as MMCX connectors but offers a frequency range of DC to 40 GHz. It is commonly used in miniaturized high frequency coaxial modules and is offered in both push-on and snap-on mating styles.

The available detent systems, full and limited, provide respective levels of engagement/disengagement forces. This family of interconnects addresses all package design needs. It can be utilized as a highly shielded interconnect for high data rate applications or in a board-to-board system using a floating bullet. This floating bullet provides a link between mated pairs compensating for both radial and axial misalignment.

Available in a cable-to-board mated pair, the plug side can be configured either right angle or straight with termination capability to 0.047” and 0.086” semi-rigid and conformable, or other flexible coax. The receptacles are designed for surface, through hole, or end launch mounting.

FEATURES & BENEFITS

RF performance DC to 40 GHz

Designed to accommodate both radial and axial misalignment

Push-on and snap-on mating styles for quick installation

For more SMP Connectors, visit:

https://www.amphenolrf.com/connectors/smp.html

INTERFACE DIMENSIONS

PLUG | **JACK (full detent)** | **JACK (limited detent)** | **JACK (smooth bore)**

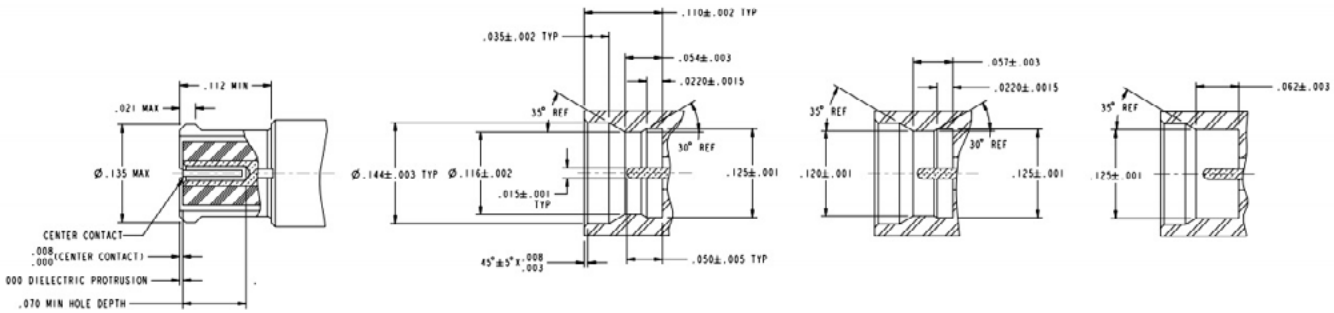

SMP CONNECTOR SERIES

CABLE MOUNT

STRAIGHT PLUGS

			Plating		Termination		
Part Number	**Cable Type**	**Impedance**	**Body**	**Contact**	**Ferrule**	**Contact**	**Special Features**
SMP-FS-C06-1-R	0.047 Semi-Rigid	50	Gold	Gold	Solder	Solder	
SMP-FS-C07-5	0.086 Semi-Rigid	50	Gold	Gold	Solder	Solder	
SMP-FS-C08-1-R	RG-316	50	Gold	Gold	Crimp	Solder	
SMP-FS-C19	RG-178	50	Gold	Gold	Crimp	Solder	

VIEW ALL

RIGHT ANGLE PLUGS

			Plating		Termination		
Part Number	**Cable Type**	**Impedance**	**Body**	**Contact**	**Ferrule**	**Contact**	**Special Features**
SMP-FR-C06-2	0.047 Semi-Rigid	50	Gold	Gold	Solder	Solder	
SMP-FR-C07-1	0.086 Semi-Rigid	50	Gold	Gold	Solder	Solder	
SMP-FR-C08-1	RG-316	50	Gold	Gold	Crimp	Solder	
SMP-FR-C19	RG-178	50	Gold	Gold	Crimp	Solder	

VIEW ALL

PCB MOUNT

STRAIGHT JACKS

				Plating		
Part Number	**Mounting**	**Termination Style**	**Impedance**	**Body**	**Contact**	**Special Features**
SMP-MSCM-PCS11T	Surface Mount	Surface Mount	50	Gold	Gold	Catchers Mitt
SMP-MSLD-PCE-5T	Edge Mount	Surface Mount	50	Gold	Gold	Limited Detent
SMP-MSLD-PCS-16	Surface Mount	Surface Mount	50	Gold	Gold	Catchers Mitt
SMP-MSLD-PCS17T	Surface Mount	Surface Mount	50	Gold	Gold	Limited Detent
SMP-MSLD-PCT15T	Through Hole	Surface Mount	50	Gold	Gold	Limited Detent
SMP-MSLD-PCT16T	Through Hole	Through Hole	50	Gold	Gold	Limited Detent
SMP-MSSB-PCS15T	Surface Mount	Surface Mount	50	Gold	Gold	Smooth Bore
SMP-MSSB-PCT	Through Hole	Through Hole	50	Gold	Gold	Smooth Bore
SMP-MSSB-PCT-1	Through Hole	Surface Mount	50	Gold	Gold	Smooth Bore

VIEW ALL

BULLET ADAPTERS

				Plating		
Part Number	**Side 1**	**Side 2**	**Impedance**	**Body**	**Contact**	**Special Features**
SMP-FS2A-145	SMP	SMP	50	Gold	Gold	14.5 mm
SMP-FS2A-224	SMP	SMP	50	Gold	Gold	22.4 mm
SMP-FS2A-645	SMP	SMP	50	Gold	Gold	6.45 mm
SMP-FS2A-696	SMP	SMP	50	Gold	Gold	6.96 mm
SMP-FS2A-990	SMP	SMP	50	Gold	Gold	9.90 mm

VIEW ALL

SMPM CONNECTOR SERIES

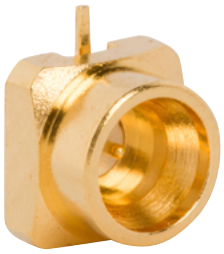

The SMPM interface is a micro-miniature interface with a frequency range of DC to 65 GHz. It is commonly used in miniaturized high frequency coaxial modules and is offered in both push-on and snap-on mating styles.

The full detent and smooth bore mating systems provide respective levels of engagement/disengagement forces. This family of interconnects addresses all package design needs; it can be utilized as a highly shielded interconnect for high data rate applications or in a board-to-board system using a floating bullet. This floating bullet provides a link between mated pairs compensating for both radial and axial misalignment.

Available in a cable-to-board mated pair, the plug side can be configured either right angle or straight with termination capability to 0.047" and 0.086" semi-rigid and conformable, or other flexible coax. The receptacles are designed for surface, through hole, or end launch mounting.

FEATURES & BENEFITS

Superior RF performance DC to 65 GHz
Small package size
Push-on and snap-on mating styles for quick installation

For more SMPM connectors, visit:

https://www.amphenolrf.com/connectors/smpm.html

BOARD TO BOARD MATING CONFIGURATION

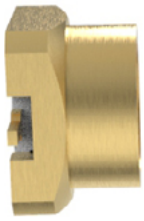

Smooth Bore with Gathering Cone Interface

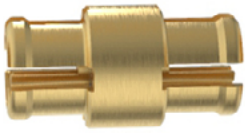

Bullet Adapter

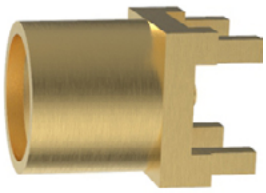

Through-Hole Jack with Detent holds Bullet

SMPM CONNECTOR SERIES

CABLE MOUNT

STRAIGHT PLUGS

			Plating		Termination		
Part Number	**Cable Type**	**Impedance**	**Body**	**Contact**	**Ferrule**	**Contact**	**Special Features**
925-118C-51S	0.086 Semi-Rigid	50	Gold	Gold	Solder	Solder	
925-124P-51S	0.047 Semi-Rigid	50	Gold	Gold	Solder	Solder	
925-129C-51S	RG-178	50	Gold	Gold	Crimp	Solder	

VIEW ALL

RIGHT ANGLE PLUGS

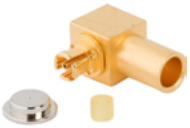

			Plating		Termination		
Part Number	**Cable Type**	**Impedance**	**Body**	**Contact**	**Ferrule**	**Contact**	**Special Features**
925-120C-51R	0.047 Semi-Rigid	50	Gold	Gold	Solder	Solder	
925-123C-51A	0.086 Semi-Rigid	50	Gold	Gold	Solder	Solder	
925-128C-51A	RG-178	50	Gold	Gold	Crimp	Solder	

VIEW ALL

STRAIGHT JACKS

			Plating		Termination		
Part Number	**Cable Type**	**Impedance**	**Body**	**Contact**	**Ferrule**	**Contact**	**Special Features**
925-134J-51S	0.047 Semi-Rigid	50	Gold	Gold	Solder	Solder	Bulkhead
925-135J-51S	0.086 Semi-Rigid	50	Gold	Gold	Solder	Solder	Bulkhead
925-136J-51S	RG-178	50	Gold	Gold	Crimp	Solder	Bulkhead

VIEW ALL

PCB MOUNT

STRAIGHT JACKS

				Plating		
Part Number	**Mounting**	**Termination Style**	**Impedance**	**Body**	**Contact**	**Special Features**
925-126J-51P	Edge Mount	Surface Mount	50	Gold	Gold	Limited Detent
925-137J-51P	Through Hole	Through Hole	50	Gold	Gold	Smooth Bore
925-138J-51P	Through Hole	Through Hole	50	Gold	Gold	Limited Detent
925-143J-51P	Surface Mount	Surface Mount	50	Gold	Gold	Limited Detent
925-144J-51P	Surface Mount	Surface Mount	50	Gold	Gold	Smooth Bore
925-169J-51P	Edge Mount	Surface Mount	50	Gold	Gold	Smooth Bore

VIEW ALL

RIGHT ANGLE JACKS

				Plating		
Part Number	**Mounting**	**Termination Style**	**Impedance**	**Body**	**Contact**	**Special Features**
925-139J-51P	Through Hole	Through Hole	50	Gold	Gold	Smooth Bore
925-140J-51P	Through Hole	Through Hole	50	Gold	Gold	Full Detent

VIEW ALL

SMPM CONNECTOR SERIES

BULLET ADAPTERS

				Plating		
Part Number	**Side 1**	**Side 2**	**Impedance**	**Body**	**Contact**	**Special Features**
925-106A-51S	SMPM	SMPM	50	Gold	Gold	5.33 mm
925-141A-51S	SMPM	SMPM	50	Gold	Gold	7.06 mm
925-142A-51S	SMPM	SMPM	50	Gold	Gold	8.38 mm
925-165A-51S	SMPM	SMPM	50	Gold	Gold	8.48 mm
925-166A-51S	SMPM	SMPM	50	Gold	Gold	12.70 mm
925-167A-51S	SMPM	SMPM	50	Gold	Gold	13.30 mm

VIEW ALL

FIXED LENGTH CABLE ASSEMBLIES

Click on the ● to view all cable assemblies available in each category.

	1.0/2.3	AMC	AMC4	AMMC	BNC	FAKRA	HD-BNC	MCX	MINI-SMB	MMCX	N-TYPE	PROBE	SMA	SMB	SMP	SMPM	TNC	UNTERMINATED
1.0/2.3					●		●											
AMC		●				●		●			●		●				●	●
AMC4													●					
AMMC				●														
BNC	●				●		●						●	●				
FAKRA		●																
HD-BNC	●				●		●											
MCX		●						●					●					
MINI-SMB									●									
MMCX										●			●					
N-TYPE		●									●							
PROBE													●					
SMA		●	●		●			●		●		●	●		●			●
SMB					●									●				
SMP													●		●			
SMPM																●		
TNC		●																
UNTERMINATED		●											●					

FIXED LENGTH CABLE ASSEMBLIES

1.0/2.3 ASSEMBLIES

1.0/2.3 to HD-BNC

Part Number	Side 1	Side 2	Cable	Impedance
095-850-156xxxx	1.0/2.3 Str Plug	HD-BNC Str Plug	Belden 1505A	75
095-850-157xxxx	1.0/2.3 Str Plug	HD-BNC Str Plug	Belden 1694A	75
095-850-155xxxx	1.0/2.3 Str Plug	HD-BNC Str Plug	Belden 1855A	75

1.0/2.3 to BNC

Part Number	Side 1	Side 2	Cable	Impedance
095-850-201xxxx	1.0/2.3 Str Plug	BNC Str Plug	RG-179	75

VIEW ALL 1.0/2.3 CABLE ASSEMBLIES

AMC ASSEMBLIES

AMC to AMC

Part Number	Side 1	Side 2	Cable	Impedance
A-1PA-132-xxxxx	AMC R/A Plug	AMC R/A Plug	1.32 mm	50
A-1PA-081-xxxxx	AMC R/A Plug	AMC R/A Plug	0.81 mm	50
A-1PA-113-xxxxx	AMC R/A Plug	AMC R/A Plug	1.13 mm	50
A-1PA-137-xxxxx	AMC R/A Plug	AMC R/A Plug	1.37 mm	50
A-1PA-178-xxxxx	AMC R/A Plug	AMC R/A Plug	RG-178	50
A-1PL-081-xxxxx	Low Profile AMC R/A Plug	Low Profile AMC R/A Plug	0.81 mm	50

AMC to FAKRA

Part Number	Side 1	Side 2	Cable	Impedance
095-820-109xxxx	AMC R/A Plug	FAKRA Str Blkhd Plug IP67	1.37 mm	50

AMC to MCX

Part Number	Side 1	Side 2	Cable	Impedance
336503-12-xxxx	AMC R/A Plug	MCX Str Blkhd Jack	1.13 mm	50
336503-13-xxxx	AMC R/A Plug	MCX Str Blkhd Jack	1.32 mm	50
336503-14-xxxx	AMC R/A Plug	MCX Str Blkhd Jack	1.37 mm	50
336503-08-xxxx	AMC R/A Plug	MCX Str Blkhd Jack	RG-178	50

AMC to N-Type

Part Number	Side 1	Side 2	Cable	Impedance
095-909-155xxxx	AMC R/A Plug	N-Type Str Blkhd Jack	RG-178	50

AMC to SMA

Part Number	Side 1	Side 2	Cable	Impedance
095-902-492xxxx	AMC R/A Plug	SMA R/A PCB Jack	1.13 mm	50
336313-12-xxxx	AMC R/A Plug	SMA Str Blkhd Jack	1.13 mm	50
336320-12-xxxx	AMC R/A Plug	SMA Str Blkhd Jack IP67	1.13 mm	50
336313-13-xxxx	AMC R/A Plug	SMA Str Blkhd Jack	1.32 mm	50
336313-14-xxxx	AMC R/A Plug	SMA Str Blkhd Jack	1.37 mm	50
336319-12-xxxx	AMC R/A Plug	SMA Str Blkhd Jack IP67	1.13 mm	50
336314-12-xxxx	AMC R/A Plug	SMA Str Blkhd Jack RP	1.13 mm	50
336314-13-xxxx	AMC R/A Plug	SMA Str Blkhd Jack RP	1.32 mm	50
336314-14-xxxx	AMC R/A Plug	SMA Str Blkhd Jack RP	1.37 mm	50

FIXED LENGTH CABLE ASSEMBLIES

AMC to Unterminated Blunt Cut

Part Number	Side 1	Side 2	Cable	Impedance
095-666-50056-x	AMC R/A Plug	Unterminated Blunt Cut	1.13 mm	50

AMC to TNC

Part Number	Side 1	Side 2	Cable	Impedance
336203-12-xxxx	AMC R/A Plug	TNC Str Blkhd Jack	1.13 mm	50
336206-12-xxxx	AMC R/A Plug	TNC Str Blkhd Jack RP	1.13 mm	50
336209-13-xxxx	AMC R/A Plug	TNC Str Blkhd Jack	1.32 mm	50
336209-12-xxxx	AMC R/A Plug	TNC Str Blkhd Jack IP67	1.13 mm	50
336212-12-xxxx	AMC R/A Plug	TNC Str Blkhd Jack IP67 RP	1.13 mm	50
336206-14-xxxx	AMC R/A Plug	TNC Str Blkhd Jack RP	1.37 mm	50

VIEW ALL AMC CABLE ASSEMBLIES

AMC4 ASSEMBLIES

AMC4 to SMA

Part Number	Side 1	Side 2	Cable	Impedance
095-902-488xxxx	AMC4 R/A Plug	SMA Str Blkhd Jack	1.13 mm	50
095-902-501xxxx	AMC4 R/A Plug	SMA Str Blkhd Jack RP	1.13 mm	50
095-902-502xxxx	AMC4 R/A Plug	SMA Str Blkhd Jack IP67	1.13 mm	50
095-902-503xxxx	AMC4 R/A Plug	SMA Str Blkhd Jack RP IP67	1.13 mm	50

VIEW ALL AMC4 CABLE ASSEMBLIES

AMMC ASSEMBLIES

AMMC to AMMC

Part Number	Side 1	Side 2	Cable	Impedance
A-2PA-113-xxxxx	AMMC R/A Plug	AMMC R/A Plug	1.13 mm	50
A-2PA-081-xxxxx	AMMC R/A Plug	AMMC R/A Plug	0.81 mm	50

VIEW ALL AMMC CABLE ASSEMBLIES

BNC ASSEMBLIES

BNC to 1.0/2.3

Part Number	Side 1	Side 2	Cable	Impedance
095-850-201xxxx	BNC Str Plug	1.0/2.3 Str Plug	RG-179	75

BNC to HD-BNC

Part Number	Side 1	Side 2	Cable	Impedance
095-666-44883-x	BNC Str Jack	HD-BNC Str Plug	Belden 1855A	75
095-666-44882-x	BNC Str Jack	HD-BNC Str Plug	Belden 1694A	75
095-850-192xxxx	BNC Str Jack	HD-BNC Str Plug	Belden 4794R	75
095-850-193xxxx	BNC Str Jack	HD-BNC Str Plug	Belden 4855R	75
095-850-162xxxx	BNC Str Plug	HD-BNC Str Plug	Belden 1505A	75
095-850-215xxxx	BNC Str Jack	HD-BNC Str Plug	Belden 4505R	75
095-850-216xxxx	BNC Str Jack	HD-BNC Str Plug	Belden 4694R	75
095-850-131xxxx	BNC Str Plug	HD-BNC Str Plug	Belden 1694A	75
095-850-189xxxx	BNC Str Plug	HD-BNC Str Plug	Belden 4855R	75
095-850-130xxxx	BNC Str Jack	HD-BNC Str Plug	Belden 1855A	75
095-850-217xxxx	BNC Str Plug	HD-BNC Str Plug	Belden 4505R	75
095-850-218xxxx	BNC Str Plug	HD-BNC Str Plug	Belden 4694R	75

FIXED LENGTH CABLE ASSEMBLIES

BNC to SMA

Part Number	Side 1	Side 2	Cable	Impedance
245101-07-xxxx	BNC Str Plug	SMA Str Plug	RG-142	50
245101-01-xxxx	BNC Str Plug	SMA Str Plug	RG-316	50
245101-04-xxxx	BNC Str Plug	SMA Str Plug	RG-58	50

BNC to SMB

Part Number	Side 1	Side 2	Cable	Impedance
245103-02-xxxx	BNC Str Plug	SMB 50 Ohm R/A Plug	RG-174	50

BNC to BNC

Part Number	Side 1	Side 2	Cable	Impedance
115103-15-xxxxx	BNC Str Plug	BNC R/A Plug	RG-59	75
095-850-165xxxx	BNC Str Plug	BNC Str Plug	Belden 1505A	75
095-850-166xxxx	BNC Str Plug	BNC Str Plug	Belden 1694A	75
115101-35-xxxxx	BNC Str Plug	BNC Str Plug	Belden 179DT	75
095-850-164xxxx	BNC Str Plug	BNC Str Plug	Belden 1855A	75
095-850-186xxxx	BNC Str Plug	BNC Str Plug	Belden 4794R	75
095-850-187xxxx	BNC Str Plug	BNC Str Plug	Belden 4855R	75
115101-06-xxxxx	BNC Str Plug	BNC Str Plug	Belden 8218	75
115101-30-xxxxx	BNC Str Plug	BNC Str Plug	LMR-100	50
115101-22-xxxxx	BNC Str Plug	BNC Str Plug	LMR-240	50
115101-07-xxxxx	BNC Str Plug	BNC Str Plug	RG-142	50
115101-02-xxxxx	BNC Str Plug	BNC Str Plug	RG-174	50
115101-05-xxxxx	BNC Str Plug	BNC Str Plug	RG-179	75
115101-01-xxxxx	BNC Str Plug	BNC Str Plug	RG-316	50
115101-19-xxxxx	BNC Str Plug	BNC Str Plug	RG-58	50
115101-20-xxxxx	BNC Str Plug	BNC Str Plug	RG-59	75
115104-15-xxxxx	BNC R/A Plug	BNC R/A Plug	RG-59	75
115103-04-xxxxx	BNC Str Plug	BNC R/A Plug	RG-58	50
115103-15-xxxxx	BNC Str Plug	BNC R/A Plug	RG-59	75

VIEW ALL BNC CABLE ASSEMBLIES

HD-BNC ASSEMBLIES

HD-BNC to 1.0/2.3

Part Number	Side 1	Side 2	Cable	Impedance
095-850-156xxxx	HD-BNC Str Plug	1.0/2.3 Str Plug	Belden 1505A	75
095-850-157xxxx	HD-BNC Str Plug	1.0/2.3 Str Plug	Belden 1694A	75
095-850-155xxxx	HD-BNC Str Plug	1.0/2.3 Str Plug	Belden 1855A	75

HD-BNC to HD-BNC

Part Number	Side 1	Side 2	Cable	Impedance
095-850-159xxxx	HD-BNC Str Plug	HD-BNC Str Plug	Belden 1505A	75
095-850-160xxxx	HD-BNC Str Plug	HD-BNC Str Plug	Belden 1694A	75
095-850-158xxxx	HD-BNC Str Plug	HD-BNC Str Plug	Belden 1855A	75
095-850-214xxxx	HD-BNC Str Plug	HD-BNC Str Plug	Belden 4794R	75
095-850-188xxxx	HD-BNC Str Plug	HD-BNC Str Plug	Belden 4855R	75
095-850-185xxxx	HD-BNC Str Plug	HD-BNC Str Plug	RG-316	50

FIXED LENGTH CABLE ASSEMBLIES

HD-BNC to BNC

Part Number	Side 1	Side 2	Cable	Impedance
095-666-44883-x	HD-BNC Str Plug	BNC Str Jack	Belden 1855A	75
095-666-44882-x	HD-BNC Str Plug	BNC Str Jack	Belden 1694A	75
095-850-215xxxx	HD-BNC Str Plug	BNC Str Jack	Belden 4505R	75
095-850-216xxxx	HD-BNC Str Plug	BNC Str Jack	Belden 4694R	75
095-850-192xxxx	HD-BNC Str Plug	BNC Str Jack	Belden 4794R	75
095-850-193xxxx	HD-BNC Str Plug	BNC Str Jack	Belden 4855R	75
095-850-162xxxx	HD-BNC Str Plug	BNC Str Plug	Belden 1505A	75
095-850-131xxxx	HD-BNC Str Plug	BNC Str Plug	Belden 1694A	75
095-850-130xxxx	HD-BNC Str Plug	BNC Str Plug	Belden 1855A	75
095-850-217xxxx	HD-BNC Str Plug	BNC Str Plug	Belden 4505R	75
095-850-218xxxx	HD-BNC Str Plug	BNC Str Plug	Belden 4694R	75
095-850-189xxxx	HD-BNC Str Plug	BNC Str Plug	Belden 4855R	75

VIEW ALL HD-BNC CABLE ASSEMBLIES

FAKRA ASSEMBLIES

FAKRA TO AMC

Part Number	Side 1	Side 2	Cable	Impedance
095-820-109xxxx	FAKRA Str Blkhd Plug IP67	AMC R/A Plug	1.37 mm	50

VIEW ALL FAKRA CABLE ASSEMBLIES

MCX ASSEMBLIES

MCX to MCX

Part Number	Side 1	Side 2	Cable	Impedance
255104-08-xxxxx	MCX R/A Plug	MCX R/A Plug	RG-178	50
255104-01-xxxxx	MCX R/A Plug	MCX R/A Plug	RG-316	50
255104-03-xxxxx	MCX R/A Plug	MCX R/A Plug	RG-316 DB	50
255103-01-xxxxx	MCX Str Plug	MCX R/A Plug	RG-316	50
255110-01-xxxxx	MCX Str Plug	MCX Str Blkhd Jack	RG-316	50
255101-08-xxxxx	MCX Str Plug	MCX Str Plug	RG-178	50
255101-05-xxxxx	MCX Str Plug	MCX Str Plug	RG-179	75
255101-01-xxxxx	MCX Str Plug	MCX Str Plug	RG-316	50

MCX to SMA

Part Number	Side 1	Side 2	Cable	Impedance
245130-01-xxxxx	MCX R/A Plug	SMA Str Blkhd Jack	RG-316	50

MCX to AMC

Part Number	Side 1	Side 2	Cable	Impedance
336503-12-xxxxx	MCX Str Blkhd Jack	AMC R/A Plug	1.13 mm	50
336503-13-xxxxx	MCX Str Blkhd Jack	AMC R/A Plug	1.32 mm	50
336503-14-xxxxx	MCX Str Blkhd Jack	AMC R/A Plug	1.37 mm	50
336503-08-xxxxx	MCX Str Blkhd Jack	AMC R/A Plug	RG-178	50

VIEW ALL MCX CABLE ASSEMBLIES

FIXED LENGTH CABLE ASSEMBLIES

MINI-SMB ASSEMBLIES

Mini-SMB to Mini-SMB

Part Number	Side 1	Side 2	Cable	Impedance
145104-05-xxxxx	Mini-SMB 75 Ohm R/A Plug	Mini-SMB 75 Ohm R/A Plug	RG-179	75
145111-05-xxxxx	Mini-SMB 75 Ohm R/A Plug	Mini-SMB 75 Ohm Str Plug	RG-179	75
145103-18-xxxxx	Mini-SMB 75 Ohm Str Plug	Mini-SMB 75 Ohm R/A Plug	RG-179 DB	75
145101-05-xxxxx	Mini-SMB 75 Ohm Str Plug	Mini-SMB 75 Ohm Str Plug	RG-179	75
145101-18-xxxxx	Mini-SMB 75 Ohm Str Plug	Mini-SMB 75 Ohm Str Plug	RG-179 DB	75

VIEW ALL MINI-SMB CABLE ASSEMBLIES

MMCX ASSEMBLIES

MMCX to MMCX

Part Number	Side 1	Side 2	Cable	Impedance
265104-08-xxxxx	MMCX R/A Plug	MMCX R/A Plug	RG-178	50
265104-01-xxxxx	MMCX R/A Plug	MMCX R/A Plug	RG-316	50
265103-08-xxxxx	MMCX Str Plug	MMCX R/A Plug	RG-178	50
265103-01-xxxxx	MMCX Str Plug	MMCX R/A Plug	RG-316	50
265101-08-xxxxx	MMCX Str Plug	MMCX Str Plug	RG-178	50

MMCX to SMA

Part Number	Side 1	Side 2	Cable	Impedance
245108-02-xxxxx	MMCX R/A Plug	SMA R/A Blkhd Jack	RG-174	50
245108-01-xxxxx	MMCX R/A Plug	SMA R/A Blkhd Jack	RG-316	50
245106-02-xxxxx	MMCX R/A Plug	SMA Str Blkhd Jack	RG-174	50
245106-01-xxxxx	MMCX R/A Plug	SMA Str Blkhd Jack	RG-316	50
245102-08-xxxxx	MMCX R/A Plug	SMA Str Blkhd Jack RP	RG-178	50
095-902-485xxx	MMCX R/A Plug	SMA Str Plug	RG-316	50
265101-01-xxxxx	MMCX R/A Plug	MMCX Str Plug	RG-316	50
245105-02-xxxxx	MMCX Str Plug	SMA R/A Blkhd Jack	RG-174	50
245107-02-xxxxx	MMCX Str Plug	SMA Str Blkhd Jack	RG-174	50

VIEW ALL MMCX CABLE ASSEMBLIES

N-TYPE ASSEMBLIES

N-Type to AMC

Part Number	Side 1	Side 2	Cable	Impedance
095-909-155xxxx	N-Type Str Blkhd Jack	AMC R/A Plug	RG-178	50

N-Type to N-Type

Part Number	Side 1	Side 2	Cable	Impedance
175101-R1-xxxxx	N-Type Str Plug	N-Type Str Plug	Conformable 0.085	50
175101-R2-xxxxx	N-Type Str Plug	N-Type Str Plug	Conformable 0.141	50
175101-21-xxxxx	N-Type Str Plug	N-Type Str Plug	LMR-195	50
175101-17-xxxxx	N-Type Str Plug	N-Type Str Plug	LMR-200	50
175101-22-xxxxx	N-Type Str Plug	N-Type Str Plug	LMR-240	50
175101-10-xxxxx	N-Type Str Plug	N-Type Str Plug	LMR-400	50
175101-07-xxxxx	N-Type Str Plug	N-Type Str Plug	RG-142	50
175101-19-xxxxx	N-Type Str Plug	N-Type Str Plug	RG-58	50

VIEW ALL N-TYPE CABLE ASSEMBLIES

FIXED LENGTH CABLE ASSEMBLIES

PROBE ASSEMBLIES

Probe to SMA

Part Number	Side 1	Side 2	Cable	Impedance
095-668-45097	Probe R/A Plug	SMA Str Plug	RG-178	50
095-668-45069-x	Probe R/A Plug	SMA Str Blkhd Jack	RG-178	50
095-902-4-27xxxx	Probe R/A Plug	SMA Str Plug	1.5D-2V	50

VIEW ALL PROBE CABLE ASSEMBLIES

SMA ASSEMBLIES

SMA to AMC

Part Number	Side 1	Side 2	Cable	Impedance
095-902-492xxxx	SMA R/A PCB Jack	AMC R/A Plug	1.13 mm	50
336313-12-xxxx	SMA Str Blkhd Jack	AMC R/A Plug	1.13 mm	50
336320-12-xxxx	SMA Str Blkhd Jack IP67	AMC R/A Plug	1.13 mm	50
336313-13-xxxxx	SMA Str Blkhd Jack	AMC R/A Plug	1.32 mm	50
336313-14-xxxxx	SMA Str Blkhd Jack	AMC R/A Plug	1.37 mm	50
336319-12-xxxxx	SMA Str Blkhd Jack IP67	AMC R/A Plug	1.13 mm	50
336314-12-xxxxx	SMA Str Blkhd Jack RP	AMC R/A Plug	1.13 mm	50
336314-13-xxxxx	SMA Str Blkhd Jack RP	AMC R/A Plug	1.32 mm	50
336314-14-xxxxx	SMA Str Blkhd Jack RP	AMC R/A Plug	1.37 mm	50

SMA to AMC4

Part Number	Side 1	Side 2	Cable	Impedance
095-902-488xxxx	SMA Str Blkhd Jack	AMC4 R/A Plug	1.13 mm	50
095-902-501xxxx	SMA Str Blkhd Jack RP	AMC4 R/A Plug	1.13 mm	50
095-902-502xxxx	SMA Str Blkhd Jack IP67	AMC4 R/A Plug	1.13 mm	50
095-902-503xxxx	SMA Str Blkhd Jack IP67	AMC4 R/A Plug	1.13 mm	50

SMA to MCX

Part Number	Side 1	Side 2	Cable	Impedance
245130-01-xxxxx	SMA Str Blkhd Jack	MCX R/A Plug	RG-316	50

SMA to MMCX

Part Number	Side 1	Side 2	Cable	Impedance
245108-02-xxxxx	SMA R/A Blkhd Jack	MMCX R/A Plug	RG-174	50
245108-01-xxxxx	SMA R/A Blkhd Jack	MMCX R/A Plug	RG-316	50
245105-02-xxxxx	SMA R/A Blkhd Jack	MMCX Str Plug	RG-174	50
245106-02-xxxxx	SMA Str Blkhd Jack	MMCX R/A Plug	RG-174	50
245106-01-xxxxx	SMA Str Blkhd Jack	MMCX R/A Plug	RG-316	50
095-902-485xxx	SMA Str Plug	MMCX R/A Plug	RG-316	50
245105-02-xxxxx	SMA R/A Blkhd Jack	MMCX Str Plug	RG-174	50
245107-02-xxxxx	SMA R/A Blkhd Jack	MMCX Str Plug	RG-174	50

SMA to Probe

Part Number	Side 1	Side 2	Cable	Impedance
095-668-45097	SMA Str Plug	Probe R/A Plug	RG-178	50
095-668-45069	SMA Str Blkhd Jack	Probe R/A Plug	RG-178	50
095-902-427xxxx	SMA Str Plug	Probe R/A Plug	1.5D-2V	50

FIXED LENGTH CABLE ASSEMBLIES

SMA to SMA

Part Number	Side 1	Side 2	Cable	Impedance
135104-R1-xxxxx	SMA R/A Plug	SMA R/A Plug	Conformable 0.085	50
095-902-478xxxx	SMA R/A Plug	SMA R/A Plug	LMR-195	50
095-902-482xxxx	SMA R/A Plug	SMA R/A Plug	LMR-240	50
135104-07-xxxxx	SMA R/A Plug	SMA R/A Plug	RG-142	50
135104-02-xxxxx	SMA R/A Plug	SMA R/A Plug	RG-174	50
135104-01-xxxxx	SMA R/A Plug	SMA R/A Plug	RG-316	50
135104-03-xxxxx	SMA R/A Plug	SMA R/A Plug	RG-316 DB	50
135104-04-xxxxx	SMA R/A Plug	SMA R/A Plug	RG-58	50
135107-04-xxxxx	SMA R/A Plug	SMA Str Jack	RG-58	50
135103-08-xxxxx	SMA R/A Plug	SMA Str Plug	RG-178	50
095-902-476xxxx	SMA Str Plug	SMA R/A Plug	LMR-195	50
095-902-480xxxx	SMA Str Plug	SMA R/A Plug	LMR-240	50
135103-07-xxxxx	SMA Str Plug	SMA R/A Plug	RG-142	50
135103-02-xxxxx	SMA Str Plug	SMA R/A Plug	RG-174	50
135103-01-xxxxx	SMA Str Plug	SMA R/A Plug	RG-316	50
135103-03-xxxxx	SMA Str Plug	SMA R/A Plug	RG-316 DB	50
135103-04-xxxxx	SMA Str Plug	SMA R/A Plug	RG-58	50
095-902-477xxxx	SMA Str Plug	SMA Str Blkhd Jack	LMR-195	50
095-902-481xxxx	SMA Str Plug	SMA Str Blkhd Jack	LMR-240	50
095-902-449xxxx	SMA Str Plug	SMA Str Plug	Conformable 0.085	50
135101-R1-xxxxx	SMA Str Plug	SMA Str Plug	Conformable 0.085	50
135106-R1-xxxxx	SMA Str Plug	SMA Str Jack	Conformable 0.085	50
095-902-450xxxx	SMA Str Plug	SMA Str Plug	Conformable 0.141	50
135101-R2-xxxxx	SMA Str Plug	SMA Str Plug	Conformable 0.141	50
095-902-475xxxx	SMA Str Plug	SMA Str Plug	LMR-195	50
095-902-479xxxx	SMA Str Plug	SMA Str Plug	LMR-240	50
135101-07-xxxxx	SMA Str Plug	SMA Str Plug	RG-142	50
135101-02-xxxxx	SMA Str Plug	SMA Str Plug	RG-174	50
135101-01-xxxxx	SMA Str Plug	SMA Str Plug	RG-316	50
135101-03-xxxxx	SMA Str Plug	SMA Str Plug	RG-316 DB	50
135101-04-xxxxx	SMA Str Plug	SMA Str Plug	RG-58	50
095-902-451xxxx	SMA Str Plug	SMA Str Plug	Tflex 405	50
135108-04-xxxxx	SMA Str Jack	SMA Str Jack	RG-58	50
135111-07-xxxxx	SMA Str Blkhd Jack	SMA R/A Plug	RG-142	50
135111-02-xxxxx	SMA Str Blkhd Jack	SMA R/A Plug	RG-174	50
135111-01-xxxxx	SMA Str Blkhd Jack	SMA R/A Plug	RG-316	50
135111-03-xxxxx	SMA Str Blkhd Jack	SMA R/A Plug	RG-316 DB	50
135111-04-xxxxx	SMA Str Blkhd Jack	SMA R/A Plug	RG-58	50
135110-07-xxxxx	SMA Str Blkhd Jack	SMA Str Plug	RG-142	50
135110-02-xxxxx	SMA Str Blkhd Jack	SMA Str Plug	RG-174	50
135110-01-xxxxx	SMA Str Blkhd Jack	SMA Str Plug	RG-316	50
135110-03-xxxxx	SMA Str Blkhd Jack	SMA Str Plug	RG-316 DB	50
135110-04-xxxxx	SMA Str Blkhd Jack	SMA Str Plug	RG-58	50

FIXED LENGTH CABLE ASSEMBLIES

SMA to SMP

Part Number	Side 1	Side 2	Cable	Impedance
095-902-459xxxx	SMA Str Plug	SMP Str Plug	Tflex 405	50

SMA to Unterminated

Part Number	Side 1	Side 2	Cable	Impedance
095-902-462xxxx	SMA Str Jack	Unterminated Blunt Cut	Conformable 0.047	50
095-902-463xxxx	SMA Str Jack	Unterminated Blunt Cut	Conformable 0.085	50
135100-01-xxxxx	SMA Str Plug	Unterminated Blunt Cut	RG-316	50

SMA to BNC

Part Number	Side 1	Side 2	Cable	Impedance
245101-07-xxxxx	SMA Str Plug	BNC Str Plug	RG-142	50
245101-01-xxxxx	SMA Str Plug	BNC Str Plug	RG-316	50
245101-04-xxxxx	SMA Str Plug	BNC Str Plug	RG-58	50

VIEW ALL SMA CABLE ASSEMBLIES

SMB ASSEMBLIES

SMB to BNC

Part Number	Side 1	Side 2	Cable	Impedance
245103-02-xxxxx	SMB 50 Ohm R/A Plug	BNC Str Plug	RG-174	50

SMB to SMB

Part Number	Side 1	Side 2	Cable	Impedance
145104-08-xxxxx	SMB 50 Ohm R/A Plug	SMB 50 Ohm R/A Plug	RG-178	50
145104-01-xxxxx	SMB 50 Ohm R/A Plug	SMB 50 Ohm R/A Plug	RG-316	50
145103-08-xxxxx	SMB 50 Ohm R/A Plug	SMB 50 Ohm Str Plug	RG-178	50
145103-01-xxxxx	SMB 50 Ohm Str Plug	SMB 50 Ohm R/A Plug	RG-316	50
145101-01-xxxxx	SMB 50 Ohm Str Plug	SMB 50 Ohm Str Plug	RG-316	50

VIEW ALL SMB CABLE ASSEMBLIES

SMP ASSEMBLIES

SMP to SMP

Part Number	Side 1	Side 2	Cable	Impedance
095-725-107xxxx	SMP Str Plug	SMP Str Plug	Tflex 405	50
095-725-108xxxx	SMP Str Plug	SMP Str Plug	Conformable 0.085	50

SMP to SMA

Part Number	Side 1	Side 2	Cable	Impedance
095-902-459xxxx	SMP Str Plug	SMA Str Plug	Tflex 405	50

VIEW ALL SMP CABLE ASSEMBLIES

SMPM ASSEMBLIES

SMPM to SMPM

Part Number	Side 1	Side 2	Cable	Impedance
095-725-112xxxx	SMPM Str Plug	SMPM Str Plug	Conformable 0.047	75
095-725-111xxxx	SMPM Str Plug	SMPM Str Plug	Conformable 0.085	50

VIEW ALL SMPM CABLE ASSEMBLIES

FIXED LENGTH CABLE ASSEMBLIES

TNC ASSEMBLIES

TNC to AMC				
Part Number	**Side 1**	**Side 2**	**Cable**	**Impedance**
336203-12-xxxxx	TNC Str Blkhd Jack	AMC R/A Plug	1.13 mm	50
336209-13-xxxxx	TNC Str Blkhd Jack	AMC R/A Plug	1.32 mm	50
336209-12-xxxxx	TNC Str Blkhd Jack IP67	AMC R/A Plug	1.13 mm	50
336212-12-xxxxx	TNC Str Blkhd Jack IP67 RP	AMC R/A Plug	1.13 mm	50
336206-14-xxxxx	TNC Str Blkhd Jack RP	AMC R/A Plug	1.37 mm	50
336206-12-xxxxx	TNC Str Blkhd Jack RP	AMC R/A Plug	1.13 mm	50

VIEW ALL TNC CABLE ASSEMBLIES

UNTERMINATED ASSEMBLIES

Unterminated to AMC				
Part Number	**Side 1**	**Side 2**	**Cable**	**Impedance**
095-666-50056-x	Unterminated Blunt Cut	AMC R/A Plug	1.13 mm	50

Unterminated to SMA				
Part Number	**Side 1**	**Side 2**	**Cable**	**Impedance**
095-902-462xxxx	Unterminated Blunt Cut	SMA Str Jack	Conformable 0.047	50
095-902-463xxxx	Unterminated Blunt Cut	SMA Str Jack	Conformable 0.085	50
135100-01-xxxx	Unterminated Blunt Cut	SMA Str Plug	RG-316	50

VIEW ALL UNTERMINATED CABLE ASSEMBLIES

COAXIAL ADAPTERS

Click on the ● to view all adapters in this category

	1.0/2.3	4.1/9.5	4.3/10	7/16	AFI	AMC	BNC	C-TYPE	FAKRA	FME	F-TYPE	G-TYPE	HD-BNC	HN-TYPE	MCX	MHV	MINI-SMB	MINI-UHF	MMCX	N-TYPE	PRECISION	PSMP	QMA	RP-N-TYPE	RP-SMA	RP-SMB	RP-TNC	SMA	SMB	SMC	SMP	SMPM	SSMA	SSMB	TNC	TRIAX	TWINAX	UHF
1.0/2.3							●						●							●								●										
4.1/9.5				●																●																		
4.3/10			●	●																●								●										
7/16		●	●	●																●								●										
AFI					●																							●										
AMC							●												●	●					●			●							●			
BNC	●					●	●			●	●		●		●					●								●							●			●
C-Type																				●																		
FAKRA																												●										
FME							●			●										●								●							●			●
F-Type							●				●									●									●									
G-Type												●																										
HD-BNC	●						●						●							●								●										
HN-Type														●						●																		
MCX							●								●					●								●							●			
MHV																●																						
Mini-SMB																	●																					
Mini-UHF																												●							●			●
MMCX						●													●	●					●			●										
N-Type	●	●	●	●		●	●	●		●	●		●	●	●				●	●				●	●		●	●	●						●			●
Precision																					●																	
PSMP																						●																
QMA																												●										
RP-N Type																				●				●														
RP-SMA						●													●	●					●			●										
RP-SMB																												●										
RP-TNC						●														●							●	●							●			
SMA	●		●	●	●	●	●		●	●			●		●			●	●	●			●		●	●	●	●	●	●	●		●	●	●			●
SMB											●									●								●	●	●								
SMC																												●	●	●								
SMP																												●			●							
SMPM																																●						
SSMA																												●										
SSMB																												●										
TNC						●	●			●					●			●		●							●	●										●
TRIAX																																				●		
TWINAX																																					●	
UHF							●			●								●		●								●							●			●

Tee-adapters available

COAXIAL ADAPTERS SERIES

1.0/2.3 ADAPTERS

DIN 1.0/2.3 products feature a patented ultra-slim push-pull coupling system which allows for quick installation and ensures positive locking and high retention. This series is available in 50 and 75 ohm configurations and operates from DC to 10 GHz. The compact design makes them ideal for applications with space constraints.

Part Number	Side 1	Side 2	Orientation	Impedance	Features
242229-75	1.0/2.3 Jack	BNC Jack	Straight	75	Bulkhead
242231-75	1.0/2.3 Jack	BNC Plug	Straight	75	Bulkhead
APH-HD-ISO-1023	1.0/2.3 Jack	HD-BNC Jack	Straight	75	Bulkhead, Isolated
242218	1.0/2.3 Jack	N-Type Jack	Straight	50	
901-10005	1.0/2.3 Jack	SMA Plug	Straight	50	
242207	1.0/2.3 Jack	SMA Plug	Straight	50	
242238-75	1.0/2.3 Plug	BNC Jack	Straight	75	
242217	1.0/2.3 Plug	N-Type Jack	Straight	50	
242179	1.0/2.3 Plug	SMA Jack	Straight	50	

VIEW ALL 1.0/2.3 ADAPTERS

4.1/9.5 ADAPTERS

The 4.1/9.5 series is a mechanically robust and high performance solution for wireless applications which require low passive intermodulation (PIM) and attenuation.

Part Number	Side 1	Side 2	Orientation	Impedance	Features
242281	4.1/9.5 Jack	N-Type Plug	Straight	50	
242277	4.1/9.5 Jack	7/16 Plug	Straight	50	
242282	4.1/9.5 Plug	N-Type Jack	Straight	50	
242278	4.1/9.5 Plug	7/16 Jack	Straight	50	

VIEW ALL 4.1/9.5 ADAPTERS

4.3/10 ADAPTERS

4.3/10 products offer the same robust design as 7/16 connectors but with a smaller footprint. Their lightweight design makes them ideal for wireless applications that require denser connector packing. This series is rated IP67 compliant and offers low passive intermodulation (PIM) and attenuation.

4.3/10 to 4.3/10					
Part Number	**Side 1**	**Side 2**	**Orientation**	**Impedance**	**Features**
AD-4310J4310J-2	4.3/10 Jack	4.3/10 Jack	Straight	50	Bulkhead
AD-4310J4310J-1	4.3/10 Jack	4.3/10 Jack	Straight	50	
AD-4310P4310J-2	4.3/10 Jack	4.3/10 Plug	Right Angle	50	
AD-4310P4310J-1	4.3/10 Jack	4.3/10 Plug	Straight	50	
AD-4310P4310P-1	4.3/10 Plug	4.3/10 Plug	Straight	50	

COAXIAL ADAPTERS SERIES

4.3/10 to 7/16

Part Number	Side 1	Side 2	Orientation	Impedance	Features
AD-716J4310J-1	4.3/10 Jack	7/16 Jack	Straight	50	
AD-716P4310J-1	4.3/10 Jack	7/16 Plug	Straight	50	
AD-716J4310P-1	4.3/10 Plug	7/16 Jack	Straight	50	
AD-716P4310P-1	4.3/10 Plug	7/16 Plug	Straight	50	

4.3/10 to N-Type

Part Number	Side 1	Side 2	Orientation	Impedance	Features
AD-4310JNJ-1	4.3/10 Jack	N-Type Jack	Straight	50	
AD-4310JNP-1	4.3/10 Jack	N-Type Plug	Straight	50	
AD-4310PNJ-1	4.3/10 Plug	N-Type Jack	Straight	50	
AD-4310PNP-1	4.3/10 Plug	N-Type Plug	Straight	50	

4.3/10 to SMA

Part Number	Side 1	Side 2	Orientation	Impedance	Features
AD-4310JSMAP-1	4.3/10 Jack	SMA Plug	Straight	50	
AD-4310PSMAJ-1	4.3/10 Plug	SMA Jack	Straight	50	

VIEW ALL 4.3/10 ADAPTERS

7/16 ADAPTERS

The 7/16 product series offers superior performance for both return loss and intermodulation distortion (IMD). These interconnects are robust and ideal for applications where vibration resistance and environmental protection is important. They are especially suitable for base stations and broadcast communication systems.

Part Number	Side 1	Side 2	Orientation	Impedance	Features
242278	7/16 Jack	4.1/9.5 Plug	Straight	50	
AD-716J4310J-1	7/16 Jack	4.3/10 Jack	Straight	50	
AD-716J4310P-1	7/16 Jack	4.3/10 Plug	Straight	50	
272301	7/16 Jack	7/16 Jack	Straight	50	Bulkhead
272300	7/16 Jack	7/16 Jack	Straight	50	
272292	7/16 Jack	7/16 Plug	Straight	50	
272150	7/16 Jack	7/16 Plug	Right Angle	50	
272183	7/16 Jack	N-Type Jack	Straight	50	Bulkhead
242137	7/16 Jack	N-Type Jack	Straight	50	
APH-716F-NF	7/16 Jack	N-Type Jack	Straight	50	
242135	7/16 Jack	N-Type Plug	Straight	50	
242266	7/16 Jack	SMA Plug	Straight	50	
242277	7/16 Plug	4.1/9.5 Jack	Straight	50	
AD-716P4310J-1	7/16 Plug	4.3/10 Jack	Straight	50	
AD-716P4310P-1	7/16 Plug	4.3/10 Plug	Straight	50	
272134	7/16 Plug	7/16 Plug	Straight	50	
242136	7/16 Plug	N-Type Jack	Straight	50	
APH-716M-NF	7/16 Plug	N-Type Jack	Straight	50	
242138	7/16 Plug	N-Type Plug	Straight	50	

VIEW ALL 7/16 ADAPTERS

COAXIAL ADAPTERS SERIES

AFI ADAPTERS

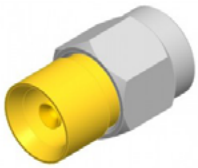

The AFI product series offers industry-leading “float” in order to compensate for axial and radial misalignment due to packaging tolerances. This series is a board-to-board solution designed for military and broadband applications.

Part Number	Side 1	Side 2	Orientation	Impedance	Features
APH-SMAF-AFIF	AFI Jack	SMA Jack	Straight	50	
APH-SMAP-AFIF	AFI Jack	SMA Plug	Straight	50	
APH-SMAF-AFIM	AFI Plug	SMA Jack	Straight	50	
920-169A-51S	AFI Plug	AFI Plug	Straight	50	
920-127A-71S	AFI Plug	AFI Plug	Straight	75	

VIEW ALL AFI ADAPTERS

AMC ADAPTERS

The AMC (Amphenol Micro Coaxial) product series is low profile (2.5 mm of the board) with an extremely small footprint (3 mm x 3 mm). This series utilizes a snap-on/snap-off connector style for secure and easy mating.

Part Number	Side 1	Side 2	Orientation	Impedance	Features
242225	AMC Jack	MMCX Jack	Straight	50	
242216	AMC Jack	N-Type Jack	Straight	50	Bulkhead
242201RP	AMC Jack	RP-SMA Jack	Straight	50	Bulkhead
242192RP	AMC Jack	RP-TNC Jack	Straight	50	Bulkhead
242201	AMC Jack	SMA Jack	Straight	50	Bulkhead
242212	AMC Jack	SMA Plug	Straight	50	
242259	AMC Jack	TNC Jack	Straight	50	4-Hole Flange
242192	AMC Jack	TNC Jack	Straight	50	Bulkhead
031-6109	AMC Plug	BNC Jack	Straight	50	Bulkhead
031-6112	AMC Plug	RP-TNC Jack	Straight	50	Bulkhead
031-6101	AMC Plug	RP-TNC Jack	Straight	50	2-Hole Flange
901-10175	AMC Plug	SMA Jack	Straight	50	Bulkhead
901-10097	AMC Plug	SMA Jack	Straight	50	Bulkhead
031-6208	AMC Plug	TNC Jack	Straight	50	Bulkhead

VIEW ALL AMC ADAPTERS

C-TYPE ADAPTERS

The C-Type series is designed for 50 ohm applications with a two-stud bayonet locking mechanism for quick and easy coupling. These products are weatherproof and ideal for outdoor applications.

Part Number	Side 1	Side 2	Orientation	Impedance	Features
082-508	C-Type Jack	N-Type Plug	Straight	50	

VIEW ALL C-TYPE ADAPTERS

COAXIAL ADAPTERS SERIES

BNC ADAPTERS

The BNC product series offers a diverse array of commercial and military grade options in terms of both configuration and termination style. The BNC features a bayonet coupling mechanism for positive, quick mating and un-mating. These miniature connectors are lightweight and reliable, and suited to accommodate PCB and cable-mount applications.

BNC to 1.0/2.3

Part Number	Side 1	Side 2	Orientation	Impedance	Features
242229-75	BNC Jack	1.0/2.3 Jack	Straight	75	Bulkhead
242238-75	BNC Jack	1.0/2.3 Plug	Straight	75	
242231-75	BNC Plug	1.0/2.3 Jack	Straight	75	Bulkhead

BNC to AMC

Part Number	Side 1	Side 2	Orientation	Impedance	Features
031-6109	BNC Jack	AMC Plug	Straight	50	Bulkhead

BNC to BNC

Part Number	Side 1	Side 2	Orientation	Impedance	Features
031-219 (UG-914/U)	BNC Jack	BNC Jack	Straight	50	
031-219-RFX	BNC Jack	BNC Jack	Straight	50	
112446	BNC Jack	BNC Jack	Straight	75	
112443	BNC Jack	BNC Jack	Straight	50	Isolated
112444	BNC Jack	BNC Jack	Straight	75	Isolated
112444-12G	BNC Jack	BNC Jack	Straight	75	Isolated, High-Frequency
031-220N	BNC Jack	BNC Jack	Straight	50	Bulkhead
031-220N-RFX	BNC Jack	BNC Jack	Straight	50	Bulkhead
031-70020	BNC Jack	BNC Jack	Straight	75	Bulkhead
112434	BNC Jack	BNC Jack	Straight	75	Bulkhead
031-220N-75-12G	BNC Jack	BNC Jack	Straight	75	Bulkhead
112712	BNC Jack	BNC Jack	Straight	50	4-Hole Flange
112446-12G	BNC Jack	BNC Jack	Straight	75	High-Frequency
031-4803	BNC Jack	BNC Jack	Straight	50	Isolated, Silver Contact
112438	BNC Jack	BNC Jack	Straight	75	Bulkhead
031-70540-12G	BNC Jack	HD-BNC Plug	Straight	75	
112668	BNC Plug	BNC Jack	Straight	75	
031-9 (UG-306/U)	BNC Plug	BNC Jack	Right Angle	50	
031-9-RFX	BNC Plug	BNC Jack	Right Angle	50	
031-9-75	BNC Plug	BNC Jack	Right Angle	75	
031-9-75-12G	BNC Plug	BNC Jack	Right Angle	75	High-Frequency
031-9-75RFX	BNC Plug	BNC Jack	Right Angle	75	
112667	BNC Plug	BNC Jack	Straight	50	
031-218 (UG-491A/U)	BNC Plug	BNC Plug	Straight	50	
031-218-75RFX	BNC Plug	BNC Plug	Straight	75	
112448	BNC Plug	BNC Plug	Straight	75	
031-218-75RFX-12G	BNC Plug	BNC Plug	Straight	75	High-Frequency
031-218-RFX	BNC Plug	BNC Plug	Straight	50	
112655	BNC Plug	BNC Plug	Right Angle	50	Right Angle
031-70541-12G	BNC Plug	HD-BNC Jack	Straight	75	

COAXIAL ADAPTERS SERIES

BNC to FME

Part Number	Side 1	Side 2	Orientation	Impedance	Features
192104	BNC Plug	FME Plug	Straight	50	

BNC to F-Type

Part Number	Side 1	Side 2	Orientation	Impedance	Features
242161	BNC Jack	F-Type Jack	Straight	75	
242159	BNC Jack	F-Type Plug	Straight	75	
242154	BNC Plug	F-Type Jack	Straight	75	
112532-12-1	BNC Plug	F-Type Jack	Straight	75	Bulkhead
242160	BNC Plug	F-Type Plug	Straight	50	

BNC to HD-BNC

Part Number	Side 1	Side 2	Orientation	Impedance	Features
APH-HD-ISO-BNC	BNC Jack	HD-BNC Jack	Straight	75	Bulkhead, Isolated
APH-BNCJ-HDBNCJ	BNC Jack	HD-BNC Jack	Straight	75	
APH-BNCJ-HDBNCP	BNC Jack	HD-BNC Plug	Straight	75	
APH-BNCP-HDBNCJ	BNC Plug	HD-BNC Jack	Straight	75	
APH-BNCP-HDBNCP	BNC Plug	HD-BNC Plug	Straight	75	

BNC to MCX

Part Number	Side 1	Side 2	Orientation	Impedance	Features
242206	BNC Jack	MCX Jack	Straight	50	
242204	BNC Jack	MCX Plug	Straight	50	
242203	BNC Plug	MCX Jack	Straight	50	
242205	BNC Plug	MCX Plug	Straight	50	

BNC to N-Type

Part Number	Side 1	Side 2	Orientation	Impedance	Features
APH-NJ-BNCJ	BNC Jack	N-Type Jack	Straight	50	
082-6532	BNC Jack	N-Type Jack	Straight	50	Bulkhead, IP67
242162	BNC Jack	N-Type Jack	Straight	50	Bulkhead
242100	BNC Jack	N-Type Jack	Straight	50	
APH-NP-BNCJ	BNC Jack	N-Type Plug	Straight	50	
031-216-RFX	BNC Jack	N-Type Plug	Straight	50	
031-216	BNC Jack	N-Type Plug	Straight	50	
082-5558	BNC Jack	N-Type Plug	Straight	50	
242121	BNC Jack	N-Type Plug	Straight	50	
APH-NJ-BNCP	BNC Plug	N-Type Jack	Straight	50	
031-217-RFX	BNC Plug	N-Type Jack	Straight	50	
031-217	BNC Plug	N-Type Jack	Straight	50	
242101	BNC Plug	N-Type Jack	Straight	50	
APH-NP-BNCP	BNC Plug	N-Type Plug	Straight	50	
242122	BNC Plug	N-Type Plug	Straight	50	

COAXIAL ADAPTERS SERIES

BNC to SMA

Part Number	Side 1	Side 2	Orientation	Impedance	Features
901-9173	BNC Jack	SMA Jack	Straight	50	Bulkhead
901-167	BNC Jack	SMA Jack	Straight	50	
901-10384	BNC Jack	SMA Jack	Straight	50	Bulkhead, IP67
242181	BNC Jack	SMA Jack	Straight	50	Bulkhead
242123	BNC Jack	SMA Jack	Straight	50	
901-166	BNC Jack	SMA Plug	Straight	50	
242102	BNC Jack	SMA Plug	Straight	50	
901-165	BNC Plug	SMA Jack	Straight	50	
242103	BNC Plug	SMA Jack	Straight	50	
132375	BNC Plug	SMA Jack	Straight	50	Bulkhead
901-164	BNC Plug	SMA Plug	Straight	50	
242104	BNC Plug	SMA Plug	Straight	50	

BNC to SMB

Part Number	Side 1	Side 2	Orientation	Impedance	Features
242186	BNC Jack	SMA Jack	Straight	50	
242185	BNC Jack	SMA Plug	Straight	50	
242184	BNC Plug	SMA Jack	Straight	50	
242187	BNC Plug	SMA Plug	Straight	50	

BNC to TNC

Part Number	Side 1	Side 2	Orientation	Impedance	Features
242150	BNC Jack	TNC Jack	Straight	50	
APH-BNCJ-TNCJ	BNC Jack	TNC Jack	Straight	50	
000-79675	BNC Jack	TNC Plug	Straight	50	
242232	BNC Jack	TNC Plug	Right Angle	50	
242149	BNC Jack	TNC Plug	Straight	50	
APH-BNCJ-TNCP	BNC Jack	TNC Plug	Straight	50	
000-79025	BNC Plug	TNC Jack	Straight	50	
242148	BNC Plug	TNC Jack	Straight	50	
242151	BNC Plug	TNC Plug	Straight	50	
APH-BNCP-TNCP	BNC Plug	TNC Plug	Straight	50	

BNC to UHF

Part Number	Side 1	Side 2	Orientation	Impedance	Features
242165	BNC Jack	UHF Jack	Straight	50	
031-28-RFX	BNC Jack	UHF Plug	Straight	50	
031-28	BNC Jack	UHF Plug	Straight	50	
242164	BNC Jack	UHF Plug	Straight	50	
000-2900	BNC Plug	UHF Jack	Straight	50	
242134	BNC Plug	UHF Jack	Straight	50	

VIEW ALL BNC ADAPTERS

COAXIAL ADAPTERS SERIES

FAKRA ADAPTERS

FAKRA products are designed specifically for automotive applications according to USCAR standards. This series features color coded housings and mechanical keying to prevent mis-mating and are available in sealed, high-speed and 6 GHz options.

Part Number	Side 1	Side 2	Orientation	Impedance	Features
APH-FKJ-SMAJ	FAKRA Jack	SMA Jack	Straight	50	

VIEW ALL FAKRA ADAPTERS

FME ADAPTERS

The FME product series offers excellent VSWR performance from DC to 200 MHz. These products are ideal for mobile antenna applications and are primarily used with RG-58 coaxial cables.

Part Number	Side 1	Side 2	Orientation	Impedance	Features
192104	FME Plug	BNC Plug	Straight	50	
192103	FME Plug	FME Plug	Straight	50	
192109	FME Plug	N-Type Plug	Straight	50	
192113	FME Plug	SMA Plug	Straight	50	
192105	FME Plug	TNC Plug	Straight	50	
192110	FME Plug	UHF Plug	Straight	50	

VIEW ALL FME ADAPTERS

F-TYPE ADAPTERS

The F-Type product series is a high-performance, threaded alternative to the traditional slide-on G-Type connector design. Primary applications for F-Type connectors are able television (CATV), set top boxes and cable modems.

Part Number	Side 1	Side 2	Orientation	Impedance	Features
242161	F-Type Jack	BNC Jack	Straight	75	
242154	F-Type Jack	BNC Plug	Straight	75	
112532-12-1	F-Type Jack	BNC Plug	Straight	75	Push-On Plug, Bulkhead
531-40008	F-Type Jack	F-Type Jack	Straight	75	
222121	F-Type Jack	F-Type Jack	Straight	75	Bulkhead
222205	F-Type Jack	F-Type Plug	Straight	75	
222157	F-Type Jack	F-Type Plug	Straight	75	Push-On Plug
222F-90	F-Type Jack	F-Type Plug	Right Angle	75	
242120	F-Type Jack	N-Type Jack	Straight	50	
242120-75	F-Type Jack	N-Type Jack	Straight	75	
252156	F-Type Jack	N-Type Plug	Straight	50	
242224	F-Type Jack	SMB Jack	Straight	50	Bulkhead
242215	F-Type Jack	SMB Jack	Straight	75	Bulkhead
242223	F-Type Jack	SMB Plug	Straight	50	Bulkhead
242159	F-Type Plug	BNC Jack	Straight	75	
242160	F-Type Plug	BNC Plug	Straight	50	
222156	F-Type Plug	F-Type Plug	Straight	75	Bulkhead
242152	F-Type Plug	N-Type Jack	Straight	50	
242152-75	F-Type Plug	N-Type Jack	Straight	75	
242157	F-Type Plug	N-Type Plug	Straight	50	

VIEW ALL F-TYPE ADAPTERS

COAXIAL ADAPTERS SERIES

G-TYPE ADAPTERS

The G-Type product series is a 75 ohm solution ideal for cable television (CATV), set top boxes and cable models. This series is a traditional slide-on alternative to the threaded F-Type connector.

Part Number	Side 1	Side 2	Orientation	Impedance	Features
531-40119	G-Type Plug	G-Type Plug	Straight	75	Bulkhead

VIEW ALL G-TYPE ADAPTERS

HD-BNC ADAPTERS

The HD-BNC product line features the trusted push and turn interface of a traditional BNC but with a footprint that is 4 times smaller. These products are engineered to enhance electrical and mechanical performance and use the same prep and termination specifications of legacy broadcast connectors.

Part Number	Side 1	Side 2	Orientation	Impedance	Features
031-70541-12G	HD-BNC Jack	BNC Plug	Straight	75	
APH-HD-ISO-1023	HD-BNC Jack	1.0/2.3 Jack	Straight	75	Bulkhead, Isolated
APH-BNCJ-HDBNCJ	HD-BNC Jack	BNC Jack	Straight	75	
APH-HD-ISO-BNC	HD-BNC Jack	BNC Jack	Straight	75	Bulkhead, Isolated
APH-BNCP-HDBNCJ	HD-BNC Jack	BNC Plug	Straight	75	
APH-HD-ISO-HD	HD-BNC Jack	HD-BNC Jack	Straight	75	Bulkhead, Isolated
APH-HDBNCJ-J	HD-BNC Jack	HD-BNC Jack	Straight	75	
034-1109-12G	HD-BNC Jack	HD-BNC Jack	Straight	75	Bulkhead
034-1110-12G	HD-BNC Jack	HD-BNC Jack	Straight	75	Bulkhead, Isolated
034-1112-12G	HD-BNC Jack	HD-BNC Jack	Right-Angle	75	
APH-HDBNCP-J	HD-BNC Jack	HD-BNC Plug	Straight	75	
031-1111-12G	HD-BNC Jack	HD-BNC Plug	Straight	75	
APH-NJ-HDBNCJ	HD-BNC Jack	N-Type Jack	Straight	75	
APH-NP-HDBNCJ	HD-BNC Jack	N-Type Plug	Straight	75	
APH-HDBNCJ-SMAJ	HD-BNC Jack	SMA Jack	Straight	50	
031-70540-12G	HD-BNC Plug	BNC Jack	Straight	75	
APH-BNCJ-HDBNCP	HD-BNC Plug	BNC Jack	Straight	75	
APH-BNCP-HDBNCP	HD-BNC Plug	BNC Plug	Straight	75	
034-1113-12G	HD-BNC Plug	HD-BNC Plug	Straight	75	
APH-NJ-HDBNCP	HD-BNC Plug	N-Type Jack	Straight	75	
APH-NP-HDBNCP	HD-BNC Plug	N-Type Plug	Straight	75	
APH-HDBNCP-SMAJ	HD-BNC Plug	SMA Jack	Straight	50	
APH-HDBNCP-SMAP	HD-BNC Plug	SMA Plug	Straight	50	

VIEW ALL HD-BNC ADAPTERS

HD-EFI ADAPTERS

The HD-EFI product series is a micro-miniature board-to-board solutions designed to allow large board tolerance stack ups, blind mating, and multiple RF lines. HD-EFI interconnects are available in a variety of configurations and has a generous “float” to compensate for radial and axial misalignment. The HD-EFI is ideal for high-performance applications with a small package size.

Part Number	Side 1	Side 2	Orientation	Impedance	Features
920-505A-51S	HD-EFI Plug	HD-EFI Plug	Straight	50	
920-506A-51S	HD-EFI Plug	HD-EFI Plug	Straight	50	
920-509A-51S	HD-EFI Plug	HD-EFI Plug	Straight	50	
AD-SMAJHDEFIP-1	HD-EFI Plug	SMA Plug	Straight	50	
AD-SMAJHDEFIJ-1	HD-EFI Plug	SMA Jack	Straight	50	

VIEW ALL HD-EFI ADAPTERS

COAXIAL ADAPTERS SERIES

HN-TYPE ADAPTERS

The HN-Type product line features medium sized, weatherproof units designed for high voltage applications. These products are designed with a captivated contact to prevent contact recession under extreme temperatures and mechanical stresses.

Part Number	Side 1	Side 2	Orientation	Impedance	Features
000-11050 (UG-1019/U)	HN-Type Jack	HN-Type Jack	Straight	50	
000-16075	HN-Type Jack	N-Type Plug	Straight	50	
000-16050	HN-Type Plug	N-Type Jack	Straight	50	

VIEW ALL HN-TYPE ADAPTERS

MCX ADAPTERS

The MCX (Micro Coaxial) series is a 50 ohm series with broadband capabilities ranging from DC to 6 GHz. This series features secure, fast and easy snap-on/snap-off coupling and are ideal for applications where weight and physical space are limited.

Part Number	Side 1	Side 2	Orientation	Impedance	Features
242206	MCX Jack	BNC Jack	Straight	50	
242203	MCX Jack	BNC Plug	Straight	50	
252171	MCX Jack	MCX Jack	Straight	50	Bulkhead
252169	MCX Jack	MCX Jack	Straight	50	
242172	MCX Jack	N-Type Jack	Straight	50	
242170	MCX Jack	N-Type Plug	Straight	50	
242129	MCX Jack	SMA Jack	Straight	50	
242126	MCX Jack	SMA Plug	Straight	50	
242208	MCX Jack	TNC Plug	Straight	50	
242204	MCX Plug	BNC Jack	Straight	50	
242205	MCX Plug	BNC Plug	Straight	50	
242171	MCX Plug	N-Type Jack	Straight	50	
APH-SMAJ-MCXP	MCX Plug	SMA Jack	Straight	50	
242234	MCX Plug	SMA Jack	Straight	50	2-Hole Flange
242127	MCX Plug	SMA Jack	Straight	50	
242128	MCX Plug	SMA Plug	Straight	50	
242210	MCX Plug	TNC Plug	Straight	50	

VIEW ALL MCX ADAPTERS

MHV ADAPTERS

The MHV product series features bayonet locking interconnects used for high voltage applications up to 5000 volts. These products off a quick-connect functionality that is used where transmission of high voltage is required.

Part Number	Side 1	Side 2	Orientation	Impedance	Features
000-12650	MHV Jack	MHV Jack	Straight	Non-Constant	4-Hole Flange

VIEW ALL MHV ADAPTERS

MINI-SMB ADAPTERS

Amphenol RF's Mini-SMB connector family provides broadband capabilities up to 2 GHz. Their simple snap-on design offers a quick connect/disconnect and utilizes die cast components in non-critical areas to provide a low cost solution. These products also feature reduced housing which allows for circuit miniaturization and efficient space utilization.

Part Number	Side 1	Side 2	Orientation	Impedance	Features
142249-75	Mini-SMB Jack	Mini-SMB Jack	Straight	75	Bulkhead

VIEW ALL MINI-SMB ADAPTERS

COAXIAL ADAPTERS SERIES

MINI-UHF ADAPTERS

Miniature versions of UHF connectors, Mini-UHF connectors are designed for applications where size, weight, and cost factors are critical. With a miniature 3/8-24 thread size, these connectors provides excellent RF performance for applications up to 2.5 GHz. Connectors in this series terminate are available as crimp-type cable plugs and jacks, terminating to various cable types, and as panel and printed circuit board receptacles.

Part Number	Side 1	Side 2	Orientation	Impedance	Features
242119	Mini-UHF Jack	SMA Jack	Straight	50	Bulkhead
242116	Mini-UHF Jack	SMA Plug	Straight	50	
242197	Mini-UHF Jack	TNC Plug	Straight	50	
242117	Mini-UHF Plug	SMA Jack	Straight	50	
242242	Mini-UHF Plug	TNC Jack	Straight	50	
242153	Mini-UHF Plug	TNC Jack	Straight	50	

VIEW ALL MINI-UHF ADAPTERS

MMCX ADAPTERS

The MMCX (Micro-Miniature Coaxial) product series is a micro-miniature version of the MCX. It has all the same features and benefits of the traditional MCX, but with a smaller footprint.

Part Number	Side 1	Side 2	Orientation	Impedance	Features
242225	MMCX Jack	AMC Jack	Straight	50	
262130	MMCX Jack	MMCX Jack	Straight	50	Bulkhead
262129	MMCX Jack	MMCX Jack	Straight	50	
262136	MMCX Jack	MMCX Plug	Straight	50	
242168	MMCX Jack	N-Type Jack	Straight	50	
242166	MMCX Jack	N-Type Plug	Straight	50	
242237	MMCX Jack	SMA Jack	Straight	50	Bulkhead
242143	MMCX Jack	SMA Jack	Straight	50	
242140	MMCX Jack	SMA Plug	Straight	50	
242169	MMCX Plug	N-Type Plug	Straight	50	
242141RP	MMCX Plug	RP-SMA Jack	Straight	50	
242193	MMCX Plug	SMA Jack	Straight	50	Bulkhead
242141	MMCX Plug	SMA Jack	Straight	50	
242142	MMCX Plug	SMA Plug	Straight	50	

VIEW ALL MMCX ADAPTERS

N-TYPE ADAPTERS

The N-Type product series is a durable, medium sized, weatherproof solution for military, industrial and commercial applications. The threaded coupling mechanism featured on all N-Type products is ideal for vibration resistance.

Part Number	Side 1	Side 2	Orientation	Impedance	Features
082-101 (UG-29B/U)	N-Type Jack	N-Type Jack	Straight	50	
172123	N-Type Jack	N-Type Jack	Straight	50	
082-6348	N-Type Jack	N-Type Jack	Straight	50	Bulkhead
082-66 (UG-30/U)	N-Type Jack	N-Type Jack	Straight	50	Bulkhead, IP67
082-66-RFX	N-Type Jack	N-Type Jack	Straight	50	Bulkhead
172124	N-Type Jack	N-Type Jack	Straight	50	Bulkhead
172278-10	N-Type Jack	N-Type Jack	Straight	50	4-Hole Flange

COAXIAL ADAPTERS SERIES

Part Number	Side 1	Side 2	Orientation	Impedance	Features
172276	N-Type Jack	N-Type Plug	Straight	50	
172336	N-Type Jack	N-Type Plug	Straight	50	Bulkhead
172126	N-Type Jack	N-Type Plug	Right Angle	50	
082-64 (UG-27A/U)	N-Type Jack	N-Type Plug	Right Angle	50	
172212RP	N-Type Jack	N-Type Plug	Straight	50	Reverse Polarity
082-100 (UG-57B/U)	N-Type Plug	N-Type Plug	Straight	50	
172122	N-Type Plug	N-Type Plug	Straight	50	
172261	N-Type Plug	N-Type Plug	Right Angle	50	

VIEW ALL N-TYPE ADAPTERS

PRECISION ADAPTERS

Industry-leading float results in a maximum misalignment allowed by the system of .030" [0.8 mm] radial and .040" [1.0 mm] axial. Available in two configurations: 75 Ω with a performance of DC to 3 GHz and 50 ff with a performance of DC to 6 GHz.

Part Number	Side 1	Side 2	Orientation	Impedance	Features
131-7020	APC-N Jack	3.5mm Jack	Straight	50	
131-7018	APC-N Plug	3.5mm Jack	Straight	50	
131-91046	APC-7	3.5mm Jack	Straight	50	

VIEW ALL PRECISION ADAPTERS

PSMP ADAPTERS

The PSMP product series is a board-to-board solution ideal for blind mate applications requiring high power. With a minimum board spacing of 12.6 mm, the three-piece design allows maximum flexibility for high-density board spacing.

Part Number	Side 1	Side 2	Orientation	Impedance	Features
PSMP-FSBA-2580	PSMP Plug	PSMP Plug	Straight	50	
PSMP-FSBA-2380	PSMP Plug	PSMP Plug	Straight	50	
PSMP-FSBA-1970	PSMP Plug	PSMP Plug	Straight	50	
PSMP-FSBA-1755	PSMP Plug	PSMP Plug	Straight	50	
PSMP-FSBA-1175	PSMP Plug	PSMP Plug	Straight	50	
PSMP-FSBA-1042	PSMP Plug	PSMP Plug	Straight	50	
PSMP-FSBA-1000	PSMP Plug	PSMP Plug	Straight	50	

VIEW ALL PSMP ADAPTERS

QMA ADAPTERS

The QMA product series is a quick disconnect version of the SMA connector with the same internal construction. These products are ideal for applications requiring high power handling capabilities.

Part Number	Side 1	Side 2	Orientation	Impedance	Featur
242262	QMA Jack	SMA Jack	Straight	50	
930-100A-51S	QMA Jack	SMA Jack	Straight	50	
242263	QMA Jack	SMA Plug	Straight	50	
242261	QMA Plug	SMA Jack	Straight	50	
930-101A-51S	QMA Plug	SMA Jack	Straight	50	
242260	QMA Plug	SMA Plug	Straight	50	

VIEW ALL QMA ADAPTERS

COAXIAL ADAPTERS SERIES

RP-N TYPE ADAPTERS

The N-Type product series is a durable, medium sized, weatherproof solution for military, industrial and commercial applications. The threaded coupling mechanism featured on all N-Type products is ideal for vibration resistance. N-Type interconnects are produced in standard and reverse polarity.

Part Number	Side 1	Side 2	Orientation	Impedance	Features
172213RP	RP-N-Type Jack	N-Type Plug	Straight	50	Bulkhead
172212RP	RP-N-Type Plug	N-Type Plug	Straight	50	
172193RP-RP	RP-N-Type Plug	RP-N-Type Jack	Right Angle	50	

VIEW ALL RP-N TYPE ADAPTERS

RP-SMA ADAPTERS

The SMA product series is designed using a threaded interface and provides excellent electrical performance from DC to 26.5 GHz, along with outstanding mechanical durability. SMA interconnects offer a precise and simple means of phase adjustment for microwave devices. The products are available in standard and reverse polarity.

Part Number	Side 1	Side 2	Orientation	Impedance	Features
242201RP	RP-SMA Jack	AMC Jack	Straight	50	Bulkhead
242141RP	RP-SMA Jack	MMCX Jack	Straight	50	
242115RP	RP-SMA Jack	N-Type Jack	Straight	50	
242113RP	RP-SMA Jack	N-Type Plug	Straight	50	
132169RP-RP	RP-SMA Jack	RP-SMA Jack	Straight	50	
132170-10RP-RP	RP-SMA Jack	RP-SMA Jack	Straight	50	Bulkhead
132171RP-RP	RP-SMA Jack	RP-SMA Plug	Straight	50	
132172RP-RP	RP-SMA Jack	RP-SMA Plug	Right Angle	50	
132170RP	RP-SMA Jack	SMA Jack	Straight	50	Bulkhead
132169RP	RP-SMA Jack	SMA Jack	Straight	50	
132172RP	RP-SMA Jack	SMA Plug	Right Angle	50	
132171RP	RP-SMA Jack	SMA Plug	Straight	50	
242112RP	RP-SMA Plug	N-Type Jack	Straight	50	
242114RP	RP-SMA Plug	N-Type Plug	Straight	50	
132171RP-10	RP-SMA Plug	SMA Jack	Straight	50	
132168RP	RP-SMA Plug	SMA Plug	Straight	50	

VIEW ALL RP-SMA ADAPTERS

RP-SMB ADAPTERS

The SMB product series features a snap-on coupling mechanism and is available in 50 and 75 ohm configurations. These interconnects offer broadband performance with low reflection from DC to 4 GHz and utilize die cast components on non-critical areas to provide a low cost solution. SMB products are engineered in both standard and reverse polarity.

Part Number	Side 1	Side 2	Orientation	Impedance	Features
242145RP	RP-SMB Plug	SMA Jack	Straight	50	

VIEW ALL RP-SMB ADAPTERS

COAXIAL ADAPTERS SERIES

RP-TNC ADAPTERS

The TNC product series features a micro-miniature, threaded and waterproof design. The durable construction makes them ideal for vibration intense applications. TNC interconnects are produced with standard and reverse polarity.

Part Number	Side 1	Side 2	Orientation	Impedance	Features
242192RP	RP-TNC Jack	AMC Jack	Straight	50	Bulkhead
031-6112	RP-TNC Jack	AMC Plug	Straight	50	Bulkhead
031-6101	RP-TNC Jack	AMC Plug	Straight	50	2-Hole Flange
242132RP	RP-TNC Jack	N-Type Jack	Straight	50	
242130RP	RP-TNC Jack	N-Type Plug	Straight	50	
122352RP-RP	RP-TNC Jack	RP-TNC Plug	Right Angle	50	
242107RP	RP-TNC Jack	SMA Jack	Straight	50	
242124RP	RP-TNC Jack	SMA Plug	Straight	50	
122498RP-10	RP-TNC Jack	TNC Plug	Straight	50	
242131RP	RP-TNC Plug	N-Type Jack	Straight	50	
242133RP	RP-TNC Plug	N-Type Plug	Straight	50	
242105RP-10	RP-TNC Plug	SMA Jack	Straight	50	
242105RP	RP-TNC Plug	SMA Jack	Straight	50	
242106RP	RP-TNC Plug	SMA Plug	Straight	50	
122498RP	RP-TNC Plug	TNC Jack	Straight	50	
122458RP-RP	RP-TNC Jack	TNC RP-Jack	Straight	50	Bulkhead

VIEW ALL RP-TNC ADAPTERS

SMA ADAPTERS

The SMA product series is designed using a threaded interface and provides excellent electrical performance from DC to 26.5 GHz, along with outstanding mechanical durability. SMA interconnects offer a precise and simple means of phase adjustment for microwave devices.

SMA to 1.0/2.3

Part Number	Side 1	Side 2	Orientation	Impedance	Features
242179	SMA Jack	1.0/2.3 Plug	Straight	50	
242207	SMA Plug	1.0/2.3 Jack	Straight	50	
901-10005	SMA Plug	1.0/2.3 Jack	Straight	50	

SMA to 4.3/10

Part Number	Side 1	Side 2	Orientation	Impedance	Features
AD-4310PSMAJ-1	SMA Jack	4.3/10 Plug	Straight	50	
AD-4310JSMAP-1	SMA Plug	4.3/10 Jack	Straight	50	

SMA to 7/16

Part Number	Side 1	Side 2	Orientation	Impedance	Features
242266	SMA Plug	7/16 Jack	Straight	50	

SMA to AFI

Part Number	Side 1	Side 2	Orientation	Impedance	Features
APH-SMAF-AFIF	SMA Jack	AFI Jack	Straight	50	
APH-SMAF-AFIM	SMA Jack	AFI Plug	Straight	50	
APH-SMAP-AFIF	SMA Plug	AFI Jack	Straight	50	

COAXIAL ADAPTERS SERIES

SMA to AMC

Part Number	Side 1	Side 2	Orientation	Impedance	Features
242201	SMA Jack	AMC Jack	Straight	50	Bulkhead
901-10097	SMA Jack	AMC Plug	Straight	50	Bulkhead
901-10175	SMA Jack	AMC Plug	Straight	50	Bulkhead
242212	SMA Plug	AMC Jack	Straight	50	

SMA to BNC

Part Number	Side 1	Side 2	Orientation	Impedance	Features
242123	SMA Jack	BNC Jack	Straight	50	
242181	SMA Jack	BNC Jack	Straight	50	Bulkhead
242181-10	SMA Jack	BNC Jack	Straight	50	Bulkhead
901-10384	SMA Jack	BNC Jack	Straight	50	Bulkhead, IP67
901-167	SMA Jack	BNC Jack	Straight	50	
901-9173	SMA Jack	BNC Jack	Straight	50	Bulkhead
132375	SMA Jack	BNC Plug	Straight	50	Bulkhead
242103	SMA Jack	BNC Plug	Straight	50	
901-165	SMA Jack	BNC Plug	Straight	50	
242102	SMA Jack	BNC Jack	Straight	50	
901-166	SMA Plug	BNC Jack	Straight	50	
242104	SMA Plug	BNC Plug	Straight	50	
901-164	SMA Plug	BNC Plug	Straight	50	

SMA to FAKRA

Part Number	Side 1	Side 2	Orientation	Impedance	Features
APH-FKJ-SMAJ	SMA Jack	FAKRA Jack	Straight	50	

SMA to FME

Part Number	Side 1	Side 2	Orientation	Impedance	Features
192113	SMA Plug	FME Plug	Straight	50	

SMA to HD-BNC

Part Number	Side 1	Side 2	Orientation	Impedance	Features
APH-HDBNCJ-SMAJ	SMA Jack	HD-BNC Jack	Straight	50	
APH-HDBNCP-SMAJ	SMA Jack	HD-BNC Plug	Straight	50	
APH-HDBNCP-SMAP	SMA Plug	HD-BNC Plug	Straight	50	

SMA to MCX

Part Number	Side 1	Side 2	Orientation	Impedance	Features
242129	SMA Jack	MCX Jack	Straight	50	
242127	SMA Jack	MCX Plug	Straight	50	
242234	SMA Jack	MCX Plug	Straight	50	2-Hole Flange
APH-SMAJ-MCXP	SMA Jack	MCX Plug	Straight	50	
242126	SMA Plug	MCX Jack	Straight	50	
242128	SMA Plug	MCX Plug	Straight	50	

COAXIAL ADAPTERS SERIES

SMA to Mini-UHF

Part Number	Side 1	Side 2	Orientation	Impedance	Features
242119	SMA Jack	Mini-UHF Jack	Straight	50	
242117	SMA Jack	Mini-UHF Plug	Straight	50	
242116	SMA Plug	Mini-UHF Jack	Straight	50	

SMA to MMCX

Part Number	Side 1	Side 2	Orientation	Impedance	Features
242143	SMA Jack	MMCX Jack	Straight	50	
242237	SMA Jack	MMCX Jack	Straight	50	Bulkhead
242141	SMA Jack	MMCX Plug	Straight	50	
242193	SMA Jack	MMCX Plug	Straight	50	Bulkhead
242140	SMA Plug	MMCX Jack	Straight	50	
242142	SMA Plug	MMCX Plug	Straight	50	

SMA to N-Type

Part Number	Side 1	Side 2	Orientation	Impedance	Features
242115	SMA Jack	N-Type Jack	Straight	50	
242125	SMA Jack	N-Type Jack	Straight	50	
242125-10	SMA Jack	N-Type Jack	Straight	50	
242163	SMA Jack	N-Type Jack	Straight	50	
901-3143-1000	SMA Jack	N-Type Jack	Straight	50	
901-9720	SMA Jack	N-Type Jack	Straight	50	
APH-SMAJ-NJ	SMA Jack	N-Type Jack	Straight	50	
242113	SMA Jack	N-Type Plug	Straight	50	
901-294	SMA Plug	N-Type Plug	Straight	50	
242112	SMA Plug	N-Type Jack	Straight	50	
242265	SMA Plug	N-Type Jack	Straight	50	
901-293	SMA Plug	N-Type Jack	Straight	50	
APH-SMAP-NJ	SMA Plug	N-Type Jack	Straight	50	
242114	SMA Plug	N-Type Plug	Straight	50	

SMA to QMA

Part Number	Side 1	Side 2	Orientation	Impedance	Features
242262	SMA Jack	QMA Jack	Straight	50	
930-100A-51S	SMA Jack	QMA Jack	Straight	50	Bulkhead
242261	SMA Jack	QMA Plug	Straight	50	Bulkhead, IP68
930-101A-51S	SMA Jack	QMA Plug	Straight	50	4-Hole Flange
242263	SMA Plug	QMA Plug	Straight	50	
242260	SMA Plug	QMA Plug	Straight	50	4-Hole Flange

SMA to RP-SMA

Part Number	Side 1	Side 2	Orientation	Impedance	Features
132169RP	SMA Jack	RP-SMA Jack	Straight	50	
132170RP	SMA Jack	RP-SMA Jack	Straight	50	Bulkhead
132171RP	SMA Plug	RP-SMA Jack	Straight	50	
132172RP	SMA Plug	RP-SMA Jack	Straight	50	
132168RP	SMA Plug	RP-SMA Plug	Straight	50	

COAXIAL ADAPTERS SERIES

SMA to RP-SMB

Part Number	Side 1	Side 2	Orientation	Impedance	Features
242145RP	SMA Jack	RP-SMB Plug	Straight	50	

SMA to RP-TNC

Part Number	Side 1	Side 2	Orientation	Impedance	Features
242107RP	SMA Jack	RP-TNC Jack	Straight	50	
242105RP	SMA Jack	RP-TNC Plug	Straight	50	
242105RP-10	SMA Jack	RP-TNC Plug	Straight	50	
242124RP	SMA Plug	RP-TNC Jack	Straight	50	
242106RP	SMA Plug	RP-TNC Plug	Straight	50	

SMA to SMA

Part Number	Side 1	Side 2	Orientation	Impedance	Features
132169	SMA Jack	SMA Jack	Straight	50	
132169SS	SMA Jack	SMA Jack	Straight	50	Stainless Steel
132170	SMA Jack	SMA Jack	Straight	50	Bulkhead
132170-12SS	SMA Jack	SMA Jack	Straight	50	Bulkhead, IP68, Stainless Steel
132274	SMA Jack	SMA Jack	Right Angle	50	
132340	SMA Jack	SMA Jack	Straight	50	4-Hole Flange
132171	SMA Jack	SMA Plug	Straight	50	
132172	SMA Jack	SMA Plug	Right Angle	50	
901-9216	SMA Jack	SMA Plug	Straight	50	Stainless Steel
901-9219-ASF	SMA Jack	SMA Plug	Right Angle	50	Stainless Steel
132168	SMA Plug	SMA Plug	Straight	50	
901-9218	SMA Plug	SMA Plug	Straight	50	Stainless Steel
132339	SMA Plug	SMA Plug	Right Angle	50	

SMA to SMB

Part Number	Side 1	Side 2	Orientation	Impedance	Features
242147	SMA Jack	SMB Jack	Straight	50	
242182	SMA Jack	SMB Jack	Straight	50	Bulkhead
242145	SMA Jack	SMB Plug	Straight	50	
901-9034	SMA Jack	SMB Plug	Straight	50	
242144	SMA Plug	SMB Jack	Straight	50	
242146	SMA Plug	SMB Plug	Straight	50	

SMA to SMC

Part Number	Side 1	Side 2	Orientation	Impedance	Features
242176	SMA Jack	SMB Jack	Straight	50	
242175	SMA Jack	SMB Plug	Straight	50	Bulkhead
242174	SMA Plug	SMB Jack	Straight	50	
242177	SMA Plug	SMB Plug	Straight	50	

SMA to SMP

Part Number	Side 1	Side 2	Orientation	Impedance	Features
AD-SMAPSMPJ-1	SMA Plug	SMB Jack	Straight	50	

COAXIAL ADAPTERS SERIES

SMA to SSMA

Part Number	Side 1	Side 2	Orientation	Impedance	Features
242189	SMA Plug	SSMA Jack	Straight	50	

SMA to SSMB

Part Number	Side 1	Side 2	Orientation	Impedance	Features
242200	SMA Plug	SSMA Jack	Straight	50	

SMA to N-Type

Part Number	Side 1	Side 2	Orientation	Impedance	Features
242107	SMA Jack	TNC Jack	Straight	50	
242178	SMA Jack	TNC Jack	Straight	50	
242178-10	SMA Jack	TNC Jack	Straight	50	IP68
901-171	SMA Jack	TNC Jack	Straight	50	
901-280	SMA Jack	TNC Jack	Straight	50	
242105	SMA Jack	TNC Plug	Straight	50	
APH-SMAJ-TNCP	SMA Jack	TNC Plug	Straight	50	
242124	SMA Plug	TNC Jack	Straight	50	
APH-SMAP-TNCJ	SMA Plug	TNC Jack	Straight	50	
242106	SMA Plug	TNC Plug	Straight	50	
901-168	SMA Plug	TNC Plug	Straight	50	

SMA to UHF

Part Number	Side 1	Side 2	Orientation	Impedance	Features
242111	SMA Jack	UHF Jack	Straight	50	
242109	SMA Jack	UHF Plug	Straight	50	
242108	SMA Plug	UHF Plug	Straight	50	
242110	SMA Plug	UHF Jack	Straight	50	

VIEW ALL SMA ADAPTERS

SMB ADAPTERS

The SMB product series features a snap-on coupling mechanism and is available in 50 and 75 ohm configurations. These interconnects offer broadband performance with low reflection from DC to 4 GHz and utilize die cast components on non-critical areas to provide a low cost solution.

Part Number	Side 1	Side 2	Orientation	Impedance	Features
242186	SMA Jack	BNC Jack	Straight	50	
242184	SMB Jack	BNC Plug	Straight	50	
242224	SMB Jack	F-Type Jack	Straight	50	Bulkhead
242198	SMB Jack	N-Type Jack	Straight	50	4-Hole Flange
242183	SMB Jack	N-Type Jack	Straight	50	Bulkhead
242182	SMB Jack	SMA Jack	Straight	50	Bulkhead
242147	SMB Jack	SMA Jack	Straight	50	
242144	SMB Jack	SMA Plug	Straight	50	
142250	SMB Jack	SMA Jack	Straight	50	Bulkhead
142244	SMB Jack	SMA Jack	Straight	50	
142310	SMB Jack	SMB Plug	Straight	50	
142248	SMB Jack	SMB Plug	Right Angle	50	
242185	SMB Plug	BNC Jack	Straight	50	

COAXIAL ADAPTERS SERIES

Part Number	Side 1	Side 2	Orientation	Impedance	Features
242187	SMB Plug	BNC Plug	Straight	50	
242223	SMB Plug	F-Type Jack	Straight	50	Bulkhead
242145	SMB Plug	SMA Jack	Straight	50	
901-9034	SMB Plug	SMA Jack	Straight	50	
242146	SMB Plug	SMB Plug	Straight	50	
142246	SMB Plug	SMB Plug	Straight	50	
142245	SMB Plug	SMB Plug	Straight	50	
242202	SMB Plug	SMC Jack	Straight	50	
242228	SMB Plug	SMB Plug	Straight	50	

VIEW ALL SMB ADAPTERS

SMC ADAPTERS

The SMC interface features a threaded coupling mechanism and it available in 50 and 75 ohm configurations. These interconnects offer broadband performance with low reflection from DC to 10 GHz. They are ideal for telecommunications and instrumentation applications.

Part Number	Side 1	Side 2	Orientation	Impedance	Features
242176	SMC Jack	SMA Jack	Straight	50	
242174	SMC Jack	SMA Plug	Straight	50	
242202	SMC Jack	SMB Plug	Straight	50	
152145	SMC Jack	SMC Jack	Straight	50	Bulkhead
242175	SMC Plug	SMA Jack	Straight	50	
242177	SMC Plug	SMA Plug	Straight	50	
242228	SMC Plug	SMB Plug	Straight	50	

VIEW ALL SMC ADAPTERS

SMP ADAPTERS

The SMP product series features a subminiature interface in the same scale as the MMCX but with a frequency range of DC to 40 GHz. These interconnects are available in multiple configurations with both push-on and snap-on mating styles. The product family can be utilized as a highly shielded interconnect for high data rate applications for in a board-to-board system using a floating bullet which compensates for radial and axial misalignment.

Part Number	Side 1	Side 2	Orientation	Impedance	Features
AD-SMAPSMPJ-1	SMP Jack	SMA Plug	Straight	50	
SMP-FSBA-990	SMP Plug	SMP Plug	Straight	50	
SMP-FSBA-739	SMP Plug	SMP Plug	Straight	50	
SMP-FSBA-696	SMP Plug	SMP Plug	Straight	50	
SMP-FSBA-645	SMP Plug	SMP Plug	Straight	50	
SMP-FSBA-594	SMP Plug	SMP Plug	Straight	50	
SMP-FSBA-254	SMP Plug	SMP Plug	Straight	50	
SMP-FSBA-224	SMP Plug	SMP Plug	Straight	50	
SMP-FSBA-145	SMP Plug	SMP Plug	Straight	50	
SMP-FSBA-093	SMP Plug	SMP Plug	Straight	50	
SMP-FSBA-090	SMP Plug	SMP Plug	Straight	50	

VIEW ALL SMP ADAPTERS

COAXIAL ADAPTERS SERIES

SMPM ADAPTERS

The SMPM product series features a micro-miniature interface with excellent electrical performance up to 65 GHz. SMPM interconnects are commonly used in miniaturized high frequency coaxial modules and are available in a variety of configurations and termination styles.

Part Number	Side 1	Side 2	Orientation	Impedance	Features
925-165A-51S	SMPM Plug	SMPM Plug	Straight	50	
925-142A-51S	SMPM Plug	SMPM Plug	Straight	50	
925-141A-51S	SMPM Plug	SMPM Plug	Straight	50	Bulkhead
925-106A-51S	SMPM Plug	SMPM Plug	Straight	50	4-Hole Flange
925-166A-51S	SMPM Plug	SMPM Plug	Straight	50	Bulkhead
925-167A-51S	SMPM Plug	SMPM Plug	Straight	50	Bulkhead

VIEW ALL SMPM ADAPTERS

SSMA ADAPTERS

The SSMA product series is designed with a threaded coupling mechanism and is essentially a scaled down version of the SMA. SSMA interconnects are characterized by their compactness, high frequency bandwidth and reliable mechanical performance.

Part Number	Side 1	Side 2	Orientation	Impedance	Features
242189	SSMA Jack	SMA Plug	Straight	50	

VIEW ALL SSMA ADAPTERS

SSMB ADAPTERS

The SSMB product series is a smaller version of the standard SMB connector. This interface provides excellent electrical performance with a micro-miniature footprint. The compact design makes it ideal for applications with space constraints.

Part Number	Side 1	Side 2	Orientation	Impedance	Features
242200	SSMB Jack	SMA Plug	Straight	50	
242200-10	SSMB Jack	SMA Plug	Straight	50	

VIEW ALL SSMB ADAPTERS

TNC ADAPTERS

The TNC product series features a micro-miniature, threaded and waterproof design. The durable construction makes them ideal for vibration intense applications.

Part Number	Side 1	Side 2	Orientation	Impedance	Features
122348	TNC Jack	TNC Jack	Straight	50	
122346	TNC Jack	TNC Jack	Straight	50	Isolated, Bulkhead
122347	TNC Jack	TNC Jack	Straight	75	Isolated, Bulkhead
122430	TNC Jack	TNC Jack	Straight	50	Bulkhead
031-6200	TNC Jack	TNC Jack	Straight	75	Bulkhead
122491	TNC Jack	TNC Jack	Straight	50	4-Hole Flange
122348RP	TNC Jack	TNC RP-Jack	Straight	50	
122498RP	TNC Jack	TNC RP-Plug	Straight	50	
122352	TNC Plug	TNC Jack	Right Angle	50	
122350	TNC Plug	TNC Plug	Straight	50	
122498	TNC Plug	TNC Jack	Straight	50	
122498-75	TNC Plug	TNC Jack	Straight	75	
122350RP	TNC Plug	TNC RP-Plug	Straight	50	

VIEW ALL TNC ADAPTERS

COAXIAL ADAPTERS SERIES

TRIAX ADAPTERS

Triax interconnects are ideal for applications where maximum RF shielding and minimum noise radiation is required. They are designed for harsh environments with high temperature, and can be tested and approved for use in nuclear reactor chambers.

Part Number	Side 1	Side 2	Orientation	Impedance	Features
031-8356-2	Triax Jack	Triax Jack	Straight	Non-Constant	Bulkhead
000-53225	Triax Jack	Triax Jack	Straight	Non-Constant	Bulkhead

VIEW ALL TRIAX ADAPTERS

TWINAX ADAPTERS

Twinax interconnects are designed with improved shielding characteristics and are primarily used in balanced low level and high sensitivity circuits. These products feature a keyway polarization to ensure system integrity and prevent signals from being mixed, making them ideal for computer network applications.

Part Number	Side 1	Side 2	Orientation	Impedance	Features
082-5588-RFX	Twinax Jack	Twinax Jack	Straight	Non-Constant	
000-7925-RFX	Twinax Jack	Twinax Jack	Straight	Non-Constant	Bulkhead

VIEW ALL TWINAX ADAPTERS

UHF ADAPTERS

The UHF product series features general purpose units developed for use in low frequency systems. UHF interconnects are designed with a threaded coupling mechanism and solderable screw-on termination feature which requires no specialized crimping tools.

Part Number	Side 1	Side 2	Orientation	Impedance	Features
242165	UHF Jack	BNC Jack	Straight	Non-Constant	
242134	UHF Jack	BNC Plug	Straight	Non-Constant	Bulkhead
000-2900 (UG-255/U)	UHF Jack	BNC Plug	Straight	50	
242153	UHF Jack	Mini-UHF Plug	Straight	50	
242155	UHF Jack	N-Type Plug	Straight	50	
000-34125 (UG-83B/U)	UHF Jack	N-Type Plug	Straight	50	
000-4400 (UG-146/U)	UHF Jack	N-Type Plug	Straight	50	
242111	UHF Jack	SMA Jack	Straight	50	
242108	UHF Jack	SMA Plug	Straight	50	
182319	UHF Jack	UHF Jack	Straight	50	Bulkhead
182109	UHF Jack	UHF Jack	Straight	50	
083-1J-RFX	UHF Jack	UHF Jack	Straight	Non-Constant	
083-1J	UHF Jack	UHF Jack	Straight	Non-Constant	
083-1F (UG-363/U)	UHF Jack	UHF Jack	Straight	Non-Constant	
182134	UHF Jack	UHF Plug	Right Angle	50	
083-1AP	UHF Jack	UHF Plug	Right Angle	Non-Constant	
242164	UHF Plug	BNC Jack	Straight	50	
031-28-RFX	UHF Plug	BNC Jack	Straight	50	
031-28 (UG-273/U)	UHF Plug	BNC Jack	Straight	50	
192110	UHF Plug	FME Plug	Straight	50	
000-14000 (UG-83/U)	UHF Plug	N-Type Jack	Straight	Non-Constant	
242109	UHF Plug	SMA Jack	Straight	50	
242110	UHF Plug	SMA Plug	Straight	50	
242241	UHF Plug	TNC Jack	Straight	50	
083-877	UHF Plug	UHF Plug	Straight	Non-Constant	

VIEW ALL UHF ADAPTERS

COAXIAL ADAPTERS SERIES

TEE-ADAPTERS

Tee Adapters allow for three RF interfaces to be connected together.

Part Number	Tee-adapter Type	Tee-adapter Gender	Impedance	Features
000-17450	BNC	Jack-Jack-Jack	50	
112455	BNC	Jack-Jack-Jack	50	
112456	BNC	Jack-Jack-Jack	75	
000-21900	BNC	Jack-Jack-Plug	50	
112590	BNC	Jack-Jack-Plug	50	
031-208 (UG-274A/U)	BNC	Jack-Jack-Jack	50	
031-208-1051	BNC	Jack-Jack-Jack	50	
031-208-RFX	BNC	Jack-Jack-Jack	50	
031-2208 (UG-274B/U)	BNC	Jack-Jack-Jack	50	
031-4564	BNC	Jack-Jack-Jack	50	
031-70036	BNC	Jack-Jack-Jack	75	
031-8 (UG-274/U)	BNC	Jack-Jack-Jack	50	
112459	BNC	Jack-Jack-Jack	50	
112461	BNC	Jack-Jack-Jack	50	
112462	BNC	Jack-Jack-Jack	75	
112567	BNC	Plug-Jack-Jack	50	
112771	BNC	Plug-Jack-Jack	50	
000-27750	BNC	Plug-Jack-Plug	50	
034-1023	HD-BNC	Jack-Jack-Jack	75	
082-102-RFX	N Type	Jack-Jack-Jack	50	
082-99 (UG-28A/U)	N Type	Jack-Jack-Jack	50	
172127	N Type	Jack-Jack-Jack	50	
172127S	N Type	Jack-Jack-Jack	50	
172233	N Type	Jack-Jack-Jack	50	
082-102 (UG-107B/U)	N Type	Jack-Plug-Jack	50	
172125	N Type	Jack-Plug-Jack	50	
901-178	SMA	Jack-Jack-Jack	50	
132216	SMA	Jack-Jack-Jack	50	
132216SS	SMA	Jack-Jack-Jack	50	
901-382-1	SMA	Jack-Jack-Plug	50	
901-305	SMA	Jack-Plug-Jack	50	
132217	SMA	Jack-Plug-Jack	50	
132399	SMA	Plug-Plug-Plug	50	
142299	SMB	Jack-Jack-Jack	50	
142300	SMB	Jack-Plug-Jack	50	
122355	TNC	Jack-Jack-Jack	75	
122354	TNC	Jack-Jack-Jack	50	
000-79700	TNC	Jack-Plug-Jack	50	
122356	TNC	Jack-Plug-Jack	50	
122357	TNC	Jack-Plug-Jack	50	
031-41050-4	Triax	Jack-Plug-Jack	Non-Constant	
082-5677-RFX	Twinax	Jack-Jack-Jack	Non-Constant	
162106	Twinax	Jack-Jack-Jack	50	
000-26850-RFX	Twinax	Jack-Plug-Jack	Non-Constant	
083-1T	UHF	Jack-Plug-Jack	Non-Constant	

VIEW ALL TEE-ADAPTERS

Amphenol® RF

www.amphenolrf.com

North America

Amphenol RF Global HQ
4 Old Newtown Road
Danbury, CT 06810
Toll Free: (800) 627-7100
International: (203) 743-9272
Email: sales@amphenolrf.com

Western US Sales Office
5069 Maureen Lane, Suite B
Moorpark, CA 93021

Mexico
Circunvalacion del Mar 56
Parque Industrial de
Nogales
Nogales, Sonora, C.P.
84094

Asia

China
Block DM2
Tang Wei Industrial District
Gong Ming Street
Guang Ming New District
Shenzhen City, Guangdong
Provice, P.R. China

China
No. 55, Industry 2nd Road
Aerospace Economic Technology
Development Zone
Xi'an, Shaanxi Province
P.R. China

India
Plot 3/4B & 5A
CMDA's Industrial Area
Maraimalai Nagar
Kilkaranai Village
Chengleput Taluk, Kancheepuram
Chennai, 603209

Europe

Amphenol RF Europe
Hoofdveste 19
3992 DH Houten
The Netherlands
Tel: +31 30 635 8000
Tel: +31 30 637 7899
Email: info@amphenol-nl.com

Q-FLEX
www.q-flex.fi info@q-flex.fi
+358 2 4894 500