INDUSTRIAL@AMPHENOL
TRUSTED GLOBALLY

Amphenol
Amphenol PCD Shenzhen

HVSP

High Voltage Small Plastic

AMPHENOL PCD SHENZHEN

Q-FLEX
www.q-flex.fi info@q-flex.fi
+358 2 4894 500

www.amphenolpcd.com.cn

CONTENT

PRODUCT INTRODUCTION..... 2

HVSP PROFILE..... 3
R6 RECEPTACLE & PLUG..... 4
R8 RECEPTACLE & PLUG..... 5
R10 RECEPTACLE & PLUG..... 6
HOW TO ORDER..... 7
PART NUMBER REFERENCE..... 8
CODING / ALTERNATE POSITION..... 9

HVSPN PROFILE..... 10
R6 RECEPTACLE & PLUG..... 11
TEMPERATURE RISE CURVE..... 12

PRODUCT INTRODUCTION

HVSP series is High Voltage Small size Plastic connector, it has rotation and polarization integration, can be used in Energy Storge and other applications. It's a prime solution for limited space and cost.

Polarization / Alternate positions

To avoid cross plugging problems in applications, we designed 2 types:

HVSPN - Alternate keyway no rotation

HVSP - Alternate keyway with rotation and polarization integration

Product Series	HVSPN R6	HVSP R6	HVSP R8	HVSP R10
Rated Current	100A	120A	150A to 180A	180A to 250A
Rated Voltage	1000V DC	1000V DC	1000V DC	1000V DC
IP Rating	IP67/IP6K9K	IP67/IP6K9K	IP67/IP6K9K	IP67/IP6K9K
Touch-Proof	Yes	Yes	Yes	No
Cable Type	25mm^2	25mm^2	35 to 50mm^2	50 to 70mm^2
Shielding	No	No	No	No

HVSP PROFILE

HVSP KEY FEATURES

Small in size with plastic housing

Broad wire range

Right angle plug

360° rotation & polarization intergation

Multiple alternate positions

No tool required to unmate

Safe, sealed with touch proof

RoHS compliant

APPLICATIONS	
Battery	
Motor	
Inverter	
MECHANICAL	
Durability	⩾ 50 mating cycles
Wire range	25mm^2 to 70mm^2
Insertion and extraction force	< 100N
CPA	Aavailable
ELECTRICAL	
Rated voltage	1000V DC
Max rated current	up to 250A
Insulator resistance	> 2000MΩ
Dielectric withstand voltage	3000V AC
Shielding type	no shielding
ENVIRONMENTAL	
Sealing	IP67(mated), IP6K9K
Temperature range	-40°C to 125°C

RECEPTACLE R6

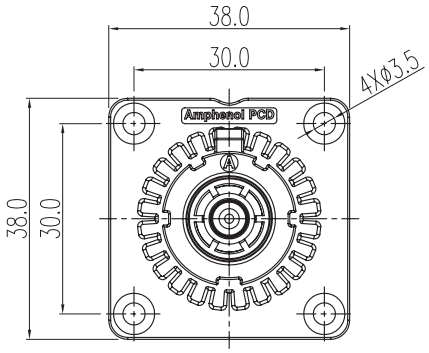

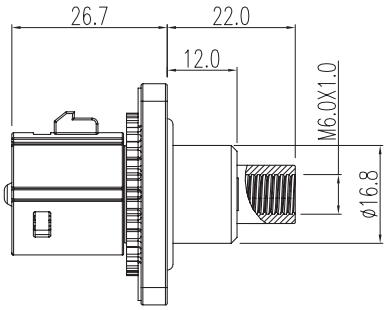

Screw termination- Internal
MD Type

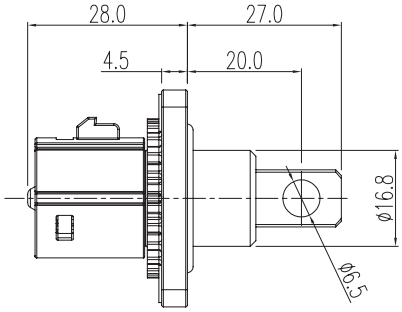

Through hole termination
MH Type

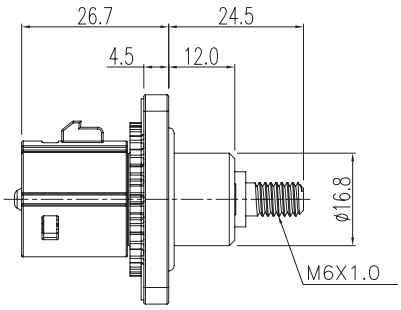

Screw termination - External
MT Type

PLUG R6

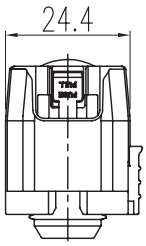

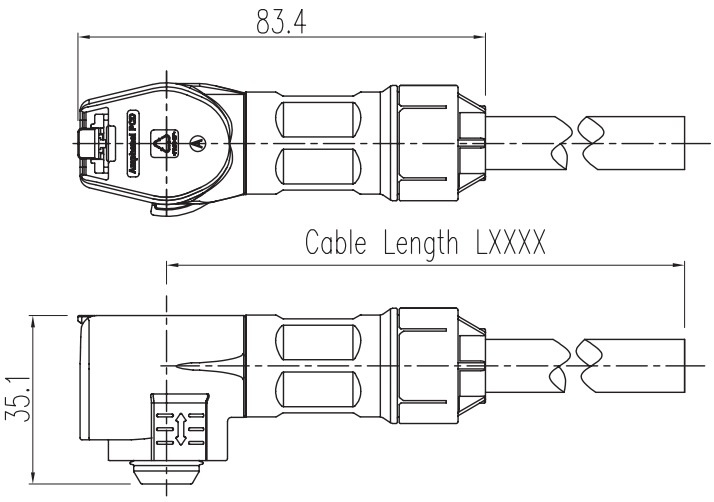

RECEPTACLE R8

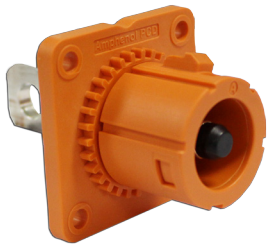

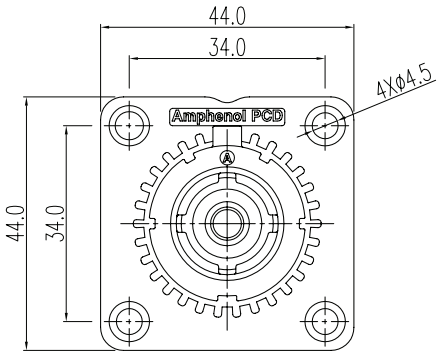

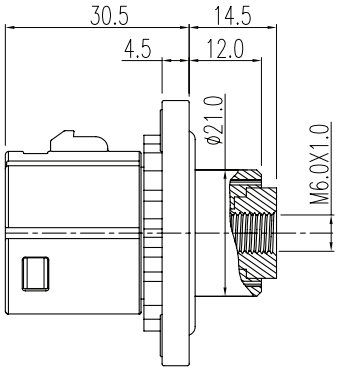

Screw termination- Internal
MD Type

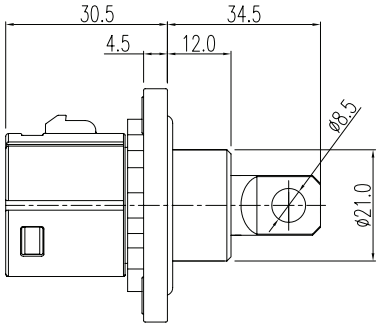

Through hole termination
MH Type

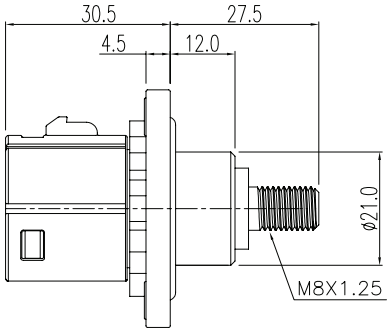

Screw termination - External
MT Type

PLUG R8

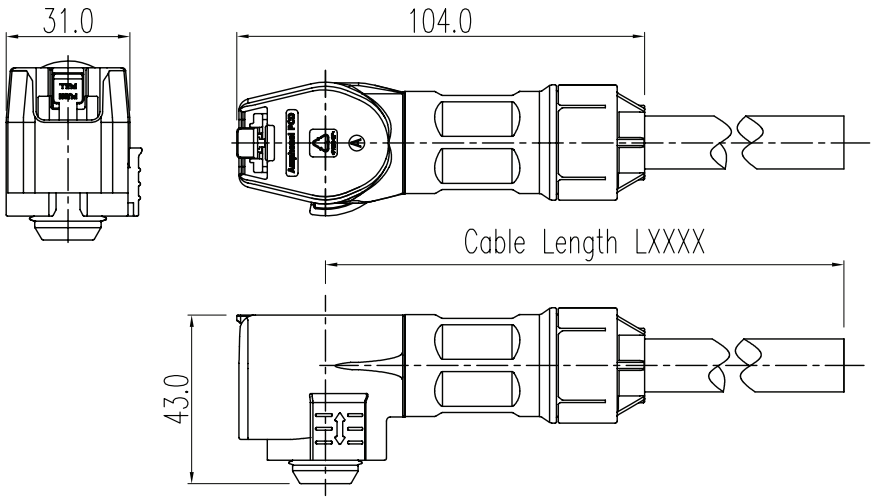

RECEPTACLE R10

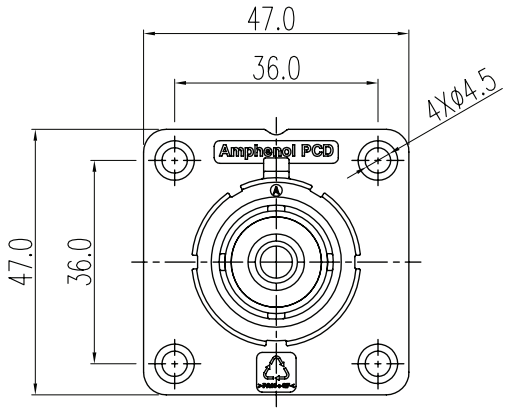

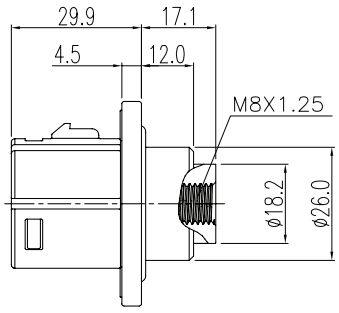

Screw termination - Internal
MD Type

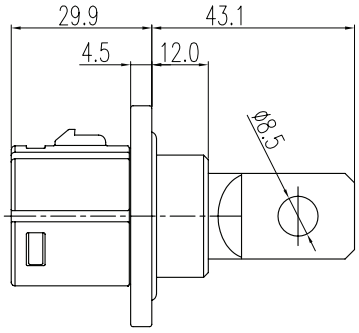

Through hole termination
MH Type

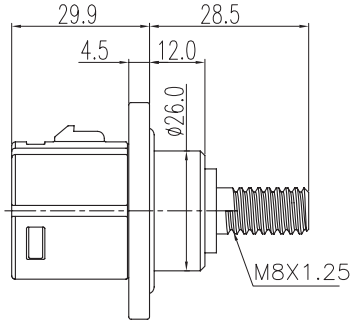

Screw termination - External
MT Type

PLUG R10

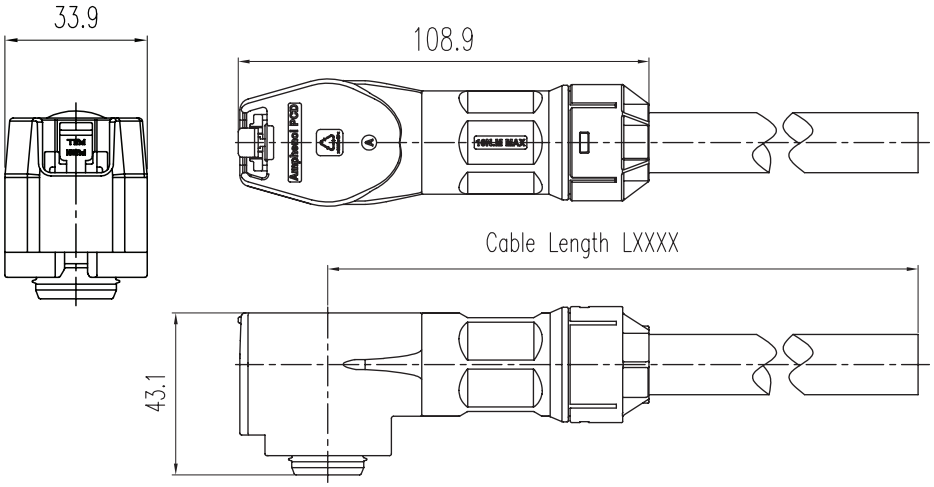

HOW TO ORDER **RECEPTACLE**

HVSP	0	R8	MT	A	/

Shell type:
0: Box mounting receptacle

Insert size:
R6: 6mm pin contact
R8: 8mm pin contact
R10: 10mm pin contact

Termination:
MT: Screw tail
MH: Through hole contact
MD: Screw tail inside

Coding / Alternate position:
A: Alternate position A, please refer to page 6
B: Alternate position B, please refer to page 6
C: Alternate position C, please refer to page 6
D: Alternate position D, please refer to page 6
E: Alternate position E, please refer to page 6

Color of housing:
/: Omit, orange
B: Black

HOW TO ORDER **PLUG**

HVSP	9	R8	FC	X	/	35	LXXXX

Shell type:
9: Right angle plug

Insert size:
R6: 6mm socket contact
R8: 8mm socket contact
R10: 10mm socket contact

Termination:
FC: Crimp

Coding / Alternate position:
A: Alternate position A, please refer to page 6
B: Alternate position B, please refer to page 6
C: Alternate position C, please refer to page 6
D: Alternate position D, please refer to page 6
E: Alternate position E, please refer to page 6

Color of housing:
/: Omit, orange
B: Black

Cable diameter:
25: 25mm^2 cable (OD: 9.5mm to 11mm)
35: 35mm^2 cable (OD: 11mm to 12.5mm)
50: 50mm^2 cable (OD: 13mm to 14.5mm)
70: 70mm^2 cable (OD: 15mm to 16.5mm)

Cable length :
LXXXX: (Unit in mm)

PART NUMBER REFERENCE	
Recetpacle	Plug
HVSP R6 PART NUMBER (TBD)	
HVSP-0R6-M D/H/T A	HVSP-9R6-FCA-XXLXXXX
HVSP-0R6-M D/H/T B	HVSP-9R6-FCB-XXLXXXX
HVSP-0R6-M D/H/T C	HVSP-9R6-FCC-XXLXXXX
HVSP-0R6-M D/H/T D	HVSP-9R6-FCD-XXLXXXX
HVSP-0R6-M D/H/T E	HVSP-9R6-FCE-XXLXXXX
HVSP R8 PART NUMBER	
HVSP-0R8-M D/H/T A	HVSP-9R8-FCA-XXLXXXX
HVSP-0R8-M D/H/T B	HVSP-9R8-FCB-XXLXXXX
HVSP-0R8-M D/H/T C	HVSP-9R8-FCC-XXLXXXX
HVSP-0R8-M D/H/T D	HVSP-9R6-FCD-XXLXXXX
HVSP-0R8-M D/H/T E	HVSP-9R6-FCE-XXLXXXX
HVSP R10 PART NUMBER	
HVSP-0R10-M D/H/T A	HVSP-9R10-FCA-XXLXXXX
HVSP-0R10-M D/H/T B	HVSP-9R10-FCB-XXLXXXX
HVSP-0R10-M D/H/T C	HVSP-9R10-FCC-XXLXXXX
HVSP-0R10-M D/H/T D	HVSP-9R10-FCD-XXLXXXX
HVSP-0R10-M D/H/T E	HVSP-9R10-FCE-XXLXXXX

CODING / ALTERNATE POSITION

Coding A

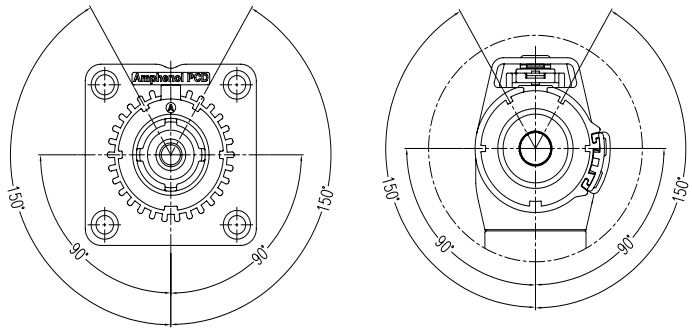

Coding B

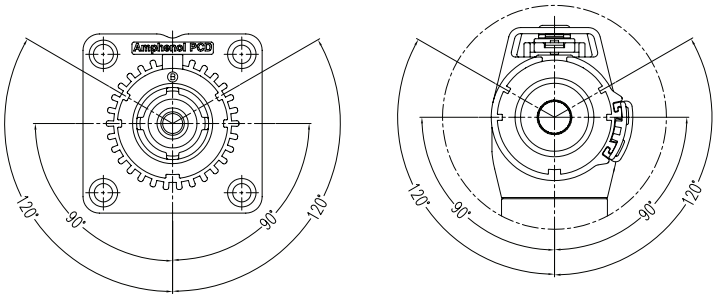

Coding C

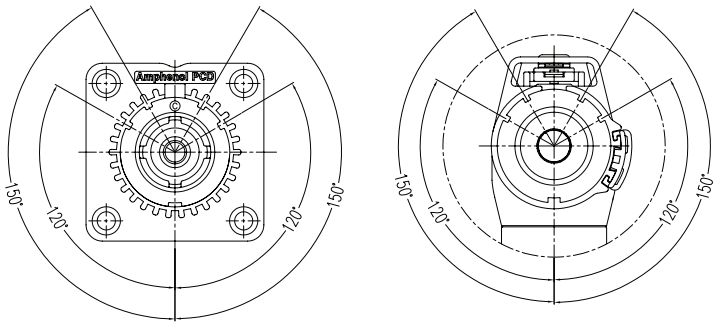

Coding D

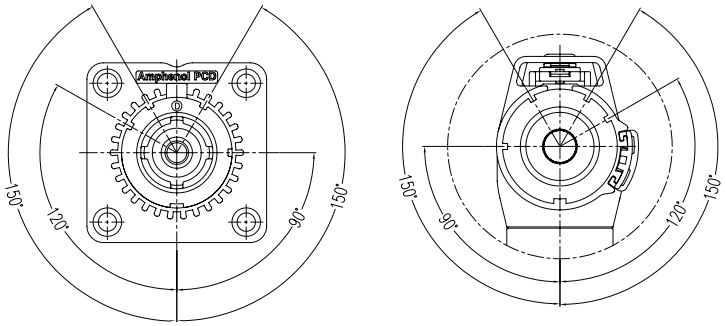

Coding E

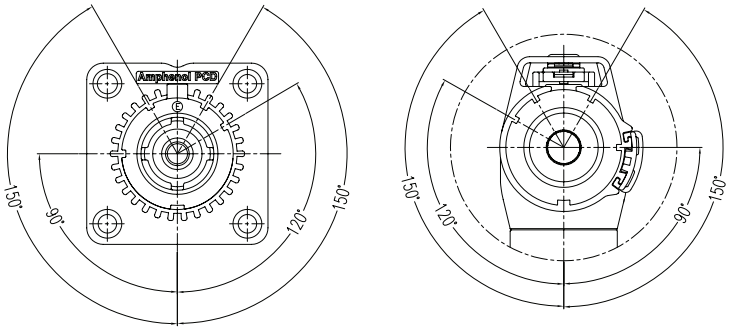

HVSPN R6 PROFILE

APPLICATIONS	
Battery	
Motor	
Inverter	
MECHANICAL	
Durability	⩾ 50 mating cycles
Wire range	25mm^2
Insertion and extraction force	< 100N
CPA	Aavailable
ELECTRICAL	
Rated voltage	1000V DC
Max rated current	100A
Insulator resistance	> 2000MΩ
Dielectric withstand voltage	3000V AC
Shielding type	no shielding
ENVIRONMENTAL	
Sealing	IP67(mated), IP6K9K
Temperature range	-40°C to 125°C

RECEPTACLE

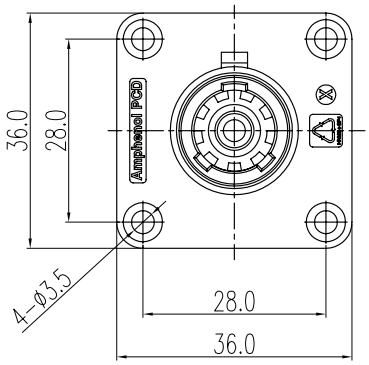

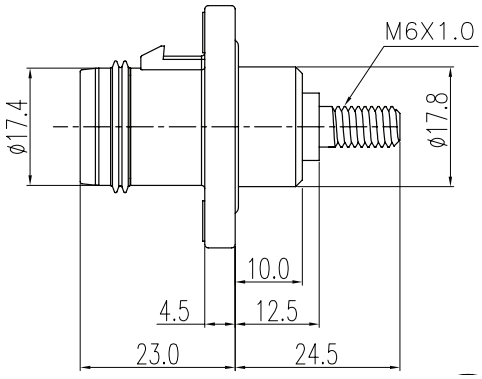

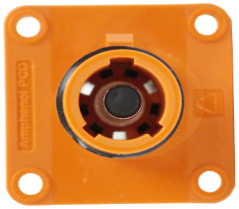

Receptacle	Part Number	Alternate Position
REP 1	HVSPN0 R6 MT**X**	135°
REP 2	HVSPN0 R6 MT**Y**	120°

PLUG

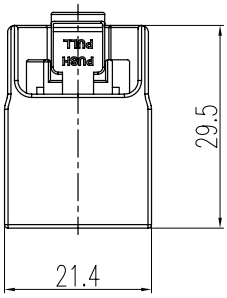

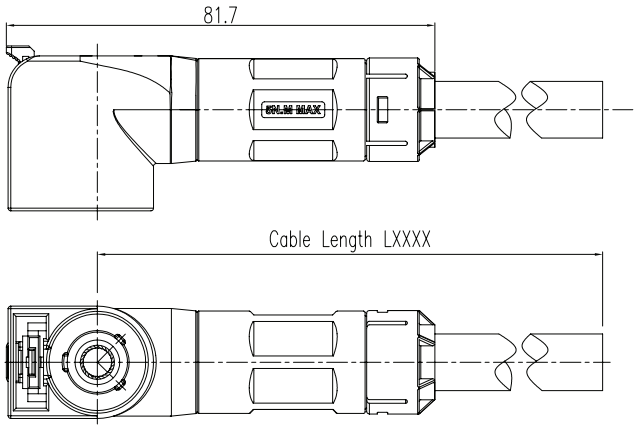

Plug	Part number	Alternate position
PLUG 1	HVSPN9 R6 FC**X** 25LXXXX	135°
PLUG 2	HVSPN9 R6 FC**Y** 25LXXXX	120°

Notes:
25 means: cable diameter **25mm²** unshielded single core
XXXX means: cable length, depends on customers request
(Unit in mm)

TEMPERATURE RISE CURVE

HVSP R6

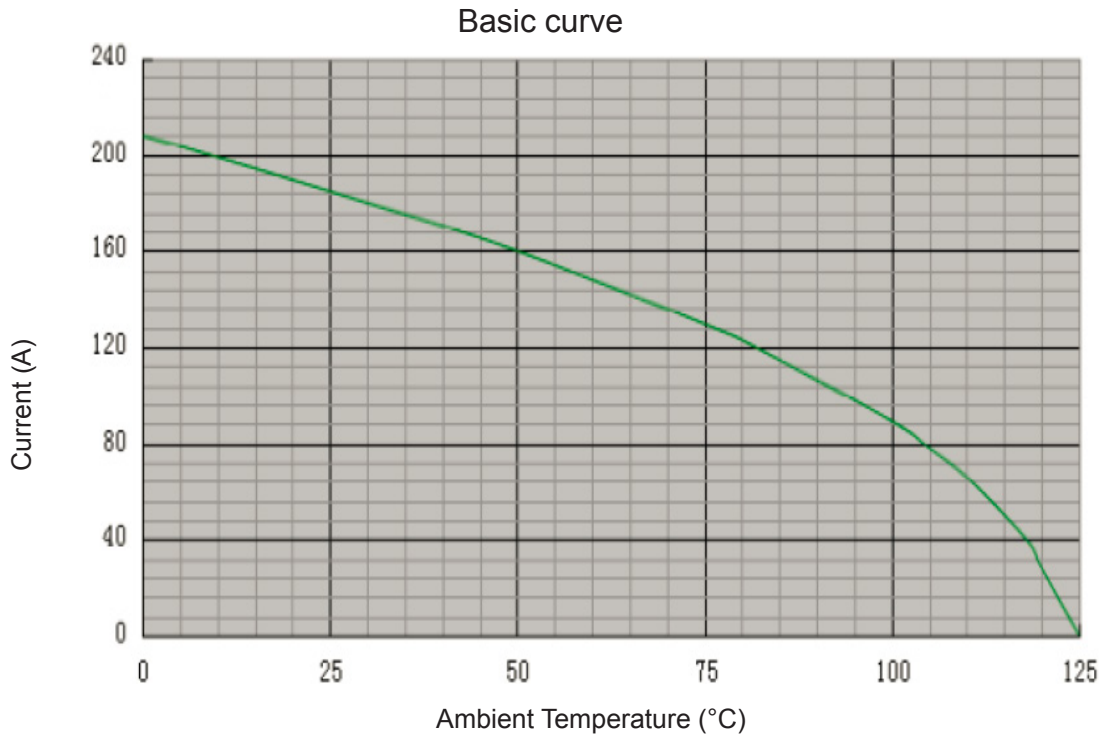

HVSP R8

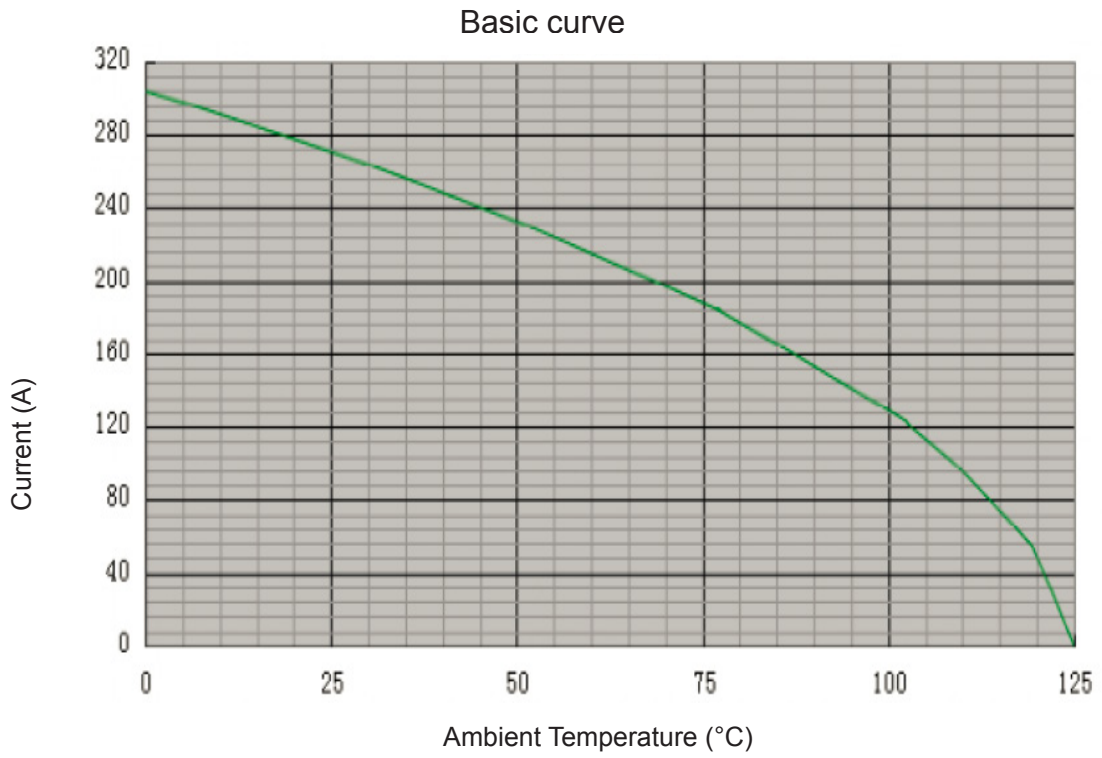

TEMPERATURE RISE CURVE

HVSP R10

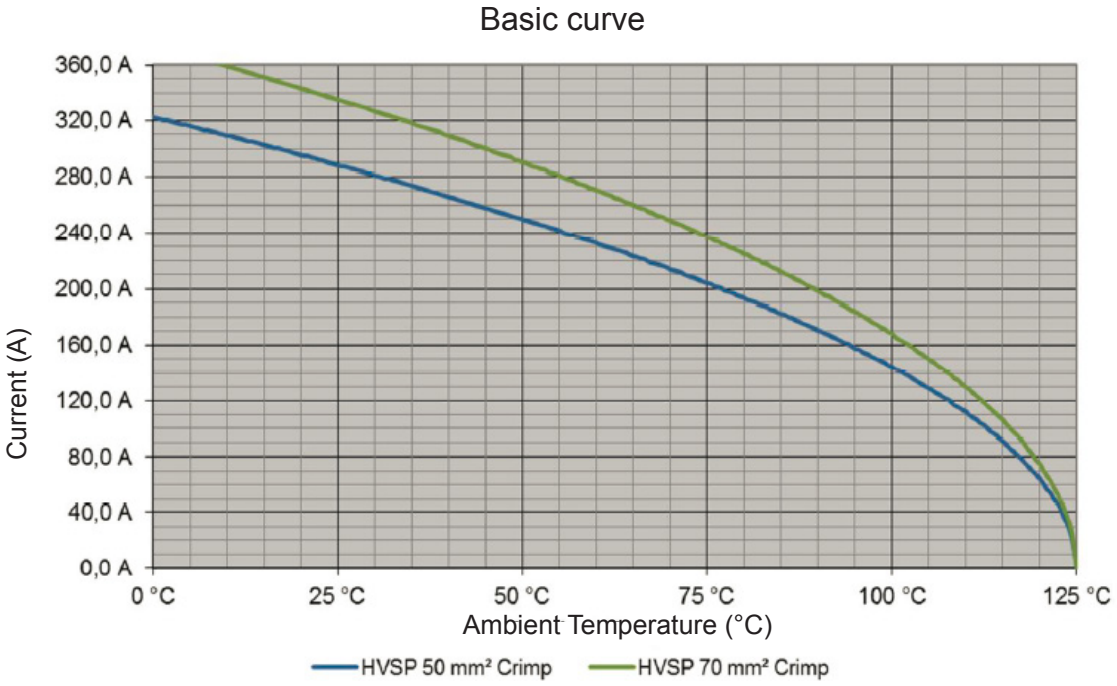

Amphenol PCD Shenzhen

Building 21
1st Liao Keng Industrial Zone
Shi Yan Street, Bao An District Shenzhen 518108
China

Tel.: +86 755-8173-8000
Fax: +86 755-8173-8180

www.amphenolpcd.com.cn

Q-FLEX

www.q-flex.fi info@q-flex.fi
+358 2 4894 500

Notes:

Amphenol PCD Shenzhen has made every effort to ensure that the information contained in this catalog is accurate at the time of publication. Specifications or information stated in this publication are subject to change without notice.

Amphenol PCD Shenzhen reserves the right to clarify this catalog.