CAPACITORS FOR POWER ELECTRONICS

Q-FLEX

Avantintie 7, FI-21420 Lieto
+358 2 4894 500
info@q-flex.fi | q-flex.fi

CDE CORNELL DUBILIER

ENERGIZING IDEAS

INVERTERS

TABLE OF CONTENTS

SERIES	DESCRIPTION
380-382	380L/LX: +85°C, 3,000 Hrs., High Capacitance, 85°C
381LL	381-383LL: +105°C, 5,000 Hrs., Long Life
381-383	381L/LX: +105°C, 3,000 Hrs., High Ripple Current
381LR	381LR: +105°C, 3,000 Hrs., Ultra-High Ripple
LMB	LMB: +105°C, 3000 Hrs., Bulk Filtering/Smoothing
LMH	LMH: +105°C, 2000 Hrs., Bulk Filtering/Smoothing
LMX	LMX: +105°C, 5000 Hrs., Bulk Filtering/Smoothing
500C	500C: +95°C, 5,000 Hrs., Long Life
500R	500R +85°C, 5,000 Hrs., High Ripple, Long Life, Inverter Grade
520C	520C: + 85°C, 8,000 Hrs., Long Life, Inverter Grade
550	550: +105°C, 2,000 Hrs., High Ripple, Long Life, Inverter Grade
550C	550C: +105°C, 10,000 Hrs., Ultra Ripple, Long Life, Inverter Grade
DCMC	DCMC: +85°C, 2,000 Hrs., High Capacitance
ALH	1-Phase
PC	PC: +70°C, Single Phase AC Power Harmonic Filter
PCD	1-Phase
MMPO	MMPO: 1-Phase & 3-Phase
EPFC	EPFC: 3-Phase
PFCH	PFCH: 3-Phase AC Power Harmonic Filter
PFCS	PFCS: 3-Phase AC Power Factor Correction
BLH	BLH: THB 85 °C / 85 % RH, 1500h at rated voltage
DCB	DCB: +85°C, 2 or 4 Lead Box
944L	944L: +85°C, Metallized, Low ESR, High Current, High Frequency for Inverter/Converter Applications
944U	944U: +85°C, High Current, Low Profile for Inverter Applications
947C	947C: +85°C. High Current, High Capacitance for Inverter Applications
947D	947D: DC Link/Cylindrical/Bus Mount
UNL	UNL: DC Link/Board Mount/Cylindrical
940	940: +105°C, Metallized, Snubber, High dV/dt
941	941: +105°C, Metallized, Flattened, Snubber, High dV/dt
942	942: +105°C, Metallized/Foil, Very High dV/dt, Snubber
943	943: +105°C, Metallized, Flattened, Very High dV/dt, Snubber
PMB_RMB	PMB_RMB: +100°C, Metallized Polypropylene, IGBT Direct Mount Snubber Lug Terminals
PMC	PMC: +100°C, Metallized Polypropylene, IGBT Direct Mount Snubber Lug Terminals
SCC	SCC: +70°C, for Dual IGBT Modules, Integrated Diodes
SCD	SCD: +85°C, High dV/dt, Direct Mount Snubber
SCM	SCM: +70°C, P or N RCD Clamp
PHB	PHB: +100°C, Metallized Polypropylene, High Frequency Radial Lead Box
MKP	MKP: +110°C, Class X2
MPX	MPX/MPXB: +85°C, 85/85 THB X2 Capacitor

This is the table of contents for a custom generated catalog and may not contain all of the products available. Please refer to our website for our full parametric search of products.

Type 380LX / 382LX 85 °C High Capacitance, Snap-In Aluminum

2, 4 and 5 pin styles available

The excellent value of Type 380L/LX capacitors finds application in switching power supply input and output circuits and even motor drives where the high surface area of multiple units in parallel approaches the ripple capability of our Type 520C computer-grade capacitor. Type 380LX delivers more capacitance per can size while Type 380L available in the largest case sizes gives lower ESR for the same capacitance. Types 382L and 382LX give the choice of 4 or 5 leads for stable, reverse proof mounting.

Highlights

- Latest available ratings, worldwide
- Top performance in power supplies and motor drives
- Big selection of 49 case sizes
- 2, 4 and 5 leads available

Specifications

Temperature Range	–40 °C to +85 °C ≤ 250 Vdc –25 °C to +85 °C ≥ 315 Vdc
Rated Voltage Range	16 Vdc to 500 Vdc
Capacitance Range	33 µF to 270,000 µF
Capacitance Tolerance	± 20%
Leakage Current	$\leq 3\sqrt{CV}$ µA at 5 min
Ripple Current Multipliers	Ambient Temperature

45 °C	60 °C	70 °C	85 °C
1.5	1.4	1.3	1.0

Frequency

	50 Hz	60 Hz	120 Hz	500 kHz	1 kHz	10 kHz & Up
16 - 100 WV	0.93	0.95	1.00	1.05	1.08	1.15
160 - 450 WV	0.75	0.80	1.00	1.20	1.25	1.40

Low Temperature Characteristics	Impedance ratio: $Z_{-20°C}/Z_{+25°C}$ ≤ 8 (16–50 Vdc) ≤ 4 (63–100 Vdc) ≤ 3 (150–500 Vdc)
Endurance Life Test	3,000 h @ full load at +85 °C Δ Capacitance ±20% ESR 200% of limit DCL 100% of limit
Shelf Life Test	1,000 h @ 85 °C Δ Capacitance ±20% ESR 200% of limit DCL 100% of limit
Vibration	10 to 55 Hz, 0.06" and 10 g max, 2 h in each plane
RoHS Compliant	

Type 380LX / 382LX 85 °C High Capacitance, Snap-In Aluminum

2, 4 and 5 pin styles available

Part Numbering System

382LX	272	M	200	N05	2	V
Type	Cap	Tolerance	Voltage	Case Code	Insulation	# of pins
380L / LX (2 pins)	**272** = 2700 µF	**M =** ±20%	**200** = 200 Vdc		**2** = PVC	**Blank** = 2 pins / 4 pins snap-in 6.3mm L
382L / LX (4 or 5 pins)	**333** = 33000 µF					**A** = 2 pins snap-in 4.0mm L
						VS = 5 pins snap-in 6.3mm L
						V = 5 pins standoff

Outline Drawings Dimensions shown are in mm

Two Pins
380L/LX (22 through 40 mm diameter)

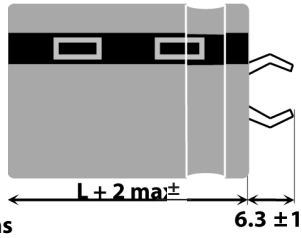

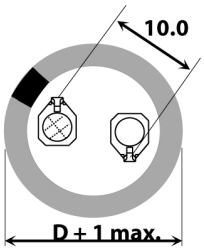

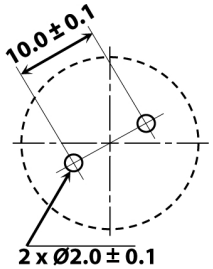

PC Board Mounting Holes

Available in 2, 4 and 5 pins

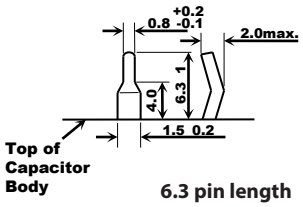

6.3 pin length

Four Pins
382L/LX (35, 40 and 45mm diameter)

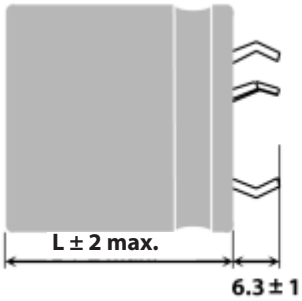

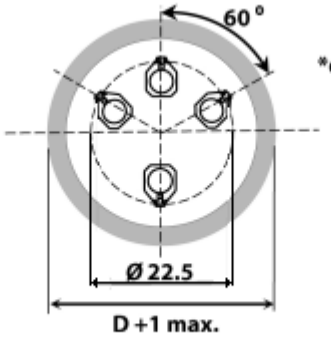

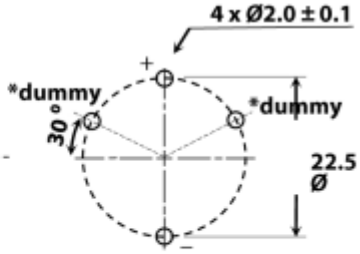

PC Board Mounting Holes

Available in 2 and 4 pins

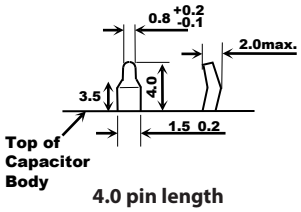

4.0 pin length option (add "A" to end of part#)

Five Pins
382L/LX (40 and 50mm diameter)

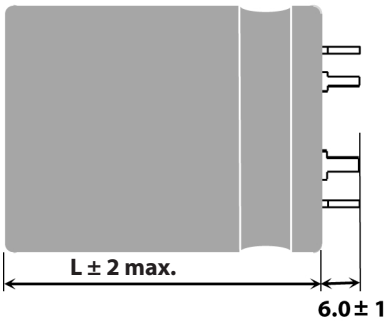

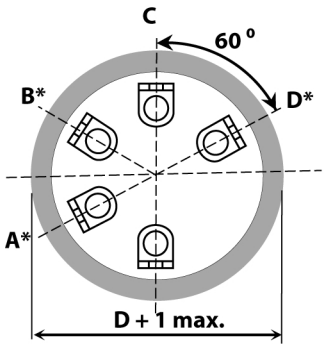

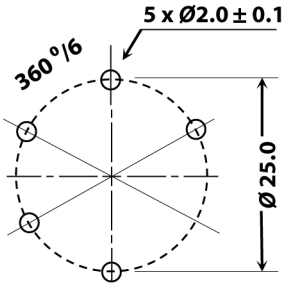

PC Board Mounting Holes

Available in 5 pins

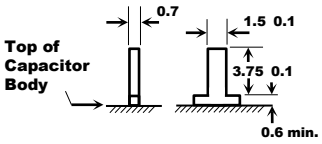

5 pin Standoff pin style (add "V" to end of part#)

	Connection	
Terminal	40 mm Dia.	50 mm Dia.
A	dummy	negative (–)
B	dummy	dummy
C	positive (+)	positive (+)
D	dummy	positive (+)
–	negative (–)	negative (–)

Notes:
* Use dummy terminals for mechanical support only. Make no electrical connection because they resistively connect through the electrolyte to the negative terminal.
** Safety Vent may be on the bottom or on the side of the can.

Type 380LX / 382LX 85 °C High Capacitance, Snap-In Aluminum

2, 4 and 5 pin styles available

Insulated Case Dimensions

Case Code	DIAMETER "D"		LENGTH "L"		Typical Weight
	mm	inches	mm	inches	(grams)
H20	22	0.87	20	0.79	14
H01	22	0.87	25	0.98	16
H02	22	0.87	30	1.18	19
H03	22	0.87	35	1.38	22
H04	22	0.87	40	1.57	24
H45	22	0.87	45	1.77	28
H05	22	0.87	50	1.97	31
J20	25	0.98	20	0.79	16
J01	25	0.98	25	0.98	20
J02	25	0.98	30	1.18	24
J03	25	0.98	35	1.38	27
J04	25	0.98	40	1.57	31
J45	25	0.98	45	1.77	35
J05	25	0.98	50	1.97	38
K20	30	1.18	20	0.79	25
K01	30	1.18	25	0.98	30
K02	30	1.18	30	1.18	35
K03	30	1.18	35	1.38	40
K04	30	1.18	40	1.57	44
K45	30	1.18	45	1.77	48
K05	30	1.18	50	1.97	53
A20	35	1.38	20	0.79	35
A01	35	1.38	25	0.98	42
A02	35	1.38	30	1.18	48
A03	35	1.38	35	1.38	54

Case Code	DIAMETER "D"		LENGTH "L"		Typical Weight
	mm	inches	mm	inches	(grams)
A04	35	1.38	40	1.57	62
A45	35	1.38	45	1.77	67
A05	35	1.38	50	1.97	74
A55	35	1.38	55	2.17	80
A06	35	1.38	63	2.48	88
A07	35	1.38	70	2.76	98
A08	35	1.38	80	3.15	112
A10	35	1.38	105	4.13	144
N04	40	1.57	40	1.57	82
N05	40	1.57	50	1.97	105
N06	40	1.57	63	2.48	130
N08	40	1.57	80	3.15	185
N10	40	1.57	105	4.13	265
E05	45	1.77	50	1.97	122
E06	45	1.77	63	2.48	150
E75	45	1.77	75	2.65	200
E08	45	1.77	80	3.15	213
E09	45	1.77	92	3.62	238
E10	45	1.77	105	4.13	299
B05	50	1.97	50	1.97	136
B06	50	1.97	63	2.48	168
B08	50	1.97	80	3.15	239
B09	50	1.97	92	3.62	241
B10	50	1.97	105	4.13	325

Typical Performance Curves

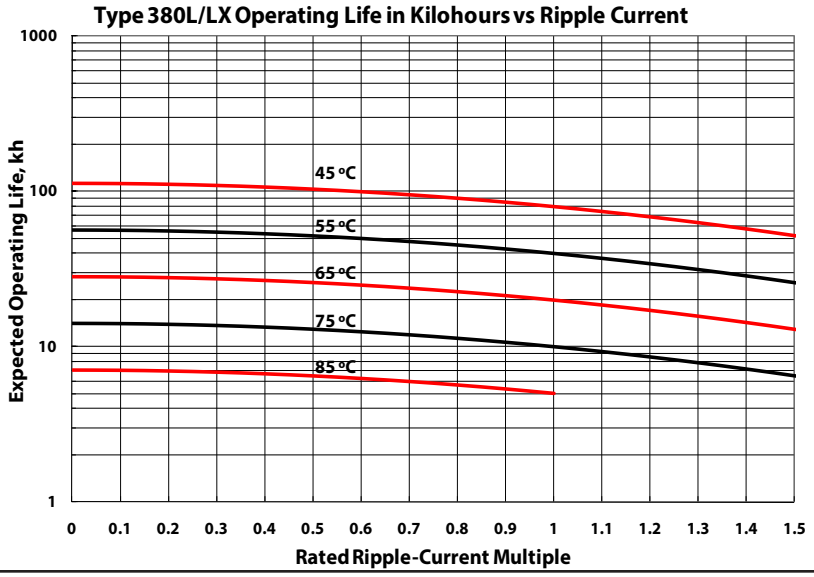

Type 380LX / 382LX 85 °C High Capacitance, Snap-In Aluminum

2, 4 and 5 pin styles available

Typical Performance Curves

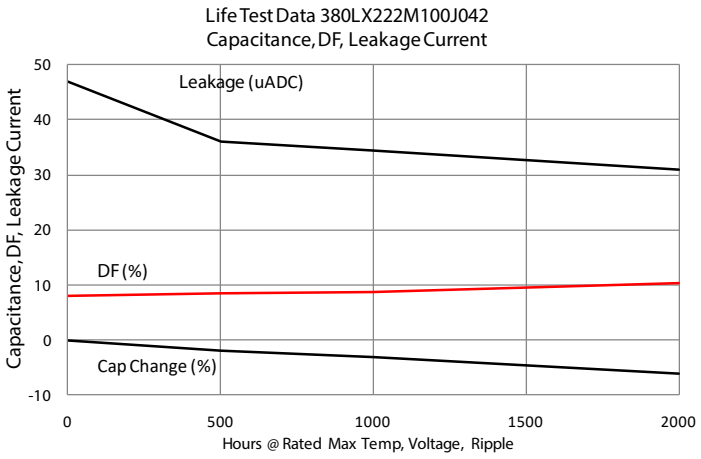

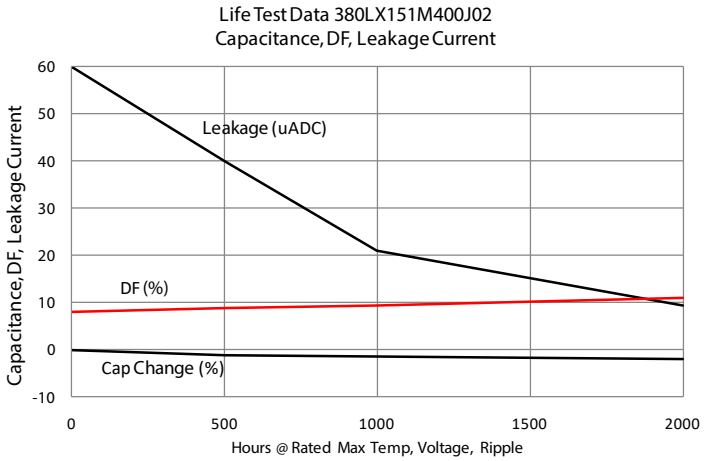

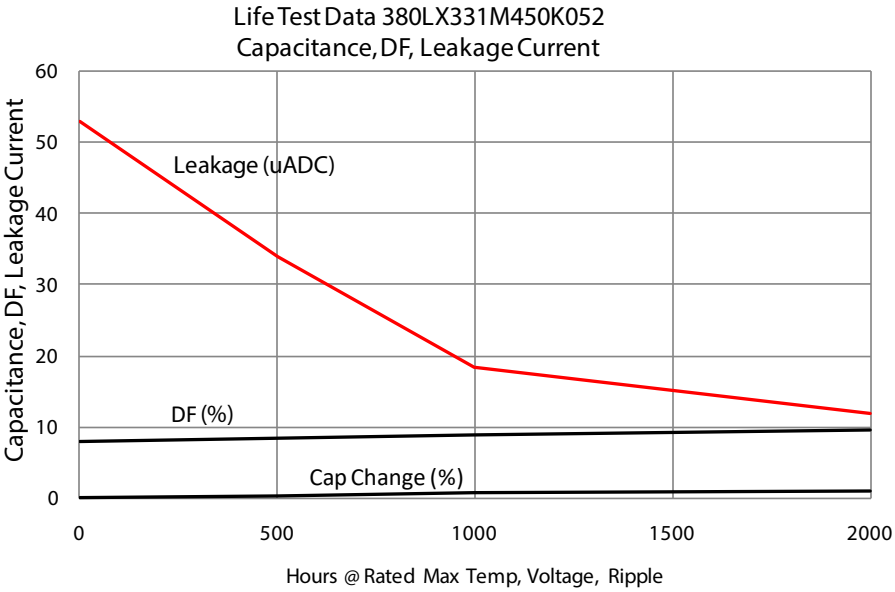

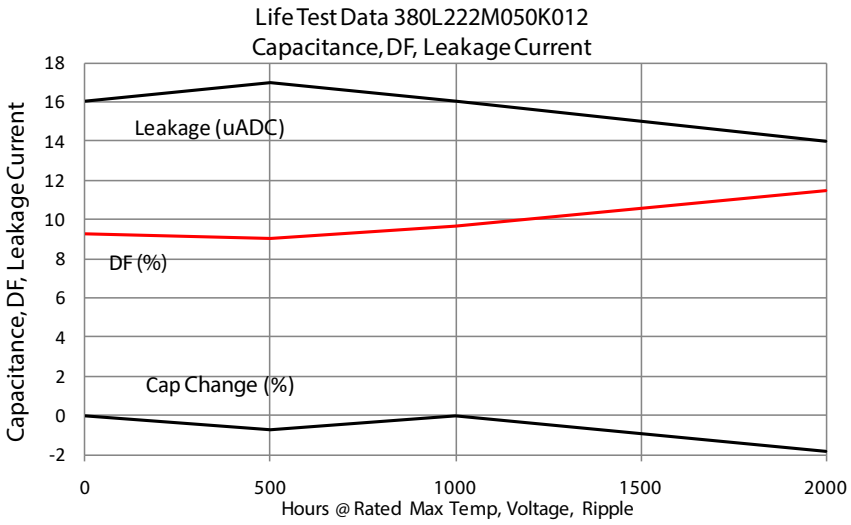

Type 380LX / 382LX 85 °C High Capacitance, Snap-In Aluminum

2, 4 and 5 pin styles available

Cap. (uF)	Catalog Part Number	Max. ESR @ +25°C 120 Hz (ohms)	Max. ESR @ +25°C 20 kHz (ohms)	Ripple Amps @ +85°C 120 Hz (A)	Ripple Amps @ +85°C 20 kHz (A)	Nominal Size D x L (mm)
16 Vdc (20 Vdc Surge)						
4700	380LX472M016H012	0.160	0.135	1.77	2.00	22 x 25
6800	380LX682M016H012	0.075	0.063	2.60	2.99	22 x 25
6800	380LX682M016J202	0.110	0.092	1.80	2.10	25 x 20
8200	380LX822M016H012	0.090	0.078	3.10	3.60	22 x 25
10000	380LX103M016H012	0.075	0.062	2.90	3.30	22 x 25
10000	380LX103M016J012	0.143	0.118	3.80	4.30	25 x 25
12000	380LX123M016H022	0.062	0.059	3.13	3.60	22 x 30
12000	380LX123M016J012	0.062	0.052	4.50	5.20	25 x 25
15000	380LX153M016H032	0.055	0.047	3.69	4.24	22 x 35
18000	380LX183M016H032	0.046	0.039	3.98	4.58	22 x 35
22000	380LX223M016H042	0.038	0.032	4.52	5.20	22 x 40
27000	380LX273M016J452	0.031	0.025	6.30	7.30	25 x 45
27000	380LX273M016K022	0.028	0.023	4.70	5.41	30 x 30
33000	380LX333M016J052	0.025	0.021	6.80	7.80	25 x 50
33000	380LX333M016K032	0.025	0.021	6.84	7.87	30 x 35
33000	380LX333M016K042	0.025	0.021	6.80	7.90	30 x 40
33000	380LX333M016A022	0.025	0.021	6.80	7.90	35 x 30
39000	380LX393M016K042	0.024	0.020	6.94	7.98	30 x 40
39000	380LX393M016A032	0.022	0.018	6.95	8.00	35 x 35
47000	380LX473M016K452	0.023	0.019	7.47	8.59	30 x 45
47000	380LX473M016K052	0.020	0.017	7.50	8.60	30 x 50
47000	380LX473M016A042	0.022	0.020	7.50	8.60	35 x 40
56000	380LX563M016A452	0.020	0.019	8.73	10.04	35 x 45
56000	382LX563M016N042	0.022	0.021	9.00	10.40	40 x 40
68000	380LX683M016A452	0.021	0.018	9.05	10.41	35 x 45
68000	380LX683M016A052	0.018	0.017	9.00	10.40	35 x 50
82000	380LX823M016A052	0.020	0.018	9.49	10.91	35 x 50
82000	382LX823M016N052	0.016	0.015	10.30	11.80	40 x 50
100000	380LX104M016A082	0.015	0.014	11.00	12.70	35 x 80
100000	382LX104M016N062	0.018	0.017	11.40	13.00	40 x 63
120000	380LX124M016A082	0.015	0.014	11.50	12.50	35 x 80
120000	382LX124M016N082	0.017	0.016	12.40	14.30	40 x 80
120000	382LX124M016B052V	0.014	0.013	13.17	15.15	50 x 50
150000	382LX154M016B062V	0.012	0.011	14.40	16.56	50 x 63
180000	382LX184M016N102	0.013	0.012	14.85	17.08	40 x 105
180000	382LX184M016B082V	0.011	0.010	15.69	18.04	50 x 80
220000	382LX224M016B092V	0.010	0.009	16.73	19.24	50 x 92
270000	382LX274M016B102V	0.009	0.008	17.79	20.46	50 x 105
25 Vdc (32 Vdc Surge)						
3300	380LX332M025H012	0.161	0.130	1.70	1.90	22 x 25
4700	380LX472M025H012	0.110	0.090	2.40	2.75	22 x 25
5600	380LX562M025H012	0.110	0.090	2.40	2.75	22 x 25

Cap. (uF)	Catalog Part Number	Max. ESR @ +25°C 120 Hz (ohms)	Max. ESR @ +25°C 20 kHz (ohms)	Ripple Amps @ +85°C 120 Hz (A)	Ripple Amps @ +85°C 20 kHz (A)	Nominal Size D x L (mm)
25 Vdc (32 Vdc Surge)						
6800	380LX682M025H022	0.078	0.063	2.63	3.01	22 x 30
6800	380LX682M025J012	0.078	0.063	3.50	4.00	25 x 25
8200	380LX822M025H022	0.081	0.065	2.86	3.29	22 x 30
8200	380LX822M025J012	0.065	0.049	3.60	4.10	25 x 25
10000	380LX103M025H032	0.058	0.046	3.80	4.30	22 x 35
10000	380LX103M025J022	0.058	0.046	3.80	4.30	25 x 30
12000	380LX123M025J022	0.055	0.044	4.10	4.72	25 x 30
15000	380LX153M025J032	0.044	0.035	4.63	5.32	25 x 35
15000	380LX153M025K022	0.040	0.030	4.60	5.30	30 x 30
18000	380LX183M025J042	0.037	0.029	5.47	6.29	25 x 40
18000	380LX183M025K032	0.035	0.028	5.50	6.30	30 x 35
22000	380LX223M025J452	0.030	0.024	6.10	7.00	25 x 45
22000	380LX223M025J052	0.030	0.023	6.10	7.00	25 x 50
22000	380LX223M025K042	0.030	0.023	6.10	7.00	30 x 40
27000	380LX273M025K042	0.025	0.020	6.21	7.14	30 x 40
27000	380LX273M025K452	0.023	0.020	6.20	7.10	30 x 45
27000	380LX273M025A032	0.023	0.020	6.20	7.10	35 x 35
33000	380LX333M025K452	0.020	0.017	6.84	7.87	30 x 45
33000	380LX333M025K052	0.030	0.016	6.84	7.90	30 x 50
33000	382L333M025N042	0.026	0.016	7.30	8.00	40 x 40
39000	380LX393M025A452	0.020	0.017	7.40	8.50	35 x 45
39000	382LX393M025N042	0.020	0.018	8.00	9.20	40 x 40
47000	380LX473M025A052	0.019	0.015	8.00	9.20	35 x 50
56000	382LX563M025N052	0.016	0.015	9.00	10.30	40 x 50
56000	382L563M025N062	0.015	0.009	9.50	10.30	40 x 63
68000	382LX683M025N062	0.017	0.015	10.25	11.80	40 x 63
82000	382LX823M025B052V	0.016	0.015	12.29	14.13	50 x 50
100000	380LX104M025A102	0.010	0.008	9.50	12.00	35 x 105
100000	382LX104M025N082	0.012	0.011	12.00	13.40	40 x 80
100000	382LX104M025B062V	0.014	0.013	13.45	15.47	50 x 63
120000	382LX124M025B082V	0.012	0.011	15.29	17.58	50 x 80
150000	382LX154M025N102	0.011	0.010	14.07	16.18	40 x 105
150000	382LX154M025B092V	0.011	0.010	16.01	18.41	50 x 92
180000	382LX184M025B102V	0.010	0.009	16.89	19.42	50 x 105
35 Vdc (44 Vdc Surge)						
2200	380LX222M035H012	0.166	0.125	1.50	1.75	22 x 25
3300	380LX332M035H012	0.110	0.085	2.30	2.60	22 x 25
3900	380LX392M035H012	0.095	0.070	2.70	3.10	22 x 25
4700	380LX472M035H022	0.080	0.060	3.30	3.70	22 x 30
4700	380LX472M035J012	0.080	0.060	3.30	3.70	25 x 25
5600	380LX562M035H022	0.083	0.063	3.40	3.90	22 x 30
5600	380LX562M035J012	0.083	0.063	3.40	3.90	25 x 25

Type 380LX / 382LX 85 °C High Capacitance, Snap-In Aluminum

2, 4 and 5 pin styles available

Cap. (uF)	Catalog Part Number	Max. ESR @ +25°C 120 Hz (ohms)	Max. ESR @ +25°C 20 kHz (ohms)	Ripple Amps @ +85°C 120 Hz (A)	Ripple Amps @ +85°C 20 kHz (A)	Nominal Size D x L (mm)
35 Vdc (44 Vdc Surge)						
6800	380LX682M035J022	0.073	0.055	2.60	2.99	25 x 30
8200	380LX822M035J022	0.071	0.053	3.26	3.75	25 x 30
8200	380LX822M035J032	0.057	0.043	4.00	4.60	25 x 35
10000	380LX103M035H452	0.050	0.037	4.40	5.10	22 x 45
10000	380LX103M035J022	0.058	0.044	4.42	5.08	25 x 30
10000	380LX103M035A012	0.050	0.037	4.40	5.10	35 x 25
12000	380LX123M035J042	0.048	0.036	5.05	5.81	25 x 40
15000	380LX153M035J052	0.036	0.027	5.60	6.40	25 x 50
15000	380LX153M035K042	0.036	0.027	5.60	6.40	30 x 40
15000	380LX153M035A022	0.036	0.027	5.60	6.40	35 x 30
18000	380LX183M035K452	0.480	0.037	5.70	6.50	30 x 45
18000	380LX183M035A032	0.480	0.037	5.70	6.50	35 x 35
22000	380LX223M035K452	0.026	0.020	6.10	7.02	30 x 45
22000	380LX223M035A042	0.026	0.020	6.10	7.00	35 x 40
27000	380LX273M035A452	0.021	0.017	6.80	7.90	35 x 45
27000	380LX273M035A052	0.021	0.016	6.84	7.87	35 x 50
33000	380LX333M035A052	0.018	0.014	7.15	8.22	35 x 50
39000	380LX393M035A052	0.017	0.014	7.91	9.10	35 x 50
39000	382LX393M035N052	0.017	0.014	8.00	9.20	40 x 50
47000	380LX473M035A552	0.014	0.014	8.56	9.84	35 x 55
47000	382LX473M035N062	0.016	0.013	9.60	11.00	40 x 63
56000	382LX563M035N082	0.015	0.012	10.30	11.90	40 x 80
56000	382LX563M035B052V	0.015	0.012	10.94	12.58	50 x 50
68000	380LX683M035A102	0.010	0.008	9.50	11.00	35 x 105
68000	382LX683M035B062V	0.013	0.011	11.93	13.72	50 x 63
82000	382LX823M035N102	0.012	0.009	12.02	13.82	40 x 105
82000	382LX823M035B082V	0.012	0.010	13.06	15.02	50 x 80
100000	382LX104M035B092V	0.011	0.009	13.97	16.07	50 x 92
120000	382LX124M035B102V	0.010	0.008	14.86	17.09	50 x 105
50 Vdc (63 Vdc Surge)						
1500	380LX152M050H012	0.220	0.170	1.25	1.45	22 x 25
2200	380LX222M050H012	0.150	0.115	1.80	2.10	22 x 25
2700	380LX272M050H012	0.154	0.115	2.20	2.60	22 x 25
3300	380LX332M050H012	0.151	0.113	2.41	2.77	22 x 25
3300	380LX332M050H022	0.100	0.075	2.70	3.10	22 x 30
3300	380LX332M050J012	0.100	0.075	2.70	3.10	25 x 25
3900	380LX392M050J012	0.085	0.065	2.80	3.20	25 x 25
4700	380LX472M050H032	0.070	0.055	3.00	3.50	22 x 35
4700	380LX472M050J012	0.080	0.060	2.10	2.40	25 x 25
4700	380LX472M050J022	0.070	0.055	3.00	3.50	25 x 30
4700	380LX472M050K012	0.070	0.055	3.00	3.50	30 x 25

Cap. (uF)	Catalog Part Number	Max. ESR @ +25°C 120 Hz (ohms)	Max. ESR @ +25°C 20 kHz (ohms)	Ripple Amps @ +85°C 120 Hz (A)	Ripple Amps @ +85°C 20 kHz (A)	Nominal Size D x L (mm)
50 Vdc (63 Vdc Surge)						
5600	380LX562M050J032	0.060	0.045	3.40	3.90	25 x 35
5600	380LX562M050K022	0.060	0.045	3.40	3.90	30 x 30
6800	380LX682M050H452	0.073	0.055	3.85	4.43	22 x 45
8200	380LX822M050J452	0.067	0.050	4.40	5.10	25 x 45
8200	380LX822M050K032	0.067	0.050	4.40	5.10	30 x 35
10000	380LX103M050J052	0.040	0.030	5.00	5.70	25 x 50
10000	380LX103M050K042	0.040	0.030	*5.00*	*5.70*	30 x 40
10000	380LX103M050A022	0.040	0.030	5.00	5.70	35 x 30
12000	380LX123M050K452	0.033	0.025	5.60	6.40	30 x 45
12000	380LX123M050A032	0.041	0.031	5.58	6.42	35 x 35
15000	380LX153M050A452	0.027	0.020	6.40	7.40	35 x 45
18000	380LX183M050A452	0.028	0.021	6.94	7.98	35 x 45
18000	382LX183M050N042	0.023	0.017	6.94	7.98	40 x 40
22000	380L223M050A052	0.023	0.018	7.57	8.71	35 x 50
22000	380LX223M050A052	0.025	0.020	7.60	8.71	35 x 50
27000	380L273M050A052	0.018	0.015	8.96	10.03	35 x 50
27000	382LX273M050N052	0.018	0.015	8.10	9.30	40 x 50
27000	382L273M050N062	0.018	0.009	9.00	9.60	40 x 63
33000	380LX333M050A082	0.015	0.012	9.20	10.60	35 x 80
33000	382LX333M050N062	0.018	0.014	9.10	10.50	40 x 63
33000	382LX333M050B052V	0.018	0.014	10.48	12.05	50 x 50
47000	380LX473M050A102	0.014	0.011	10.27	11.81	35 x 105
47000	382LX473M050B062V	0.013	0.010	11.54	13.27	50 x 63
56000	382LX563M050N102	0.012	0.009	11.47	13.19	40 x 105
56000	382LX563M050B082V	0.012	0.009	12.46	14.33	50 x 80
68000	382LX683M050B092V	0.011	0.009	13.17	15.15	50 x 92
82000	382LX823M050B102V	0.011	0.008	13.87	15.95	50 x 105
63 Vdc (79 Vdc Surge)						
1000	380LX102M063H012	0.332	0.250	1.20	1.40	22 x 25
1500	380LX152M063H012	0.221	0.167	1.70	2.00	22 x 25
2200	380LX222M063J012	0.151	0.114	2.50	2.90	25 x 25
2700	380LX272M063H042	0.126	0.094	2.72	3.13	22 x 40
3300	380LX332M063J022	0.106	0.080	3.13	3.60	25 x 30
3900	380LX392M063J022	0.106	0.080	3.13	3.60	25 x 30
4700	380LX472M063J032	0.080	0.060	3.99	4.56	25 x 35
4700	380LX472M063K022	0.080	0.060	4.90	5.60	30 x 30
4700	380LX472M063A012	0.080	0.060	4.90	5.60	35 x 25
5600	380LX562M063K022	0.070	0.050	4.11	4.72	30 x 30
6800	380LX682M063J052	0.060	0.045	5.80	6.70	25 x 50
6800	380LX682M063K042	0.060	0.045	5.80	6.70	30 x 40
8200	380LX822M063A032	0.050	0.040	6.00	6.90	35 x 35
10000	380LX103M063A042	0.033	0.025	6.50	7.50	35 x 40

Type 380LX / 382LX 85 °C High Capacitance, Snap-In Aluminum

2, 4 and 5 pin styles available

Cap. (uF)	Catalog Part Number	Max. ESR @ +25°C 120 Hz (ohms)	Max. ESR @ +25°C 20 kHz (ohms)	Ripple Amps @ +85°C 120 Hz (A)	Ripple Amps @ +85°C 20 kHz (A)	Nominal Size D x L (mm)
63 Vdc (79 Vdc Surge)						
10000	382L103M063N042	0.028	0.017	6.60	7.20	40 x 40
12000	380LX123M063K052	0.035	0.026	7.15	8.22	30 x 50
12000	382LX123M063N042	0.035	0.028	7.15	8.22	40 x 40
15000	380LX153M063A052	0.028	0.021	7.91	9.10	35 x 50
18000	380LX183M063A082	0.023	0.012	9.40	10.80	35 x 80
18000	382LX183M063N062	0.028	0.022	9.25	10.60	40 x 63
27000	380LX273M063A102	0.015	0.012	10.38	11.94	35 x 105
27000	382LX273M063N082	0.018	0.015	10.00	11.50	40 x 80
27000	382LX273M063B052V	0.018	0.015	10.86	12.49	50 x 50
33000	382LX333M063N102	0.015	0.012	11.76	13.52	40 x 105
33000	382LX333M063B062V	0.017	0.013	11.57	13.42	50 x 63
47000	382LX473M063B082V	0.013	0.010	12.78	14.70	50 x 80
51000	382LX513M063B092V	0.012	0.010	13.34	15.34	50 x 92
56000	382LX563M063B102V	0.012	0.009	13.93	16.02	50 x 105
80 Vdc (100 Vdc Surge)						
680	380LX681M080H012	0.390	0.295	1.00	1.20	22 x 25
1000	380LX102M080H012	0.265	0.200	1.50	1.75	22 x 25
1200	380LX122M080H022	0.235	0.176	1.80	2.10	22 x 30
1500	380LX152M080H022	0.177	0.134	2.30	2.60	22 x 30
1500	380LX152M080K202	0.200	0.150	1.40	1.60	30 x 20
1800	380LX182M080J032	0.147	0.109	2.50	2.90	25 x 35
2200	380LX222M080H452	0.121	0.092	2.70	3.10	22 x 45
2200	380LX222M080K012	0.121	0.092	2.70	3.10	30 x 25
2700	380LX272M080J042	0.123	0.092	2.78	3.20	25 x 40
3300	380LX332M080J042	0.100	0.075	3.21	3.69	25 x 40
3300	380LX332M080K022	0.085	0.065	3.20	3.70	30 x 30
3900	380LX392M080J452	0.080	0.060	3.60	4.10	25 x 45
3900	380LX392M080K042	0.085	0.064	3.59	4.13	30 x 40
4700	380LX472M080J052	0.065	0.050	4.10	4.70	25 x 50
4700	380LX472M080K042	0.071	0.053	4.09	4.70	30 x 40
5600	380LX562M080K452	0.059	0.044	4.55	5.23	30 x 45
5600	380LX562M080A032	0.055	0.040	4.60	5.20	35 x 35
6800	380LX682M080K052	0.049	0.037	5.16	5.93	30 x 50
6800	380LX682M080A042	0.045	0.035	5.20	5.90	35 x 40
8200	380LX822M080A052	0.040	0.030	5.80	6.70	35 x 50
8200	382LX822M080N042	0.040	0.030	5.83	6.70	40 x 40
10000	380LX103M080A052	0.033	0.025	6.40	7.34	35 x 50
12000	380L123M080A072	0.020	0.012	8.10	9.00	35 x 70
12000	382L123M080N052	0.025	0.016	7.50	8.00	40 x 50
15000	380L153M080A082	0.017	0.010	8.80	9.60	35 x 80
15000	382L153M080N062	0.020	0.013	8.50	9.20	40 x 63
18000	382L183M080N082	0.014	0.009	10.30	10.80	40 x 80

Cap. (uF)	Catalog Part Number	Max. ESR @ +25°C 120 Hz (ohms)	Max. ESR @ +25°C 20 kHz (ohms)	Ripple Amps @ +85°C 120 Hz (A)	Ripple Amps @ +85°C 20 kHz (A)	Nominal Size D x L (mm)
80 Vdc (100 Vdc Surge)						
18000	382LX183M080B052V	0.023	0.017	10.00	11.50	50 x 50
22000	380LX223M080A102	0.015	0.011	9.86	11.34	35 x 105
22000	382LX223M080B062V	0.019	0.014	11.08	12.74	50 x 63
27000	382LX273M080N102	0.015	0.012	11.35	13.05	40 x 105
27000	382LX273M080B082V	0.015	0.012	12.33	14.18	50 x 80
33000	382LX333M080B092V	0.014	0.010	13.37	15.38	50 x 92
39000	382LX393M080B102V	0.013	0.010	14.34	16.49	50 x 105
100 Vdc (125 Vdc Surge)						
470	380LX471M100H012	0.450	0.300	1.10	1.30	22 x 25
560	380LX561M100H012	0.400	0.250	1.30	1.50	22 x 25
680	380LX681M100H012	0.100	0.250	1.30	1.50	22 x 25
1000	380LX102M100H022	0.220	0.150	2.00	2.30	22 x 30
1000	380LX102M100J012	0.220	0.150	2.00	2.30	25 x 25
1200	380LX122M100H032	0.195	0.125	1.80	2.70	22 x 35
1500	380LX152M100H042	0.155	0.100	2.60	3.00	22 x 40
1800	380LX182M100H042	0.140	0.090	2.80	3.30	22 x 40
2200	380LX222M100J042	0.121	0.080	3.14	3.61	25 x 40
2700	380LX272M100J452	0.104	0.068	3.70	4.30	25 x 45
2700	380LX272M100A022	0.092	0.060	3.71	4.27	35 x 30
3300	380LX332M100J052	0.090	0.060	4.10	4.70	25 x 50
3300	380LX332M100K042	0.090	0.060	4.10	4.70	30 x 40
3300	380LX332M100A022	0.100	0.065	4.07	4.68	35 x 30
3900	380LX392M100K452	0.080	0.050	4.50	5.20	30 x 45
3900	380LX392M100K052	0.085	0.055	4.54	5.22	30 x 50
4700	380LX472M100K052	0.071	0.046	5.13	5.90	30 x 50
4700	380LX472M100A042	0.070	0.050	5.10	5.90	35 x 40
5600	380LX562M100A052	0.059	0.041	5.75	6.61	35 x 50
5600	382LX562M100N042	0.060	0.045	5.80	6.60	40 x 40
6800	380LX682M100A052	0.049	0.034	6.60	7.59	35 x 50
6800	382L682M100N052	0.026	0.017	7.40	7.90	40 x 50
8200	382LX822M100N052	0.040	0.030	7.30	8.40	40 x 50
8200	382L822M100N062	0.021	0.013	8.40	9.10	40 x 63
10000	380LX103M100A082	0.033	0.025	8.70	9.60	35 x 80
10000	382LX103M100N062	0.033	0.025	8.00	9.20	40 x 63
10000	382LX103M100B052V	0.033	0.025	8.82	10.14	50 x 50
12000	380LX123M100A102	0.028	0.021	8.57	9.86	35 x 105
12000	382LX123M100N082	0.028	0.021	8.65	10.00	40 x 80
15000	382LX153M100N102	0.022	0.017	10.12	11.64	40 x 105
15000	382LX153M100B062V	0.022	0.017	10.07	11.58	50 x 63
18000	382LX183M100B082V	0.018	0.014	11.00	12.65	50 x 80
22000	382LX223M100B092V	0.015	0.011	11.76	13.52	50 x 92
27000	382LX273M100B102V	0.014	0.010	12.53	14.41	50 x 105

Type 380LX / 382LX 85 °C High Capacitance, Snap-In Aluminum

2, 4 and 5 pin styles available

Cap. (uF)	Catalog Part Number	Max. ESR @ +25°C 120 Hz (ohms)	Max. ESR @ +25°C 20 kHz (ohms)	Ripple Amps @ +85°C 120 Hz (A)	Ripple Amps @ +85°C 20 kHz (A)	Nominal Size D x L (mm)
160 Vdc (200 Vdc Surge)						
220	380LX221M160H012	0.850	0.420	0.90	1.25	22 x 25
270	380LX271M160H012	0.700	0.340	1.20	1.65	22 x 25
330	380LX331M160H012	0.600	0.310	1.50	2.00	22 x 25
390	380LX391M160H012	0.470	0.240	1.60	2.30	22 x 25
470	380LX471M160H022	0.420	0.220	1.86	2.66	22 x 30
560	380LX561M160H032	0.360	0.180	2.25	3.15	22 x 35
680	380LX681M160H042	0.296	0.130	2.36	2.39	22 x 40
820	380LX821M160J042	0.243	0.109	2.75	3.85	25 x 40
1000	380LX102M160J042	0.220	0.110	3.00	4.20	25 x 40
1200	380LX122M160K032	0.210	0.115	3.25	4.55	30 x 35
1800	380LX182M160K052	0.140	0.085	4.20	5.90	30 x 50
2700	380LX272M160A052	0.086	0.043	5.30	7.42	35 x 50
2700	382LX272M160N042	0.080	0.045	5.50	7.60	40 x 40
4700	382L472M160N082	0.036	0.020	6.60	8.50	40 x 80
5600	382LX562M160N082	0.040	0.020	8.30	11.70	40 x 80
5600	382LX562M160B052V	0.040	0.020	8.25	9.50	50 x 50
6800	380LX682M160N102	0.038	0.021	8.90	12.46	40 x 105
8200	382LX822M160B062V	0.026	0.015	8.90	12.50	50 x 63
10000	382LX103M160N102	0.022	0.012	9.90	13.80	40 x 105
10000	382LX103M160B082V	0.022	0.012	9.80	13.70	50 x 80
12000	382LX123M160B092V	0.018	0.010	12.90	18.10	50 x 92
15000	382LX153M160B102V	0.014	0.008	14.10	19.70	50 x 105
180 Vdc (225 Vdc Surge)						
330	380LX331M180H012	0.603	0.308	1.50	2.00	22 x 25
390	380LX391M180H022	0.510	0.230	1.68	2.35	22 x 30
470	380LX471M180H022	0.423	0.190	1.91	2.67	22 x 30
560	380LX561M180H042	0.355	0.160	2.25	3.15	22 x 40
680	380LX681M180J032	0.293	0.132	2.22	3.11	25 x 35
820	380LX821M180K022	0.240	0.120	2.80	3.90	30 x 30
1000	380LX102M180J052	0.220	0.100	3.00	4.20	25 x 50
1200	380LX122M180J052	0.170	0.080	3.31	4.63	25 x 50
1500	380LX152M180K052	0.130	0.070	3.80	5.40	30 x 50
1800	380LX182M180K052	0.120	0.050	4.32	6.05	30 x 50
2200	380LX222M180A052	0.090	0.050	4.90	6.90	35 x 50
2700	382L272M180N062	0.051	0.027	5.00	6.50	40 x 63
4700	382L472M180N082	0.036	0.020	6.60	8.50	40 x 80
200 Vdc (250 Vdc Surge)						
150	380LX151M200H012	1.330	0.600	0.65	0.90	22 x 25
220	380LX221M200H012	0.900	0.420	1.00	1.45	22 x 25
270	380LX271M200H012	0.730	0.300	1.40	2.00	22 x 25
330	380LX331M200H022	0.600	0.270	1.60	2.20	22 x 30
330	380LX331M200J012	0.470	0.210	1.70	2.40	25 x 25
200 Vdc (250 Vdc Surge)						
390	380LX391M200H022	0.510	0.230	1.68	2.35	22 x 30
390	380LX391M200J012	0.470	0.210	1.70	2.40	25 x 25
470	380LX471M200J022	0.420	0.190	1.90	2.60	25 x 30
470	380LX471M200A202	0.460	0.210	1.30	1.80	35 x 20
560	380LX561M200H042	0.360	0.160	2.18	3.08	22 x 40
680	380LX681M200H452	0.290	0.130	2.70	3.80	22 x 45
680	380LX681M200J032	0.270	0.120	2.70	3.80	25 x 35
680	380LX681M200K022	0.270	0.120	2.70	3.80	30 x 30
820	380LX821M200H452	0.243	0.124	2.90	4.10	22 x 45
820	380LX821M200J042	0.240	0.110	2.60	3.60	25 x 40
820	380LX821M200K022	0.220	0.100	2.90	4.10	30 x 30
1000	380LX102M200J452	0.199	0.090	3.25	4.55	25 x 45
1000	380LX102M200K022	0.199	0.102	3.30	4.60	30 x 30
1000	380LX102M200K032	0.216	0.097	3.20	4.50	30 x 35
1200	380LX122M200J052	0.144	0.072	3.87	5.42	25 x 50
1200	380LX122M200K042	0.166	0.075	3.50	4.90	30 x 40
1200	380LX122M200A022	0.166	0.075	3.50	4.90	35 x 30
1500	380LX152M200K452	0.144	0.072	3.87	5.42	30 x 45
1500	380LX152M200A032	0.144	0.072	3.87	5.42	35 x 35
1800	380LX182M200K052	0.120	0.060	4.32	6.05	30 x 50
1800	380LX182M200A042	0.120	0.060	4.32	6.05	35 x 40
2200	380LX222M200A452	0.098	0.054	4.92	6.89	35 x 45
2200	382LX222M200N042	0.098	0.054	4.92	6.89	40 x 40
2700	380LX272M200A062	0.080	0.045	5.50	7.70	35 x 63
2700	382LX272M200N052	0.080	0.045	5.40	7.60	40 x 50
3300	380LX332M200A082	0.065	0.037	6.40	9.00	35 x 80
3300	382LX332M200N062	0.065	0.037	6.30	8.90	40 x 63
3900	380LX392M200A082	0.055	0.030	6.60	9.25	35 x 80
3900	382LX392M200N062	0.055	0.030	6.80	9.50	40 x 63
3900	382LX392M200B052V	0.055	0.030	8.22	9.45	50 x 50
4700	382LX472M200N082	0.046	0.025	8.38	11.73	40 x 80
4700	382LX472M200B062V	0.046	0.025	9.32	13.05	50 x 63
5600	380LX562M200N102	0.040	0.020	8.90	12.46	40 x 105
6800	382LX682M200N102	0.032	0.017	8.65	12.11	40 x 105
6800	382LX682M200B082V	0.032	0.017	11.41	15.97	50 x 80
7500	382LX752M200B092V	0.029	0.016	12.28	17.19	50 x 92
8200	382LX822M200B102V	0.026	0.014	13.16	18.42	50 x 105
250 Vdc (300 Vdc Surge)						
120	380LX121M250H012	1.660	0.850	0.50	0.60	22 x 25
150	380LX151M250H012	1.330	0.460	1.00	1.25	22 x 25
180	380LX181M250H012	1.110	0.550	1.10	1.50	22 x 25
220	380LX221M250H012	0.900	0.450	1.30	1.70	22 x 25

Type 380LX / 382LX 85 °C High Capacitance, Snap-In Aluminum

2, 4 and 5 pin styles available

Cap. (uF)	Catalog Part Number	Max. ESR @ +25°C 120 Hz (ohms)	Max. ESR @ +25°C 20 kHz (ohms)	Ripple Amps @ +85°C 120 Hz (A)	Ripple Amps @ +85°C 20 kHz (A)	Nominal Size D x L (mm)
250 Vdc (300 Vdc Surge)						
270	380LX271M250H022	0.620	0.250	1.30	1.80	22 x 30
330	380LX331M250H042	0.600	0.300	1.66	2.32	22 x 40
330	380LX331M250J022	0.550	0.220	1.80	2.50	25 x 30
390	380LX391M250J032	0.510	0.260	1.91	2.67	25 x 35
470	380LX471M250J032	0.420	0.190	2.11	2.95	25 x 35
470	380LX471M250J042	0.039	1.550	2.10	3.00	25 x 40
560	380LX561M250J032	0.360	0.160	2.25	3.15	25 x 35
560	380LX561M250K022	0.326	0.130	2.30	3.20	30 x 30
680	380LX681M250J452	0.270	0.110	2.50	3.50	25 x 45
680	380LX681M250K032	0.268	0.107	2.50	3.50	30 x 35
820	380LX821M250K042	0.222	0.089	2.80	3.90	30 x 40
820	380LX821M250A022	0.222	0.089	2.80	3.90	35 x 30
1000	380LX102M250K452	0.182	0.073	3.32	4.65	30 x 45
1000	380LX102M250A032	0.182	0.073	3.32	4.65	35 x 35
1200	380LX122M250A042	0.166	0.083	3.53	4.94	35 x 40
1500	380LX152M250A052	0.133	0.068	4.00	5.70	35 x 50
1500	382LX152M250N042	0.133	0.066	4.04	5.66	40 x 40
1800	380LX182M250A062	0.110	0.055	4.50	6.30	35 x 63
1800	382LX182M250N052	0.110	0.055	4.50	6.30	40 x 50
1800	382L182M250N062	0.062	0.030	4.80	6.40	40 x 63
2200	380LX222M250A062	0.090	0.045	4.70	6.60	35 x 63
2200	380LX222M250A082	0.090	0.045	4.90	6.90	35 x 80
2200	382LX222M250N062	0.090	0.045	4.90	6.90	40 x 63
2700	380LX272M250A082	0.074	0.037	5.60	7.90	35 x 80
2700	382LX272M250N062	0.074	0.037	5.80	8.10	40 x 63
2700	382L272M250N082	0.043	0.021	6.30	8.40	40 x 80
2700	382LX272M250B052V	0.074	0.037	6.77	7.79	50 x 50
3300	382LX332M250N082	0.060	0.030	7.00	9.80	40 x 80
3300	382LX332M250B062V	0.060	0.030	7.79	10.91	50 x 63
3900	382LX392M250N082	0.051	0.026	7.35	10.30	40 x 80
3900	380LX392M250N102	0.060	0.040	7.47	10.46	40 x 105
4700	382LX472M250N102	0.042	0.021	8.88	12.43	40 x 105
4700	382LX472M250B082V	0.042	0.021	9.65	13.51	50 x 80
5600	382LX562M250B092V	0.036	0.018	10.80	15.12	50 x 92
6800	382LX682M250B102V	0.029	0.015	12.16	17.02	50 x 105
315 Vdc (365 Vdc Surge)						
100	380LX101M315H012	1.930	1.020	0.90	1.30	22 x 25
120	380LX121M315H012	1.660	0.860	1.00	1.40	22 x 25
150	380LX151M315H022	1.330	0.600	1.10	1.60	22 x 30
180	380LX181M315H022	1.110	0.550	1.21	1.69	22 x 30
220	380LX221M315H032	0.900	0.450	1.41	1.97	22 x 35
270	380LX271M315J032	0.740	0.370	1.60	2.24	25 x 35

Cap. (uF)	Catalog Part Number	Max. ESR @ +25°C 120 Hz (ohms)	Max. ESR @ +25°C 20 kHz (ohms)	Ripple Amps @ +85°C 120 Hz (A)	Ripple Amps @ +85°C 20 kHz (A)	Nominal Size D x L (mm)
315 Vdc (365 Vdc Surge)						
270	380LX271M315K022	0.737	0.376	1.60	2.20	30 x 30
330	380LX331M315J042	0.600	0.300	1.82	2.55	25 x 40
330	380LX331M315K022	0.603	0.308	1.80	2.50	30 x 30
390	380LX391M315J042	0.510	0.260	2.01	2.81	25 x 40
390	380LX391M315K032	0.510	0.260	2.00	2.80	30 x 35
390	380LX391M315A022	0.510	0.260	2.00	2.80	35 x 30
470	380LX471M315K042	0.423	0.216	2.30	3.20	30 x 40
470	380LX471M315A032	0.423	0.216	2.30	3.20	35 x 35
560	380LX561M315K452	0.355	0.181	2.60	3.60	30 x 45
560	380LX561M315A032	0.355	0.181	2.60	3.60	35 x 35
680	380LX681M315A452	0.293	0.149	2.90	4.00	35 x 45
820	380LX821M315A052	0.243	0.124	3.30	4.60	35 x 50
1000	380L102M315A062	0.218	0.129	2.70	3.60	35 x 63
1200	380L122M315A072	0.182	0.107	3.20	4.20	35 x 70
1200	382L122M315N052	0.202	0.122	2.90	3.90	40 x 50
1500	380L152M315A082	0.153	0.090	3.60	4.80	35 x 80
1500	382L152M315N062	0.162	0.098	3.40	4.50	40 x 63
1800	382L182M315N082	0.113	0.069	4.50	6.00	40 x 80
350 Vdc (400 Vdc Surge)						
82	380LX820M350H012	2.430	1.240	0.83	1.16	22 x 25
100	380LX101M350H022	1.990	1.020	0.70	1.10	22 x 30
120	380LX121M350H022	1.660	0.750	1.00	1.40	22 x 30
150	380LX151M350H022	1.330	0.600	1.10	1.60	22 x 30
180	380LX181M350H022	1.110	0.500	1.20	1.70	22 x 30
220	380LX221M350H042	0.900	0.410	1.44	2.00	22 x 40
270	380LX271M350H452	0.740	0.380	1.66	2.32	22 x 45
270	380LX271M350K022	0.614	0.215	1.66	2.32	30 x 30
330	380LX331M350J042	0.600	0.300	1.88	2.63	25 x 40
330	380LX331M350K032	0.500	0.180	1.90	2.60	30 x 35
330	380LX331M350A022	0.500	0.180	1.90	2.60	35 x 30
390	380LX391M350J452	0.510	0.230	1.80	2.50	25 x 45
390	380LX391M350K042	0.425	0.149	2.06	2.88	30 x 40
390	380LX391M350A022	0.425	0.149	2.06	2.88	35 x 30
470	380LX471M350K052	0.390	0.140	2.40	3.40	30 x 50
470	380LX471M350A032	0.390	0.140	2.40	3.40	35 x 35
560	380LX561M350K052	0.326	0.114	2.60	3.64	30 x 50
560	380LX561M350A042	0.326	0.114	2.60	3.64	35 x 40
680	380LX681M350A452	0.293	0.117	2.96	4.14	35 x 45
680	382LX681M350N042	0.293	0.117	3.00	4.10	40 x 40
820	380LX821M350A052	0.243	0.097	3.55	4.97	35 x 50
1000	380LX102M350A062	0.250	0.110	3.80	5.30	35 x 63
1000	382LX102M350N052	0.250	0.110	3.80	5.30	40 x 50

Type 380LX / 382LX 85 °C High Capacitance, Snap-In Aluminum

2, 4 and 5 pin styles available

Cap. (uF)	Catalog Part Number	Max. ESR @ +25°C 120 Hz (ohms)	Max. ESR @ +25°C 20 kHz (ohms)	Ripple Amps @ +85°C 120 Hz (A)	Ripple Amps @ +85°C 20 kHz (A)	Nominal Size D x L (mm)
350 Vdc (400 Vdc Surge)						
1200	380LX122M350A082	0.210	0.095	4.40	6.20	35 x 80
1200	382LX122M350N062	0.210	0.095	4.40	6.20	40 x 63
1200	382LX122M350B052V	0.207	0.093	5.18	5.96	50 x 50
1500	382LX152M350B062V	0.166	0.075	6.01	8.41	50 x 63
1800	380LX182M350A102	0.140	0.060	5.79	8.11	35 x 105
1800	382LX182M350N082	0.138	0.062	5.85	8.20	40 x 80
1800	382LX182M350B082V	0.138	0.062	6.89	9.65	50 x 80
2200	382LX222M350N102	0.113	0.051	6.91	9.67	40 x 105
2200	382LX222M350B092V	0.113	0.051	7.79	10.91	50 x 92
2700	382LX272M350B102V	0.092	0.041	8.80	12.32	50 x 105
400 Vdc (450 Vdc Surge)						
47	380LX470M400H012	4.500	1.600	0.30	0.42	22 x 25
68	380LX680M400H012	2.930	1.000	0.35	0.50	22 x 25
82	380LX820M400H012	2.440	0.850	0.70	0.95	22 x 25
100	380LX101M400H012	1.990	0.900	0.90	1.30	22 x 25
100	380LX101M400H022	1.650	0.580	0.90	1.30	22 x 30
100	380LX101M400J012	1.650	0.580	0.90	1.30	25 x 25
120	380LX121M400H022	1.660	0.750	1.00	1.40	22 x 30
150	380LX151M400H032	1.330	0.460	1.20	1.60	22 x 35
150	380LX151M400J022	1.100	0.390	1.20	1.60	25 x 30
180	380LX181M400J032	1.100	0.500	1.30	1.85	25 x 35
220	380LX221M400J022	0.900	0.450	1.49	2.09	25 x 30
220	380LX221M400K022	0.750	0.260	1.50	2.10	30 x 30
270	380LX271M400J452	0.680	0.240	1.70	2.30	25 x 45
270	380LX271M400K022	0.740	0.370	1.67	2.34	30 x 30
270	380LX271M400K032	0.680	0.240	1.70	2.30	30 x 35
270	380LX271M400A022	0.680	0.240	1.70	2.30	35 x 30
330	380LX331M400K042	0.550	0.200	1.90	2.70	30 x 40
330	380LX331M400A022	0.550	0.200	1.90	2.70	35 x 30
330	380LX331M400A032	0.502	0.201	1.40	1.90	35 x 35
390	380LX391M400J452	0.470	0.160	2.10	3.00	25 x 45
390	380LX391M400K452	0.470	0.160	2.10	3.00	30 x 45
390	380LX391M400A032	0.470	0.160	2.10	3.00	35 x 35
470	380LX471M400A042	0.388	0.136	2.39	3.35	35 x 40
560	380LX561M400A452	0.326	0.114	2.69	3.77	35 x 45
560	382LX561M400N042	0.326	0.114	2.70	3.80	40 x 40
680	380LX681M400A052	0.270	0.095	3.00	4.20	35 x 50
680	382LX681M400N052	0.270	0.095	3.40	4.70	40 x 50
820	380LX821M400A062	0.222	0.078	3.55	4.97	35 x 63
820	382LX821M400N052	0.222	0.078	3.40	4.70	40 x 50
1000	380L102M400A082	0.179	0.099	3.60	4.80	35 x 80
1000	382LX102M400N062	0.199	0.127	4.20	5.80	40 x 63

Cap. (uF)	Catalog Part Number	Max. ESR @ +25°C 120 Hz (ohms)	Max. ESR @ +25°C 20 kHz (ohms)	Ripple Amps @ +85°C 120 Hz (A)	Ripple Amps @ +85°C 20 kHz (A)	Nominal Size D x L (mm)
400 Vdc (450 Vdc Surge)						
1000	382LX102M400B052V	0.199	0.080	4.76	5.47	50 x 50
1200	380LX122M400A082	0.152	0.053	4.52	6.33	35 x 80
1200	382LX122M400N062	0.152	0.053	4.52	6.33	40 x 63
1200	382LX122M400B062V	0.166	0.066	5.47	7.66	50 x 63
1500	380LX152M400A102	0.120	0.040	5.44	7.62	35 x 105
1500	382LX152M400N082	0.122	0.043	5.50	7.70	40 x 80
1500	382LX152M400B082V	0.133	0.053	6.47	9.06	50 x 80
1800	382LX182M400N102	0.101	0.035	6.53	9.14	40 x 105
1800	382LX182M400B092V	0.111	0.044	7.35	10.29	50 x 92
2200	382LX222M400B102V	0.090	0.036	8.43	11.80	50 x 105
420 Vdc (470 Vdc Surge)						
82	380LX820M420H012	2.430	0.850	0.80	1.15	22 x 25
100	380LX101M420H022	1.820	0.820	0.90	1.30	22 x 30
120	380LX121M420H022	1.660	0.750	0.90	1.30	22 x 30
150	380LX151M420H042	1.330	0.600	1.15	1.60	22 x 40
180	380LX181M420H042	1.110	0.500	1.45	2.00	22 x 40
180	380LX181M420K022	1.100	0.390	1.45	2.00	30 x 30
220	380LX221M420H452	0.900	0.410	1.50	2.10	22 x 45
220	380LX221M420K022	0.900	0.320	1.50	2.10	30 x 30
270	380LX271M420J452	0.740	0.330	1.70	2.30	25 x 45
270	380LX271M420K032	0.740	0.260	1.70	2.30	30 x 35
270	380LX271M420A022	0.740	0.260	1.70	1.93	35 x 30
330	380LX331M420K452	0.600	0.210	1.90	2.68	30 x 45
330	380LX331M420A032	0.600	0.210	1.90	2.68	35 x 35
390	380LX391M420K052	0.500	0.180	2.10	3.00	30 x 50
390	380LX391M420A042	0.500	0.180	2.10	3.00	35 x 40
470	380LX471M420A452	0.420	0.150	2.40	3.35	35 x 45
560	380LX561M420A052	0.355	0.125	2.70	3.80	35 x 50
450 Vdc (500 Vdc Surge)						
33	380LX330M450H012	6.030	2.400	0.40	0.57	22 x 25
47	380LX470M450H202	4.230	1.690	0.30	0.40	22 x 20
56	380LX560M450H012	3.550	1.600	0.70	1.00	22 x 25
68	380LX680M450H012	2.930	1.020	0.80	1.10	22 x 25
82	380LX820M450H012	2.000	0.810	0.80	1.20	22 x 25
82	380LX820M450H022	2.430	1.210	0.83	1.16	22 x 30
100	380LX101M450H022	1.990	0.790	0.90	1.30	22 x 30
120	380LX121M450H022	1.659	0.661	1.00	1.50	22 x 30
120	380LX121M450H032	1.660	0.750	0.90	1.35	22 x 35
120	380LX121M450J012	1.380	0.550	1.00	1.50	25 x 25
150	380LX151M450H032	1.330	0.590	1.18	1.66	22 x 35
150	380LX151M450K022	1.100	0.440	1.20	1.70	30 x 30
180	380LX181M450J032	1.110	0.380	1.20	1.75	25 x 35

Type 380LX / 382LX 85 °C High Capacitance, Snap-In Aluminum

2, 4 and 5 pin styles available

Cap. (uF)	Catalog Part Number	Max. ESR @ +25°C 120 Hz (ohms)	Max. ESR @ +25°C 20 kHz (ohms)	Ripple Amps @ +85°C 120 Hz (A)	Ripple Amps @ +85°C 20 kHz (A)	Nominal Size D x L (mm)
450 Vdc (500 Vdc Surge)						
180	380LX181M450K012	0.921	0.368	1.40	1.90	30 x 25
180	380LX181M450K022	0.921	0.368	1.35	1.89	30 x 30
220	380LX221M450H452	0.754	0.301	1.40	2.00	22 x 45
220	380LX221M450J452	0.750	0.300	1.40	2.00	25 x 45
220	380LX221M450J052	0.754	0.301	1.55	2.17	25 x 50
220	380LX221M450K032	0.754	0.301	1.55	2.17	30 x 35
220	380LX221M450A022	0.904	0.461	1.60	2.20	35 x 30
270	380LX271M450K452	0.680	0.270	1.80	2.50	30 x 45
270	380LX271M450A022	0.680	0.270	1.80	2.50	35 x 30
330	380LX331M450K052	0.550	0.250	2.00	2.80	30 x 50
330	380LX331M450A032	0.553	0.221	2.01	2.81	35 x 35
390	380LX391M450A452	0.510	0.260	2.20	3.10	35 x 45
470	380LX471M450A452	0.423	0.233	2.53	3.54	35 x 45
470	382LX471M450N042	0.423	0.233	2.53	3.54	40 x 40
560	380LX561M450A052	0.355	0.171	2.50	3.50	35 x 50
560	380LX561M450A062	0.355	0.195	2.90	4.10	35 x 63
680	380L681M450A072	0.226	0.120	3.20	4.20	35 x 70
680	382LX681M450N052	0.290	0.160	3.15	4.40	40 x 50
680	382L681M450N062	0.201	0.109	3.40	4.50	40 x 63
820	380LX821M450A082	0.243	0.133	3.80	5.30	35 x 80
820	382LX821M450N062	0.243	0.133	3.70	5.20	40 x 63
820	382LX821M450B052V	0.263	0.145	4.31	4.96	50 x 50
1000	382LX102M450N082	0.216	0.119	4.20	5.90	40 x 80
1000	382LX102M450B062V	0.216	0.119	4.96	6.94	50 x 63
1200	380LX122M450A102	0.170	0.090	4.80	6.72	35 x 105
1200	382LX122M450N082	0.166	0.091	4.85	6.80	40 x 80
1200	382LX122M450B082V	0.180	0.099	5.71	7.99	50 x 80
1500	382LX152M450N102	0.133	0.073	5.81	8.13	40 x 105
1500	382LX152M450B092V	0.144	0.079	6.55	9.17	50 x 92
1800	382LX182M450B102V	0.120	0.066	7.38	10.30	50 x 105
500 Vdc (550 Vdc Surge)						
33	380LX330M500H012	4.420	2.652	0.60	0.80	22 x 25
47	380LX470M500H012	3.500	2.100	0.63	0.88	22 x 25
56	380LX560M500H022	2.980	1.788	0.70	0.98	22 x 30
68	380LX680M500H032	2.720	1.632	0.78	1.09	22 x 35
68	380LX680M500J012	2.720	1.632	0.78	1.09	25 x 25
82	380LX820M500H042	2.455	1.473	0.88	1.23	22 x 40
82	380LX820M500J022	2.455	1.473	0.88	1.23	25 x 30
82	380LX820M500K012	2.455	1.473	0.90	1.20	30 x 25
100	380LX101M500H452	2.013	1.208	0.99	1.39	22 x 45
100	380LX101M500J032	2.013	1.208	0.99	1.39	25 x 35
100	380LX101M500J042	2.013	1.208	1.10	1.50	25 x 40

Cap. (uF)	Catalog Part Number	Max. ESR @ +25°C 120 Hz (ohms)	Max. ESR @ +25°C 20 kHz (ohms)	Ripple Amps @ +85°C 120 Hz (A)	Ripple Amps @ +85°C 20 kHz (A)	Nominal Size D x L (mm)
500 Vdc (550 Vdc Surge)						
100	380LX101M500K022	2.013	1.208	1.10	1.50	30 x 30
100	380LX101M500A012	2.013	1.208	1.10	1.50	35 x 25
120	380LX121M500H052	1.678	1.007	1.13	1.58	22 x 50
120	380LX121M500J042	1.678	1.007	1.13	1.58	25 x 40
120	380LX121M500K022	1.678	1.007	1.13	1.58	30 x 30
120	380LX121M500K032	1.678	1.007	1.40	1.90	30 x 35
120	380LX121M500A022	1.678	1.007	1.40	1.90	35 x 30
150	380LX151M500J452	1.105	0.442	1.29	1.80	25 x 45
150	380LX151M500J052	0.945	0.585	1.40	1.90	25 x 50
150	380LX151M500K032	1.105	0.442	1.29	1.80	30 x 35
150	380LX151M500K042	0.926	0.562	1.60	2.20	30 x 40
150	380LX151M500A012	1.342	0.805	1.29	1.80	35 x 25
180	380LX181M500J052	0.920	0.368	1.38	1.93	25 x 50
180	380LX181M500K042	0.920	0.368	1.38	1.93	30 x 40
180	380LX181M500A022	1.119	0.617	1.38	1.93	35 x 30
180	380LX181M500A032	1.119	0.617	1.60	2.20	35 x 35
220	380LX221M500K452	0.754	0.339	1.50	2.10	30 x 45
220	380LX221M500K052	0.654	0.397	2.00	2.70	30 x 50
220	380LX221M500A032	0.915	0.549	1.50	2.10	35 x 35
220	380LX221M500A042	0.915	0.549	1.90	2.50	35 x 40
270	380LX271M500A042	0.746	0.447	1.76	2.46	35 x 40
270	380LX271M500A052	0.746	0.447	2.30	3.10	35 x 50
270	382L271M500N042	0.746	0.447	2.40	3.20	40 x 40
330	380LX331M500A452	0.610	0.366	1.99	2.79	35 x 45
330	382LX331M500N042	0.610	0.366	2.16	3.00	40 x 40
390	380LX391M500A052	0.516	0.310	2.22	3.11	35 x 50
390	380LX391M500A062	0.516	0.310	2.70	3.60	35 x 63
390	382L391M500N052	0.516	0.310	2.90	3.90	40 x 50
470	380LX471M500A062	0.428	0.257	2.58	3.61	35 x 63
470	380LX471M500A072	0.428	0.257	3.20	4.20	35 x 70
470	382LX471M500N052	0.428	0.257	2.70	3.78	40 x 50
470	382L471M500N062	0.428	0.257	3.40	4.50	40 x 63
560	380LX561M500A082	0.360	0.216	3.60	4.80	35 x 80
560	382LX561M500N062	0.360	0.216	3.11	4.35	40 x 63
560	382LX561M500B052V	0.360	0.216	3.52	4.05	50 x 50
680	380LX681M500A082	0.296	0.178	3.21	4.49	35 x 80
680	382L681M500N082	0.296	0.178	4.50	6.00	40 x 80
680	382LX681M500B062V	0.296	0.178	4.07	5.70	50 x 63
820	380LX821M500A102	0.246	0.147	3.97	5.56	35 x 105
820	382LX821M500N082	0.246	0.147	3.88	5.43	40 x 80
1000	382LX102M500B082V	0.199	0.121	5.05	7.07	50 x 80
1200	382LX122M500N102	0.168	0.101	5.90	8.26	40 x 105
1200	382LX122M500B092V	0.168	0.101	5.74	8.04	50 x 92
1500	382LX152M500B102V	0.134	0.081	6.65	9.31	50 x 105

Notice and Disclaimer: All product drawings, descriptions, specifications, statements, information and data (collectively, the "Information") in this datasheet or other publication are subject to change. The customer is responsible for checking, confirming and verifying the extent to which the Information contained in this datasheet or other publication is applicable to an order at the time the order is placed. All Information given herein is believed to be accurate and reliable, but it is presented without any guarantee, warranty, representation or responsibility of any kind, expressed or implied. Statements of suitability for certain applications are based on the knowledge that the Cornell Dubilier company providing such statements ("Cornell Dubilier") has of operating conditions that such Cornell Dubilier company regards as typical for such applications, but are not intended to constitute any guarantee, warranty or representation regarding any such matter – and Cornell Dubilier specifically and expressly disclaims any guarantee, warranty or representation concerning the suitability for a specific customer application, use, storage, transportation, or operating environment. The Information is intended for use only by customers who have the requisite experience and capability to determine the correct products for their application. Any technical advice inferred from this Information or otherwise provided by Cornell Dubilier with reference to the use of any Cornell Dubilier products is given gratis (unless otherwise specified by Cornell Dubilier), and Cornell Dubilier assumes no obligation or liability for the advice given or results obtained. Although Cornell Dubilier strives to apply the most stringent quality and safety standards regarding the design and manufacturing of its products, in light of the current state of the art, isolated component failures may still occur. Accordingly, customer applications which require a high degree of reliability or safety should employ suitable designs or other safeguards (such as installation of protective circuitry or redundancies or other appropriate protective measures) in order to ensure that the failure of an electrical component does not result in a risk of personal injury or property damage. Although all product-related warnings, cautions and notes must be observed, the customer should not assume that all safety measures are indicated in such warnings, cautions and notes, or that other safety measures may not be required.

Type 381LL/383LL, 105 °C Long Life, Snap-In Aluminum

8,000 Hour Snap-in

Type 381LL snap-ins are designed and tested to meet the high ripple current demands of inverter DC link applications where long-life of the capacitor bank is essential to system reliability. The 381LL series uses the most advanced electrolyte system that delivers reliable performance and stability of parameters over the life of the capacitor.

Highlights

- 8,000 life at full rated conditions
- Stable capacitance over operating life
- Reduced leakage current over operating life
- Stable ESR and dissipation factor over operating life
- RoHS Compliant

Specifications

Temperature Range	–55°C to + 105 °C
Rated Voltage Range	16 Vdc to 250 Vdc
Capacitance Range	740 µF to 100,000 µF
Capacitance Tolerance	± 20%
Leakage Current	≤3 $\sqrt{CV}$ µA, 4 mA max, 5 minutes
Ripple Current Multipliers	Frequency

	50Hz	60Hz	120Hz	500Hz	1KHz	20KHz
0-6 3 Vdc	0.75	0.85	1	1	1.05	1.05
64-100 Vdc	0.65	0.75	1	1.2	1.2	1.4
101-250 Vdc	0.65	0.73	1	1.1	1.15	1.2

Ambient Temperature

	45	60	70	85	105
0-63 Vdc	1.9	1.7	1.4	1.25	1
64-100 Vdc	1.6	1.5	1.3	1.1	1
100-250 Vdc	1.7	1.5	1.3	1.2	1

Low Temperature Characteristics	Impedance ratio: $Z_{-55°C}/Z_{+25°C}$ ≤8 (16 -50 Vdc) ≤4 (63 - 100 Vdc) ≤ 3 (150–250 Vdc)
Endurance Life Test	5000 h at full load at 105 °C Δ Capactiance ± 12.5% ESR 162.5% of limit DCL 100% of limit
Shelf Life Test	1000 h at 105 °C Δ Capacitance ±20% ESR 200% of limit DCL 100% of limit
Expected Life	8000 h at full load at 105°C Δ Capacitance ± 20% ESR 200% of limit DCL 100% of limit
Vibration	10 to 55 Hz, 0.06" and 10 g max, 2 h each plane
Regulatory Information	

Type 381LL/383LL, 105 °C Long Life, Snap-In Aluminum

8,000 Hour Snap-in
Part Numbering System

381LL/383LL	801	M	016	A03	2	V
Type	Cap	Tolerance	Voltage	Case Code	Insulating Sleeve	V = 5 Pin Standoff
381LL	**801** = 800 µF **832** = 8300 µF **863** = 86,000 µF	**M** = ±20%	**016** = 16 Vdc **063** = 63 Vdc **100** = 100 Vdc		**2** = PET	

Outline Drawings

Dimensions shown are in mm

Two Pins
381LL (25 through 40 mm diameter)

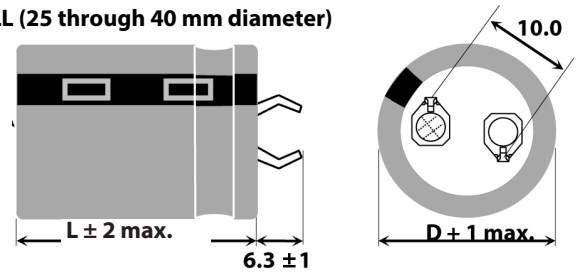

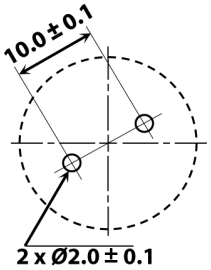

PC Board Mounting Holes

Available in 2, 4 and 5 pins

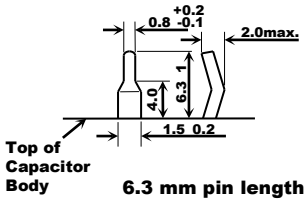

Four Pins
383LL (35, 40 mm diameter)

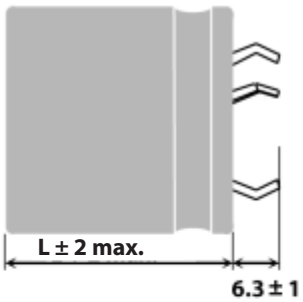

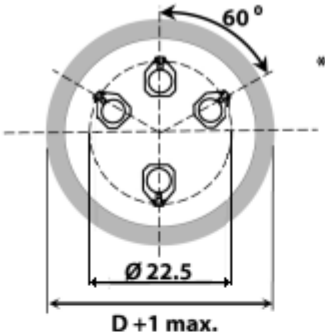

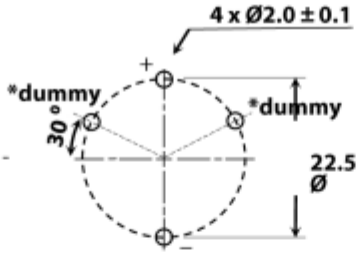

PC Board Mounting Holes

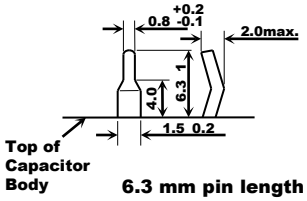

Five Pins
383LL (40 mm diameter)

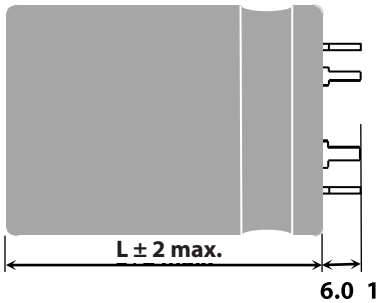

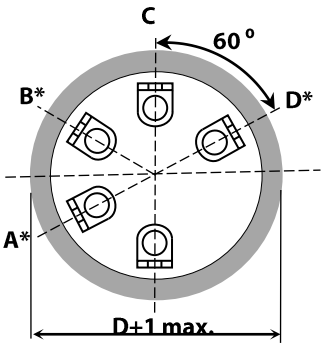

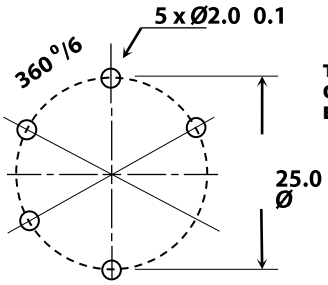

PC Board Mounting Holes

Available in 5 pins

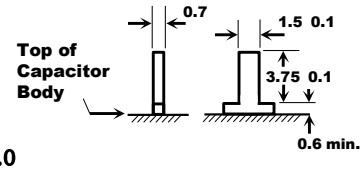

5 pin Standoff pin style (add "V" to end of part#)

Terminal	Connection	
	40 mm Dia.	50 mm Dia.
A	dummy	negative (–)
B	dummy	dummy
C	positive (+)	positive (+)
D	dummy	positive (+)
–	negative (–)	negative (–)

Notes:
* Use dummy terminals for mechanical support only. Make no electrical connection because they resistively connect through the electrolyte to the negative terminal.
** Safety Vent may be on the bottom or on the side of the can.

Type 381LL/383LL, 105 °C Long Life, Snap-In Aluminum

8,000 Hour Snap-in

Ratings

Cap (µF)	Catalog Part Number	Max ESR @ +25°C 120 Hz (ohms)	Max ESR @ +25°C 20 kHz (ohms)	Ripple Amps @105 °C 120 Hz (A)	Ripple Amps @105 °C 20 kHz (A)	Nominal Size D x L (mm)
16 Vdc (20Vdc Surge)						
35000	381LL353M016A032	0.037	0.036	4.81	5.00	35 x 35
59000	381LL593M016A052	0.022	0.021	6.83	7.10	35 x 50
73000	383LL733M016N052	0.021	0.021	7.60	7.91	40 x 50
75000	381LL753M016A062	0.016	0.015	8.42	8.75	35 x 63
100000	383LL104M016N062	0.016	0.015	9.39	9.77	40 x 63
150000	383LL154M016E752	0.013	0.013	11.79	12.26	45 x 75
170000	383LL174M016B062	0.015	0.015	11.22	11.67	50 x 63
200000	383LL204M016B752	0.013	0.012	12.83	13.35	50 x 75
35 Vdc (44 Vdc Surge)						
6800	381LL682M035A032	0.058	0.056	3.84	3.99	35 x 35
13000	381LL133M035A032	0.042	0.041	4.50	4.68	35 x 35
18000	381LL183M035A052	0.027	0.026	6.09	6.34	35 x 50
22000	381LL223M035A052	0.025	0.024	6.39	6.65	35 x 50
28000	383LL283M035N052	0.024	0.023	7.20	7.48	40 x 50
31000	381LL313M035A062	0.018	0.018	7.90	8.21	35 x 63
35000	383LL353M035E052	0.023	0.023	7.99	8.31	45 x 50
38000	383LL383M035N062	0.018	0.017	8.89	9.25	40 x 63
58000	383LL583M035E752	0.014	0.014	11.28	11.73	45 x 75
66000	383LL663M035B062	0.016	0.016	10.85	11.29	50 x 63
79000	383LL793M035B752	0.014	0.013	12.41	12.91	50 x 75
50 Vdc (63 Vdc Surge)						
6800	381LL682M050A032	0.047	0.046	3.91	4.07	35 x 35
8400	381LL842M050A032	0.041	0.040	4.18	4.35	35 x 35
14000	381LL143M050A052	0.025	0.024	5.94	6.18	35 x 50
17000	383LL173M050N052	0.023	0.022	6.77	7.04	40 x 50
18000	381LL183M050A062	0.018	0.018	7.28	7.58	35 x 63
19000	381LL193M050A062	0.018	0.017	7.34	7.64	35 x 63
22000	383LL223M050E052	0.022	0.021	7.61	7.91	45 x 50
24000	383LL243M050N062	0.017	0.016	8.37	8.70	40 x 63
36000	383LL363M050E752	0.013	0.013	10.72	11.15	45 x 75
41000	383LL413M050B062	0.015	0.015	10.44	10.85	50 x 63
49000	383LL493M050B752	0.013	0.012	11.94	12.41	50 x 75
63 Vdc (79 Vdc Surge)						
4700	381LL472M063A032	0.086	0.083	2.91	3.03	35 x 35
6400	381LL642M063A032	0.080	0.078	3.02	3.14	35 x 35
6800	381LL682M063A052	0.050	0.048	4.18	4.35	35 x 50
10000	381LL103M063A052	0.047	0.046	4.28	4.45	35 x 50
13000	383LL133M063N052	0.044	0.043	4.89	5.08	40 x 50
14000	381LL143M063A062	0.035	0.034	5.29	5.50	35 x 63
16000	383LL163M063E052	0.042	0.041	5.49	5.71	45 x 50
18000	383LL183M063N062	0.033	0.032	6.04	6.28	40 x 63
27000	383LL273M063E752	0.026	0.026	7.75	8.06	45 x 75
31000	383LL313M063B062	0.029	0.028	7.56	7.87	50 x 63
37000	383LL373M063B752	0.024	0.023	8.65	9	50 x 75

Cap (µF)	Catalog Part Number	Max ESR @ +25°C 120 Hz (ohms)	Max ESR @ +25°C 20 kHz (ohms)	Ripple Amps @105 °C 120 Hz (A)	Ripple Amps @105 °C 20 kHz (A)	Nominal Size D x L (mm)
80 Vdc (100 Vdc Surge)						
4000	381LL402M080A032	0.084	0.042	3.60	5.04	35 x 35
4700	381LL472M080A052	0.056	0.028	4.80	6.72	35 x 50
6800	381LL682M080A052	0.050	0.025	5.11	7.16	35 x 50
6800	381LL682M080A062	0.040	0.020	6.00	8.39	35 x 63
8400	383LL842M080N052	0.046	0.023	5.86	8.20	40 x 50
9200	381LL922M080A062	0.036	0.018	6.32	8.85	35 x 63
10000	383LL103M080E052	0.044	0.022	6.6	9.24	45 x 50
11000	383LL113M080N062	0.034	0.017	7.24	10.13	40 x 63
18000	383LL183M080E752	0.026	0.013	9.37	13.11	45 x 75
19000	383LL193M080B062	0.03	0.015	9.14	12.79	50 x 63
23000	383LL233M080B752	0.025	0.012	10.45	14.63	50 x 75
100 Vdc (125 Vdc Surge)						
2400	381LL242M100A032	0.091	0.046	3.46	4.84	35 x 35
3300	381LL332M100A052	0.059	0.029	4.70	6.58	35 x 50
4100	381LL412M100A052	0.054	0.027	4.91	6.87	35 x 50
4700	381LL472M100A062	0.042	0.021	5.86	8.21	35 x 63
5100	383LL512M100N052	0.050	0.025	5.65	7.91	40 x 50
5600	381LL562M100A062	0.039	0.020	6.07	8.49	35 x 63
6400	383LL642M100E052	0.046	0.023	6.41	8.97	45 x 50
6800	383LL682M100N062	0.037	0.018	6.96	9.74	40 x 63
7000	383LL702M100N062	0.037	0.018	6.99	9.78	40 x 63
10000	383LL103M100E752	0.028	0.014	9.05	12.67	45 x 75
12000	383LL123M100B062	0.031	0.016	8.92	12.49	50 x 63
14000	383LL142M100B752	0.026	0.013	10.2	14.29	50 x 75
200 Vdc (250 Vdc Surge)						
950	381LL951M200A032	0.183	0.092	2.30	3.22	35 x 35
1600	381LL162M200A052	0.108	0.054	3.38	4.74	35 x 50
2000	383LL202M200N052	0.101	0.051	3.87	5.42	40 x 50
2200	381LL222M200A062	0.079	0.040	4.19	5.86	35 x 63
2500	383LL252M200E052	0.095	0.048	4.36	6.11	45 x 50
2700	383LL272M200N062	0.074	0.037	4.78	6.70	40 x 63
4100	383LL412M200E752	0.058	0.029	6.16	8.63	45 x 75
4600	383LL462M200B062	0.065	0.033	6.03	8.44	50 x 63
5600	383LL562M200B752	0.054	0.027	6.9	9.66	50 x 75
250 Vdc (300 Vdc Surge)						
740	381LL741M250A032	0.200	0.100	2.28	3.19	35 x 35
1200	381LL122M250A052	0.118	0.059	3.24	4.54	35 x 50
1500	383LL152M250N052	0.109	0.055	3.73	5.22	40 x 50
1700	381LL172M250A062	0.087	0.043	4.00	5.60	35 x 63
1900	383LL192M250E052	0.102	0.051	4.23	5.92	45 x 50
2100	383LL212M250N062	0.080	0.040	4.61	6.45	40 x 63
3200	383LL322M250E752	0.062	0.031	5.97	8.36	45 x 75
3600	383LL362M250B062	0.069	0.034	5.88	8.23	50 x 63
4300	383LL432M250B752	0.057	0.029	6.73	9.42	50 x 75

Typical Performance Curves

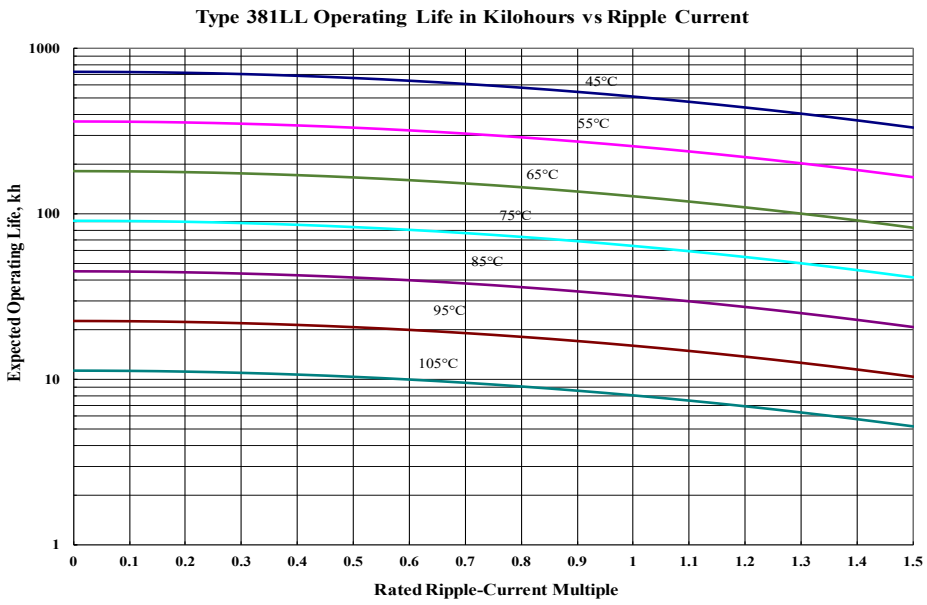

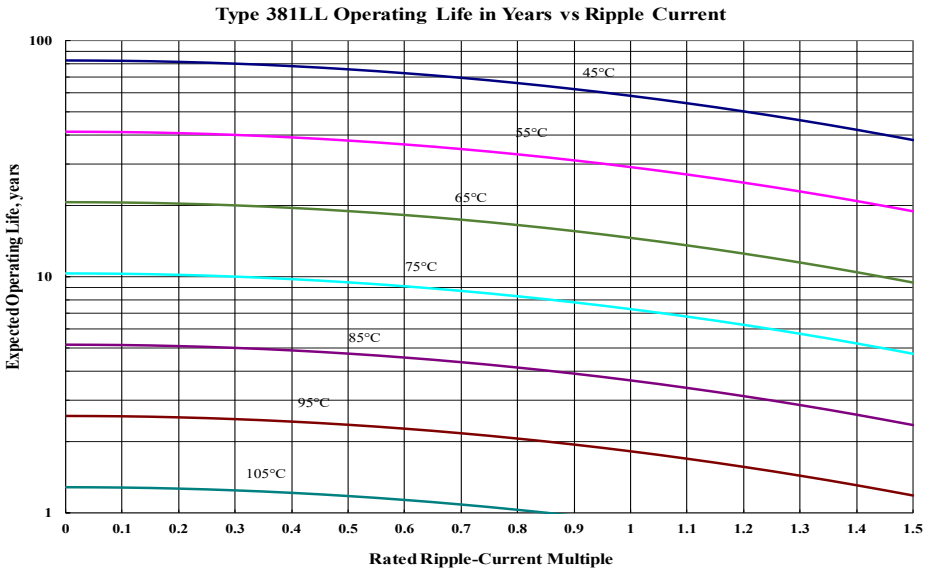

Type 381LL/383LL, 105 °C Long Life, Snap-In Aluminum

8,000 Hour Snap-in

Typical Performance Curves

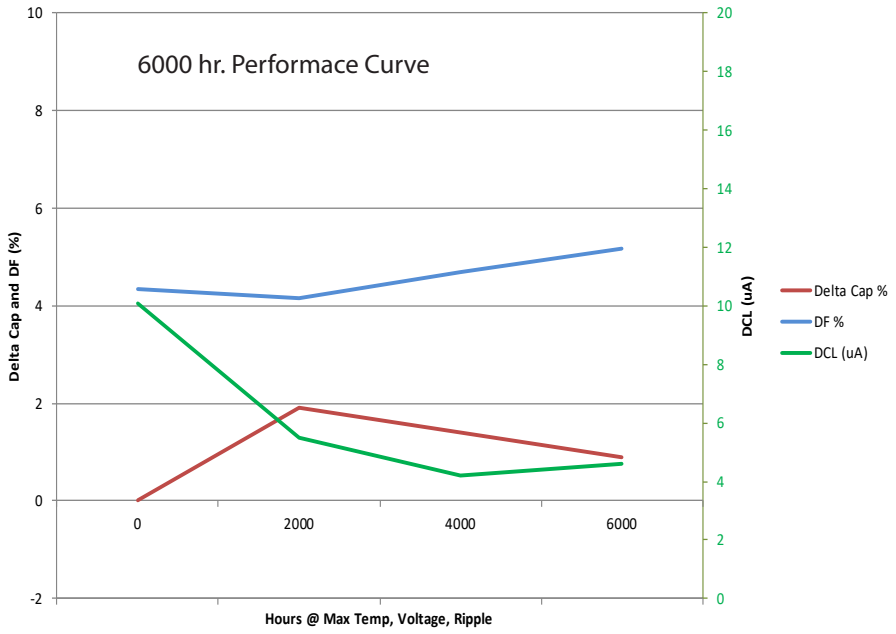

Based on 330uF 250Vdc Endurance Life Test

Notice and Disclaimer: All product drawings, descriptions, specifications, statements, information and data (collectively, the "Information") in this datasheet or other publication are subject to change. The customer is responsible for checking, confirming and verifying the extent to which the Information contained in this datasheet or other publication is applicable to an order at the time the order is placed. All Information given herein is believed to be accurate and reliable, but it is presented without any guarantee, warranty, representation or responsibility of any kind, expressed or implied. Statements of suitability for certain applications are based on the knowledge that the Cornell Dubilier company providing such statements ("Cornell Dubilier") has of operating conditions that such Cornell Dubilier company regards as typical for such applications, but are not intended to constitute any guarantee, warranty or representation regarding any such matter – and Cornell Dubilier specifically and expressly disclaims any guarantee, warranty or representation concerning the suitability for a specific customer application, use, storage, transportation, or operating environment. The Information is intended for use only by customers who have the requisite experience and capability to determine the correct products for their application. Any technical advice inferred from this Information or otherwise provided by Cornell Dubilier with reference to the use of any Cornell Dubilier products is given gratis (unless otherwise specified by Cornell Dubilier), and Cornell Dubilier assumes no obligation or liability for the advice given or results obtained. Although Cornell Dubilier strives to apply the most stringent quality and safety standards regarding the design and manufacturing of its products, in light of the current state of the art, isolated component failures may still occur. Accordingly, customer applications which require a high degree of reliability or safety should employ suitable designs or other safeguards (such as installation of protective circuitry or redundancies or other appropriate protective measures) in order to ensure that the failure of an electrical component does not result in a risk of personal injury or property damage. Although all product-related warnings, cautions and notes must be observed, the customer should not assume that all safety measures are indicated in such warnings, cautions and notes, or that other safety measures may not be required.

Type 381LX / 383LX 105 °C High Ripple, Snap-In Aluminum

High Ripple, Long Life, 2, 4 and 5 pin styles available

Adding longer-life and more ripple capability to the excellent value of Type 380L/LX capacitors, the 381L/LX readily handles tough switching power supply input and output circuits and motor-drive bus capacitor applications where the high surface area of multiple units in parallel equals the ripple capability of our Type 520C inverter-grade capacitor. Type 381LX delivers more capacitance per can size while Type 381L gives lower ESR for the same capacitance rating. Type 383L/LX has 4 or 5 leads for stable, reverse-proof mounting.

Highlights

- Top performance in power supplies and motor drives
- 4 times the life of Type 380L/LX
- 2, 4 and 5 leads available
- Big selection of 42 case sizes

Specifications

Temperature Range	–40 °C to + 105 °C ≤ 250 Vdc –25 °C to + 105 °C ≥ 315 Vdc
Rated Voltage Range	10 Vdc to 450 Vdc
Capacitance Range	33 µF to 150,000 µF
Capacitance Tolerance	± 20%
Leakage Current	≤3 $\sqrt{CV}$ µA, 4 mA max, 5 minutes
Ripple Current Multipliers	Ambient Temperature

	45 °C	60 °C	70 °C	85 °C	105°C
381L 383L	2.70	2.60	2.50	2.10	1.00
381LX, 383 LX	2.35	2.20	2.00	1.70	1.00

Frequency

	50 Hz	60 Hz	120 Hz	500 Hz	1 kHz	5 kHz & up
10-100 Vdc	0.93	0.95	1.00	1.05	1.08	1.15
160-450 Vdc	0.75	0.80	1.00	1.20	1.25	1.40

Low Temperature Characteristics	Impedance ratio: $Z_{-20°C}/Z_{+25°C}$ ≤ 10 (10 Vdc) ≤ 8 (16–50 Vdc) ≤ 4 (63–100 Vdc) ≤ 3 (150–450 Vdc)
Endurance Life Test	3000 h at full load at 105 °C Δ Capacitance ±20% ESR 200% of limit DCL 100% of limit
Shelf Life Test	1000 h at 105 °C Δ Capacitance ±20% ESR 200% of limit DCL 100% of limit
Vibration	10 to 55 Hz, 0.06" and 10 g max, 2 h each plane
RoHS Compliant	

Type 381LX / 383LX 105 °C High Ripple, Snap-In Aluminum

High Ripple, Long Life, 2,4 and 5 pin styles available

383LX	272	M	200	N08	2	V
Type	Cap	Tolerance	Voltage	Case Code	Insulation	# of pins
381L / LX (2 pins)	**100** = 10 µF	**M =** ±20%	**200** = 200 Vdc		**2** = PVC	**Blank** = 2 pins / 4 pins snap-in 6.3mm L
383L / LX (4 or 5 pins)	**101** = 100 µF					**A** = 2 pins snap-in 4.0mm L
	272 = 2700 µF					**VS** = 5 pins snap-in 6.3mm L
						V = 5 pins standoff

Outline Drawings

Dimensions shown are in mm

Two Pins
381L/LX (22 through 40 mm diameter)

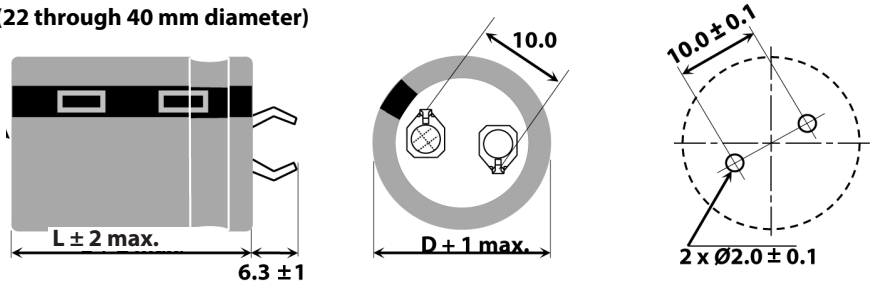

PC Board Mounting Holes

Available in 2, 4 and 5 pins

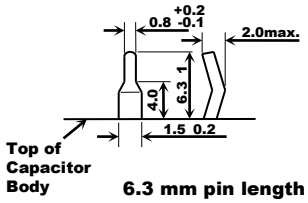

6.3 mm pin length

Four Pins
383L/LX (35 and 40 mm diameter)

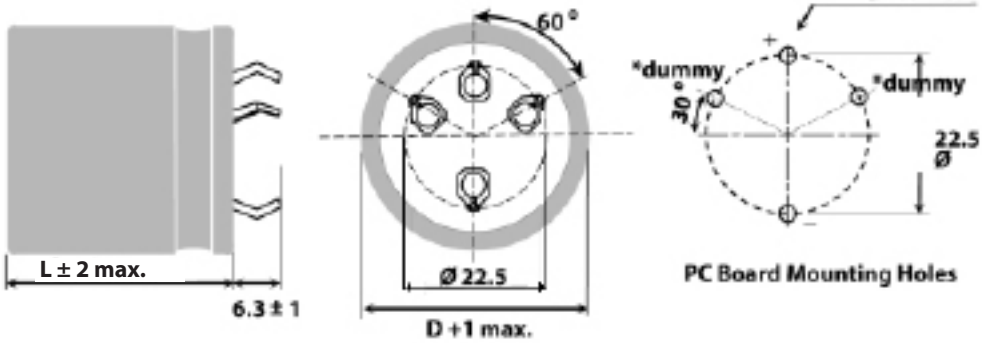

Available in 2 and 4 pins

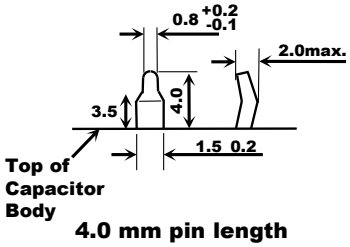

4.0 mm pin length option (add "A" to end of part#)

Five Pins
383L/LX (40 and 50 mm diameter)

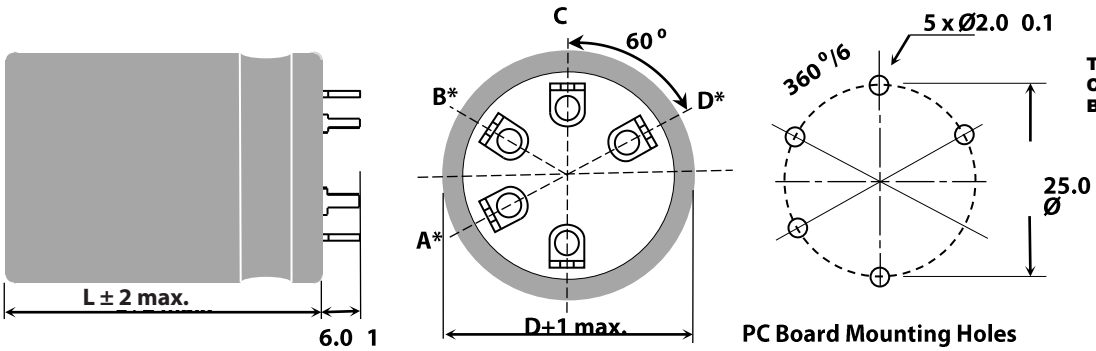

PC Board Mounting Holes

Available in 5 pins

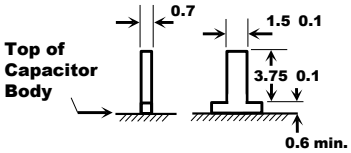

5 pin Standoff pin style (add "V" to end of part#)

Terminal	Connection	
	40 mm Dia.	50 mm Dia.
A	dummy	negative (–)
B	dummy	dummy
C	positive (+)	positive (+)
D	dummy	positive (+)
–	negative (–)	negative (–)

Notes:
* Use dummy terminals for mechanical support only. Make no electrical connection because they resistively connect through the electrolyte to the negative terminal.
** Safety Vent may be on the bottom or on the side of the can.

Type 381LX / 383LX 105 °C High Ripple, Snap-In Aluminum

High Ripple, Long Life, 2,4 and 5 pin styles available

Insulated Case Dimensions

Case Code	DIAMETER "D"		LENGTH "L"		Typical Weight
	mm	inches	mm	inches	(grams)
H20	22	0.87	20	0.79	14
H01	22	0.87	25	0.98	16
H02	22	0.87	30	1.18	19
H03	22	0.87	35	1.38	22
H04	22	0.87	40	1.57	24
H45	22	0.87	45	1.77	28
H05	22	0.87	50	1.97	31
J20	25	0.98	20	0.79	16
J01	25	0.98	25	0.98	20
J02	25	0.98	30	1.18	24
J03	25	0.98	35	1.38	27
J04	25	0.98	40	1.57	31
J45	25	0.98	45	1.77	35
J05	25	0.98	50	1.97	38
K20	30	1.18	20	0.79	25
K01	30	1.18	25	0.98	30
K02	30	1.18	30	1.18	35
K03	30	1.18	35	1.38	40
K04	30	1.18	40	1.57	44
K45	30	1.18	45	1.77	48
K05	30	1.18	50	1.97	53
A20	35	1.38	20	0.79	35
A01	35	1.38	25	0.98	42
A02	35	1.38	30	1.18	48
A03	35	1.38	35	1.38	54

Case Code	DIAMETER "D"		LENGTH "L"		Typical Weight
	mm	inches	mm	inches	(grams)
A04	35	1.38	40	1.57	62
A45	35	1.38	45	1.77	67
A05	35	1.38	50	1.97	74
A55	35	1.38	55	2.17	80
A06	35	1.38	63	2.48	88
A07	35	1.38	70	2.76	98
A08	35	1.38	80	3.15	112
A10	35	1.38	105	4.13	144
N04	40	1.57	40	1.57	82
N05	40	1.57	50	1.97	105
N06	40	1.57	63	2.48	130
N08	40	1.57	80	3.15	185
N10	40	1.57	105	4.13	265
E05	45	1.77	50	1.97	122
E06	45	1.77	63	2.48	150
E75	45	1.77	75	2.65	200
E08	45	1.77	80	3.15	213
E09	45	1.77	92	3.62	238
E10	45	1.77	105	4.13	299
B05	50	1.97	50	1.97	136
B06	50	1.97	63	2.48	168
B08	50	1.97	80	3.15	239
B09	50	1.97	92	3.62	241
B10	50	1.97	105	4.13	325

Typical Performance Curves

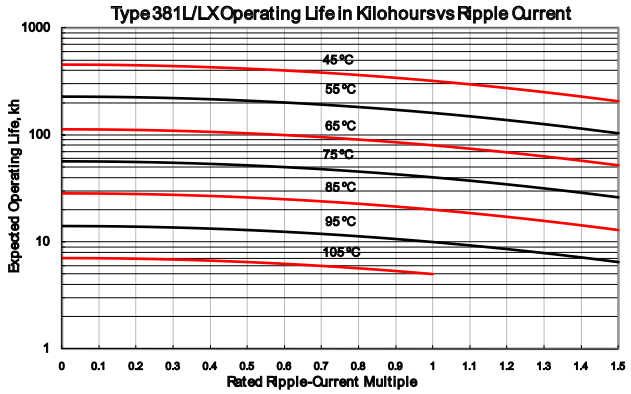

Life Test Data 220 µF/250V Capacitance, DF, Leakage Current

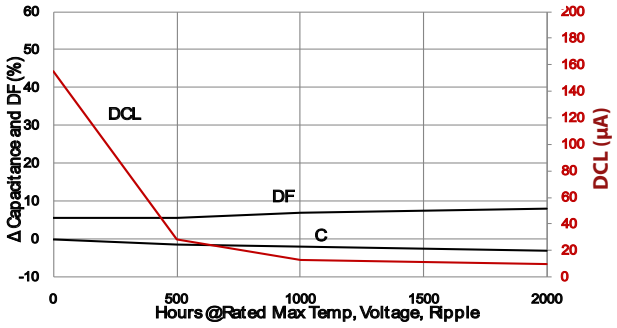

Life Test Data 68 µF/450V Capacitance, DF, Leakage Current

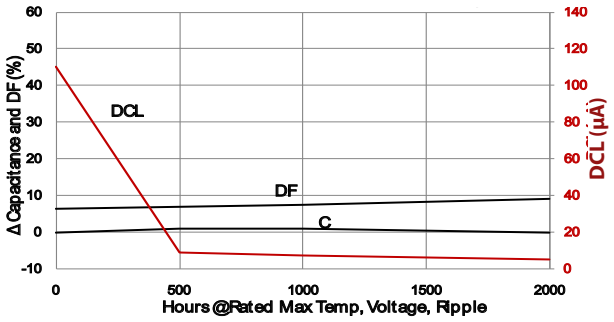

Type 381LX / 383LX 105 °C High Ripple, Snap-In Aluminum

High Ripple, Long Life, 2,4 and 5 pin styles available

Ratings

Cap. (µF)	Catalog Part Number	Max. ESR @ +25°C		Ripple Amps @ +105°C		Nominal Size
		120 Hz (ohms)	20 kHz (ohms)	120 Hz (A)	20 kHz (A)	D x L (mm)
10 Vdc (13 Vdc Surge)						
4700	381LX472M010H012	0.159	0.135	0.85	0.98	22 x 25
6800	381LX682M010H012	0.111	0.093	1.30	1.50	22 x 25
10000	381LX103M010H012	0.075	0.063	1.80	2.10	22 x 25
12000	381LX123M010H012	0.076	0.065	2.20	2.63	22 x 25
15000	381LX153M010H012	0.076	0.065	2.20	2.53	22 x 25
18000	381LX183M010H022	0.051	0.043	2.40	2.76	22 x 30
22000	381LX223M010H032	0.041	0.035	2.60	2.99	22 x 35
27000	381LX273M010J032	0.034	0.029	3.10	3.57	25 x 35
33000	381LX333M010J042	0.028	0.023	3.40	3.91	25 x 40
39000	381LX393M010K032	0.026	0.023	3.70	4.26	30 x 35
39000	381LX393M010A022	0.025	0.020	3.70	4.30	35 x 30
47000	381LX473M010K032	0.024	0.022	4.20	4.83	30 x 35
56000	381LX563M010K042	0.023	0.021	5.00	5.75	30 x 40
68000	381LX683M010K452	0.022	0.019	5.40	6.21	30 x 45
68000	383LX683M010N042	0.023	0.022	5.40	6.20	40 x 40
82000	383LX823M010N052	0.018	0.017	7.40	8.50	40 x 50
120000	383L124M010N062	0.012	0.008	7.10	8.60	40 x 63
150000	383L154M010N082	0.009	0.006	8.90	10.60	40 x 80
16 Vdc (20 Vdc Surge)						
3300	381LX332M016H012	0.213	0.170	1.30	1.50	22 x 25
4700	381LX472M016H012	0.150	0.120	1.60	1.80	22 x 25
6800	381LX682M016H012	0.090	0.067	2.20	2.50	22 x 25
6800	381LX682M016J202	0.110	0.092	1.80	2.10	25 x 20
8200	381LX822M016H012	0.110	0.092	1.80	2.10	22 x 25
10000	381LX103M016H012	0.075	0.063	2.60	2.99	22 x 25
10000	381LX103M016J012	0.120	0.086	2.60	3.00	25 x 25
12000	381LX123M016H022	0.062	0.053	2.90	3.34	22 x 30
15000	381LX153M016J022	0.046	0.307	3.20	3.70	25 x 30
15000	381LX153M016J032	0.080	0.064	3.20	3.70	25 x 35
15000	381LX153M016K022	0.080	0.064	3.20	3.70	30 x 30
18000	381LX183M016H032	0.041	0.035	3.50	4.03	22 x 35
22000	381LX223M016H042	0.034	0.029	3.80	4.37	22 x 40
22000	381LX223M016J452	0.033	0.028	3.80	4.40	25 x 45
27000	381LX273M016H052	0.028	0.023	4.20	4.83	22 x 50
27000	381LX273M016J052	0.030	0.025	4.20	4.80	25 x 50
27000	381LX273M016K022	0.028	0.023	4.20	4.83	30 x 30
33000	381LX333M016K032	0.023	0.020	4.70	5.41	30 x 35
33000	381LX333M016K452	0.023	0.020	4.70	5.40	30 x 45
39000	381LX393M016K042	0.022	0.020	5.10	5.87	30 x 40
47000	381LX473M016K452	0.021	0.019	5.50	6.33	30 x 45
47000	381LX473M016A452	0.020	0.018	5.50	6.30	35 x 45

Cap. (µF)	Catalog Part Number	Max. ESR @ +25°C		Ripple Amps @ +105°C		Nominal Size
		120 Hz (ohms)	20 kHz (ohms)	120 Hz (A)	20 kHz (A)	D x L (mm)
16 Vdc (20 Vdc Surge)						
47000	383LX473M016N042	0.020	0.018	5.50	6.33	40 x 40
56000	381LX563M016A452	0.020	0.018	6.00	6.90	35 x 45
68000	381LX683M016A452	0.020	0.018	6.50	7.50	35 x 45
68000	383LX683M016N052	0.015	0.014	7.30	8.40	40 x 50
82000	383LX823M016N062	0.017	0.013	7.70	8.80	40 x 63
100000	381LX104M016A082	0.015	0.013	8.00	9.20	35 x 80
120000	381LX124M016A082	0.015	0.013	8.50	9.50	35 x 80
120000	383LX124M016N082	0.014	0.012	8.80	10.10	40 x 80
120000	383LX124M016B052V	0.015	0.014	9.02	10.37	50 x 50
150000	383LX154M016N102	0.013	0.012	9.88	11.36	40 x 105
150000	383LX154M016B062V	0.014	0.013	10.15	11.67	50 x 63
180000	383LX184M016B082V	0.013	0.012	11.02	12.67	50 x 80
220000	383LX224M016B092V	0.012	0.011	11.71	13.47	50 x 92
250000	383LX254M016B102V	0.011	0.010	12.31	14.16	50 x 105
25 Vdc (32 Vdc Surge)						
2200	381LX222M025H202	0.240	0.180	1.30	1.50	22 x 20
3300	381LX332M025H012	0.160	0.120	1.60	1.80	22 x 25
4700	381LX472M025H012	0.105	0.080	2.00	2.30	22 x 25
5600	381LX562M025H012	0.090	0.070	2.20	2.50	22 x 25
6800	381LX682M025H022	0.085	0.064	2.40	2.76	22 x 30
6800	381LX682M025J012	0.070	0.055	2.40	2.80	25 x 25
8200	381LX822M025H022	0.071	0.053	2.70	3.11	22 x 30
10000	381LX103M025J022	0.058	0.044	3.00	3.45	25 x 30
12000	381LX123M025J022	0.048	0.036	3.20	3.68	25 x 30
12000	381LX123M025A012	0.044	0.033	3.20	3.70	35 x 25
15000	381LX153M025J032	0.039	0.029	3.60	4.14	25 x 35
15000	381LX153M025J452	0.036	0.031	3.60	4.10	25 x 45
15000	381LX153M025A022	0.036	0.031	3.60	4.10	35 x 30
18000	381LX183M025J042	0.032	0.024	3.90	4.49	25 x 40
18000	381LX183M025J052	0.030	0.027	3.90	4.50	25 x 50
22000	381LX223M025J452	0.026	0.020	4.30	4.95	25 x 45
22000	381LX223M025K452	0.025	0.022	4.30	4.90	30 x 45
22000	381LX223M025A032	0.030	0.026	4.30	4.90	35 x 35
27000	381LX273M025K042	0.021	0.019	4.80	5.50	30 x 40
27000	383L273M025N042	0.020	0.013	4.60	5.60	40 x 40
33000	381LX333M025K452	0.018	0.014	5.50	6.33	30 x 45
33000	383LX333M025N042	0.018	0.016	5.50	6.33	40 x 40
39000	383L393M025N052	0.015	0.010	5.80	7.00	40 x 50
47000	381LX473M025A052	0.017	0.015	6.50	4.25	35 x 50
47000	383LX473M025N052	0.015	0.014	6.50	7.40	40 x 50
47000	383L473M025N062	0.012	0.008	6.90	8.30	40 x 63
56000	383LX563M025N062	0.015	0.012	7.20	8.25	40 x 63

Type 381LX / 383LX 105 °C High Ripple, Snap-In Aluminum

High Ripple, Long Life, 2,4 and 5 pin styles available

Cap. (µF)	Catalog Part Number	Max. ESR @ +25°C		Ripple Amps @ +105°C		Nominal Size
		120 Hz (ohms)	20 kHz (ohms)	120 Hz (A)	20 kHz (A)	D x L (mm)
25 Vdc (32 Vdc Surge)						
68000	383L683M025N082	0.009	0.007	8.70	10.20	40 x 80
82000	383LX823M025N082	0.014	0.011	8.70	10.00	40 x 80
82000	383LX823M025B052V	0.016	0.015	9.20	10.58	50 x 50
100000	383LX104M025N102	0.012	0.010	9.76	11.22	40 x 105
100000	383LX104M025B062V	0.015	0.013	10.02	11.52	50 x 63
120000	383LX124M025B082V	0.013	0.012	10.93	12.57	50 x 80
150000	383LX154M025B092V	0.012	0.011	11.70	13.46	50 x 92
180000	383LX184M025B102V	0.010	0.009	12.42	14.28	50 x 105
35 Vdc (44 Vdc Surge)						
1500	381LX152M035H012	0.287	0.216	1.10	1.30	22 x 25
2200	381LX222M035H012	0.200	0.150	1.40	1.60	22 x 25
3300	381LX332M035H012	0.121	0.091	1.90	2.20	22 x 25
3300	381LX332M035K202	0.130	0.100	1.70	2.00	30 x 20
3900	381LX392M035H012	0.110	0.080	2.00	2.30	22 x 25
4700	381LX472M035H022	0.090	0.070	2.20	2.50	22 x 30
4700	381LX472M035J012	0.090	0.070	2.20	2.50	25 x 25
5600	381LX562M035H032	0.071	0.054	2.40	2.80	22 x 35
5600	381LX562M035J012	0.041	0.054	2.40	2.80	25 x 25
6800	381LX682M035J022	0.073	0.055	2.60	2.99	25 x 30
6800	381LX682M035K022	0.059	0.045	2.60	3.00	30 x 30
8200	381LX822M035J022	0.049	0.037	2.90	3.30	25 x 30
8200	381LX822M035A012	0.049	0.037	2.90	3.30	35 x 25
10000	381LX103M035J032	0.050	0.037	3.20	3.68	25 x 35
10000	381LX103M035J452	0.040	0.030	3.20	3.70	25 x 45
10000	381LX103M035A022	0.040	0.030	3.20	3.70	35 x 30
12000	381LX123M035J042	0.041	0.031	3.50	4.03	25 x 40
12000	381LX123M035J052	0.033	0.025	3.50	4.00	25 x 50
12000	381LX123M035A022	0.033	0.025	3.50	4.00	35 x 30
15000	381LX153M035K042	0.033	0.025	3.90	4.49	30 x 40
15000	381LX153M035K452	0.030	0.020	3.90	4.50	30 x 45
15000	381LX153M035A032	0.030	0.020	3.90	4.50	35 x 35
18000	381LX183M035K452	0.028	0.021	4.30	4.95	30 x 45
22000	381LX223M035A052	0.023	0.017	5.00	5.80	35 x 50
22000	383LX223M035N042	0.023	0.017	5.00	5.75	40 x 40
27000	381LX273M035A052	0.018	0.014	5.30	6.10	35 x 50
27000	383LX273M035N052	0.020	0.015	5.45	6.25	40 x 50
33000	383L333M035N062	0.019	0.014	6.60	7.60	40 x 63
39000	381LX393M035A052	0.017	0.014	6.50	7.50	35 x 50
47000	383L473M035N082	0.018	0.013	7.80	9.00	40 x 80
47000	383LX473M035B052V	0.021	0.016	8.25	9.49	50 x 50
56000	383LX563M035B062V	0.019	0.014	9.07	10.43	50 x 63
68000	383LX683M035N102	0.016	0.012	9.27	10.66	40 x 105

Cap. (µF)	Catalog Part Number	Max. ESR @ +25°C		Ripple Amps @ +105°C		Nominal Size
		120 Hz (ohms)	20 kHz (ohms)	120 Hz (A)	20 kHz (A)	D x L (mm)
35 Vdc (44 Vdc Surge)						
68000	383LX683M035B082V	0.017	0.013	10.07	11.58	50 x 80
82000	383LX823M035B092V	0.015	0.011	10.89	12.52	50 x 92
100000	383LX104M035B102V	0.013	0.010	11.75	13.51	50 x 105
50 Vdc (63 Vdc Surge)						
1000	381LX102M050H202	0.260	0.200	0.90	1.00	22 x 20
1500	381LX152M050H012	0.155	0.120	1.25	1.45	22 x 25
1800	381LX182M050H012	0.129	0.097	1.50	1.70	22 x 25
2200	381LX222M050H012	0.129	0.097	1.50	1.70	22 x 25
2700	381LX272M050H012	0.154	0.115	1.80	2.07	22 x 25
2700	381LX272M050J012	0.086	0.064	1.80	2.10	25 x 25
3300	381LX332M050H012	0.126	0.094	2.00	2.30	22 x 25
3300	381LX332M050J022	0.070	0.053	2.00	2.30	25 x 30
3900	381LX392M050J012	0.106	0.080	2.20	2.53	25 x 25
3900	381LX392M050K012	0.065	0.050	2.20	2.50	30 x 25
4700	381LX472M050J022	0.053	0.040	2.50	2.90	25 x 30
4700	381LX472M050A012	0.053	0.040	2.50	2.90	35 x 25
5600	381LX562M050J032	0.074	0.056	2.80	3.22	25 x 35
5600	381LX562M050A022	0.050	0.038	2.80	3.20	35 x 30
6800	381LX682M050H452	0.061	0.046	3.30	3.80	22 x 45
6800	381LX682M050A022	0.046	0.035	3.30	3.80	35 x 30
8200	381LX822M050K452	0.051	0.038	3.60	4.10	30 x 45
8200	381LX822M050A032	0.040	0.030	3.60	4.10	35 x 35
10000	381LX103M050J052	0.041	0.031	4.00	4.60	25 x 50
10000	381LX103M050K052	0.033	0.025	4.00	4.60	30 x 50
10000	381LX103M050A042	0.033	0.025	4.00	4.60	35 x 40
12000	381LX123M050A452	0.028	0.021	4.50	5.20	35 x 45
12000	383L123M050N042	0.029	0.018	3.80	4.80	40 x 40
15000	381LX153M050K452	0.028	0.022	4.80	5.52	30 x 45
15000	383LX153M050N042	0.022	0.018	4.80	5.52	40 x 40
15000	383L153M050N052	0.021	0.013	4.90	6.10	40 x 50
18000	381LX183M050A452	0.023	0.018	5.60	6.44	35 x 45
18000	383L183M050N062	0.017	0.011	5.80	7.20	40 x 63
22000	383LX223M050N052	0.016	0.013	5.10	5.90	40 x 50
27000	383LX273M050N062	0.015	0.012	6.05	6.96	40 x 63
27000	383L273M050N082	0.013	0.009	7.40	9.00	40 x 80
33000	383LX333M050B052V	0.018	0.014	7.75	8.91	50 x 50
39000	383LX393M050N082	0.013	0.010	6.20	7.10	40 x 80
39000	383LX393M050B062V	0.016	0.013	8.40	9.66	50 x 63
47000	383LX473M050N102	0.012	0.010	8.18	9.41	40 x 105
47000	383LX473M050B082V	0.014	0.011	9.19	10.57	50 x 80
56000	383LX563M050B092V	0.012	0.009	9.79	11.26	50 x 92
68000	383LX683M050B102V	0.011	0.009	10.40	12.00	50 x 105

Type 381LX / 383LX 105 °C High Ripple, Snap-In Aluminum

High Ripple, Long Life, 2,4 and 5 pin styles available

Cap. (µF)	Catalog Part Number	Max. ESR @ +25°C 120 Hz (ohms)	Max. ESR @ +25°C 20 kHz (ohms)	Ripple Amps @ +105°C 120 Hz (A)	Ripple Amps @ +105°C 20 kHz (A)	Nominal Size D x L (mm)
63 Vdc (79 Vdc Surge)						
680	381LX681M063H012	0.410	0.310	0.90	1.00	22 x 25
1000	381LX102M063H012	0.280	0.210	1.18	1.35	22 x 25
1200	381LX122M063H012	0.235	0.180	1.40	1.60	22 x 25
1500	381LX152M063H012	0.235	0.180	1.50	1.70	22 x 25
1800	381LX182M063H022	0.157	0.117	1.70	1.96	22 x 30
1800	381LX182M063J012	0.123	0.092	2.20	2.53	25 x 25
2200	381LX222M063H022	0.143	0.110	1.50	1.70	22 x 30
2700	381LX272M063H042	0.123	0.092	2.20	2.53	22 x 40
2700	381LX272M063K012	0.105	0.080	2.20	2.50	30 x 25
3300	381LX332M063J022	0.090	0.070	2.50	2.90	25 x 30
3300	381LX332M063A012	0.090	0.070	2.50	2.90	35 x 25
3900	381LX392M063J022	0.085	0.064	2.70	3.11	25 x 30
3900	381LX392M063J452	0.080	0.060	2.70	3.10	25 x 45
4700	381LX472M063K042	0.063	0.048	3.00	3.50	30 x 40
5600	381LX562M063K042	0.059	0.044	3.30	3.80	30 x 40
5600	381LX562M063K452	0.055	0.040	3.30	3.80	30 x 45
5600	381LX562M063A032	0.055	0.040	3.30	3.80	35 x 35
6800	381LX682M063J052	0.050	0.040	3.60	4.10	25 x 50
6800	381LX682M063K042	0.049	0.037	3.60	4.14	30 x 40
6800	381LX682M063K052	0.050	0.040	3.60	4.10	30 x 50
8200	381LX822M063J052	0.040	0.030	3.90	4.50	25 x 50
8200	381LX822M063A452	0.040	0.030	3.90	4.50	35 x 45
8200	383L822M063N042	0.031	0.018	3.70	4.80	40 x 40
10000	381LX103M063K452	0.033	0.028	4.40	5.10	30 x 45
10000	381LX103M063K052	0.033	0.028	4.40	5.10	30 x 50
12000	381LX123M063K052	0.030	0.025	4.40	5.06	30 x 50
12000	383LX123M063N042	0.030	0.028	4.52	5.20	40 x 40
12000	383L123M063N052	0.022	0.013	4.70	6.10	40 x 50
15000	381LX153M063A052	0.024	0.023	4.90	5.70	35 x 50
15000	383LX153M063N052	0.027	0.023	4.80	5.50	40 x 50
15000	383L153M063N062	0.018	0.011	5.70	7.20	40 x 63
18000	381LX183M063A082	0.022	0.019	5.80	6.70	35 x 80
18000	383LX183M063N062	0.023	0.020	5.40	6.20	40 x 63
22000	383L223M063N082	0.013	0.009	7.20	9.00	40 x 80
22000	383LX223M063B052V	0.019	0.016	6.76	7.77	50 x 50
27000	383LX273M063N082	0.017	0.014	6.60	7.60	40 x 80
27000	383LX273M063B062V	0.017	0.014	7.34	8.44	50 x 63
33000	383LX333M063B082V	0.015	0.013	8.00	9.20	50 x 80
39000	383LX393M063N102	0.014	0.012	7.53	8.66	40 x 105
39000	383LX393M063B092V	0.014	0.012	8.48	9.75	50 x 92
47000	383LX473M063B102V	0.012	0.010	8.99	10.34	50 x 105

Cap. (µF)	Catalog Part Number	Max. ESR @ +25°C 120 Hz (ohms)	Max. ESR @ +25°C 20 kHz (ohms)	Ripple Amps @ +105°C 120 Hz (A)	Ripple Amps @ +105°C 20 kHz (A)	Nominal Size D x L (mm)
80 Vdc (100 Vdc Surge)						
470	381LX471M080H012	0.390	0.270	0.80	0.90	22 x 25
680	381LX681M080H012	0.270	0.190	1.00	1.15	22 x 25
820	381LX821M080H012	0.222	0.145	1.20	1.40	22 x 25
1000	381LX102M080H012	0.222	0.145	1.20	1.40	22 x 25
1000	381LX102M080J012	0.182	0.120	1.30	1.50	25 x 25
1200	381LX122M080H022	0.235	0.176	1.50	1.73	22 x 30
1500	381LX152M080H032	0.188	0.141	1.70	1.96	22 x 35
1800	381LX182M080J032	0.147	0.080	1.80	2.10	25 x 35
1800	381LX182M080K012	0.111	0.080	1.80	2.10	30 x 25
2200	381LX222M080H452	0.121	0.092	2.10	2.40	22 x 45
2200	381LX222M080A012	0.090	0.063	2.10	2.40	35 x 25
2700	381LX272M080J042	0.104	0.078	2.40	2.76	25 x 40
3300	381LX332M080J052	0.065	0.049	2.60	3.00	25 x 50
3300	381LX332M080K042	0.100	0.075	2.60	3.00	30 x 40
3300	381LX332M080A022	0.065	0.049	2.60	3.00	35 x 30
3900	381LX392M080K042	0.072	0.054	3.00	3.45	30 x 40
4700	381LX472M080K042	0.060	0.045	3.30	3.80	30 x 40
4700	381LX472M080K052	0.048	0.036	3.30	3.80	30 x 50
4700	381LX472M080A042	0.048	0.036	3.30	3.80	35 x 40
5600	381LX562M080A052	0.072	0.054	3.00	3.45	35 x 50
5600	383L562M080N042	0.035	0.022	3.50	4.40	40 x 40
6800	381LX682M080A052	0.041	0.031	3.90	4.50	35 x 50
6800	383LX682M080N042	0.041	0.031	3.90	4.49	40 x 40
8200	383L822M080N052	0.025	0.016	4.40	5.60	40 x 50
10000	383L103M080N062	0.021	0.013	5.30	6.70	40 x 63
12000	383LX123M080B052V	0.035	0.026	6.03	6.93	50 x 50
15000	383L153M080N082	0.015	0.010	6.80	8.40	40 x 80
15000	383LX153M080B062V	0.028	0.021	6.65	7.65	50 x 63
18000	383LX183M080B082V	0.026	0.019	7.29	8.38	50 x 80
22000	383LX223M080N102	0.019	0.014	6.95	7.99	40 x 105
22000	383LX223M080B092V	0.022	0.016	7.83	9.00	50 x 92
27000	383LX273M080B102V	0.018	0.014	8.38	9.64	50 x 105
100 Vdc (125 Vdc Surge)						
330	381LX331M100H012	0.653	0.392	0.80	1.20	22 x 25
470	381LX471M100H012	0.390	0.230	0.92	1.40	22 x 25
560	381LX561M100H012	0.300	0.180	1.10	1.30	22 x 25
680	381LX681M100H012	0.300	0.180	1.10	1.30	22 x 25
820	381LX821M100H012	0.303	0.197	1.40	1.60	22 x 25
820	381LX821M100J012	0.202	0.120	1.40	2.10	25 x 25
1000	381LX102M100H022	0.182	0.110	1.70	2.55	22 x 30
1200	381LX122M100H022	0.195	0.125	1.85	2.70	22 x 30
1200	381LX122M100H032	0.195	0.125	1.85	2.70	22 x 35

Type 381LX / 383LX 105 °C High Ripple, Snap-In Aluminum

High Ripple, Long Life, 2,4 and 5 pin styles available

Cap. (µF)	Catalog Part Number	Max. ESR @ +25°C 120 Hz (ohms)	Max. ESR @ +25°C 20 kHz (ohms)	Ripple Amps @ +105°C 120 Hz (A)	Ripple Amps @ +105°C 20 kHz (A)	Nominal Size D x L (mm)
100 Vdc (125 Vdc Surge)						
1500	381LX152M100H042	0.155	0.100	2.30	2.80	22 x 40
1500	381LX152M100K012	0.155	0.100	2.30	2.80	30 x 25
1800	381LX182M100J042	0.138	0.090	2.30	2.65	25 x 40
2200	381LX222M100J042	0.121	0.080	2.60	2.99	25 x 40
2200	381LX222M100J452	0.090	0.060	2.60	3.90	25 x 45
2700	381LX272M100A022	0.092	0.060	2.90	3.34	35 x 30
3300	381LX332M100K052	0.075	0.053	3.20	4.80	30 x 50
3300	381LX332M100A042	0.075	0.053	3.20	4.80	35 x 40
3900	381LX392M100K052	0.064	0.043	3.60	4.14	30 x 50
4700	381LX472M100A052	0.053	0.040	3.80	5.70	35 x 50
4700	383LX472M100N042	0.053	0.040	3.80	5.70	40 x 40
5600	381LX562M100A052	0.044	0.033	4.10	4.70	35 x 50
5600	383L562M100N062	0.027	0.012	4.60	6.50	40 x 63
6800	383LX682M100N052	0.037	0.027	4.60	5.30	40 x 50
8200	383LX822M100N062	0.030	0.023	5.00	5.77	40 x 63
8200	383L822M100N082	0.020	0.009	6.00	8.20	40 x 80
8200	383LX822M100B052V	0.030	0.023	6.14	7.06	50 x 50
10000	381LX103M100A082	0.033	0.025	6.38	7.34	35 x 80
12000	383LX123M100N082	0.021	0.016	6.44	7.40	40 x 80
12000	383LX123M100B062V	0.022	0.017	7.17	8.25	50 x 63
15000	383LX153M100N102	0.017	0.012	7.37	8.48	40 x 105
15000	383LX153M100B082V	0.019	0.014	8.01	9.21	50 x 80
18000	383LX183M100B092V	0.017	0.012	8.64	9.94	50 x 92
22000	383LX223M100B102V	0.015	0.011	9.32	10.72	50 x 105
160 Vdc (200 Vdc Surge)						
470	381LX471M160H022	0.423	0.190	1.40	2.00	22 x 30
560	381LX561M160H032	0.355	0.160	1.50	2.10	22 x 35
680	381LX681M160H042	0.293	0.132	1.70	2.40	22 x 40
820	381LX821M160J042	0.243	0.109	2.00	2.80	25 x 40
1000	381LX102M160J042	0.216	0.108	2.20	3.08	25 x 40
1200	381LX122M160K032	0.180	0.090	2.30	3.20	30 x 35
1500	381LX152M160K452	0.155	0.077	2.50	3.50	30 x 45
1800	381LX182M160K452	0.111	0.055	2.70	3.78	30 x 45
2200	381LX222M160K052	0.098	0.049	2.90	4.06	30 x 50
2200	383LX222M160N042	0.100	0.060	2.90	4.10	40 x 40
2700	383L272M160N062	0.045	0.027	3.80	5.00	40 x 63
3300	383LX332M160N052	0.070	0.040	3.40	4.70	40 x 40
180 Vdc (225 Vdc Surge)						
270	381LX271M180H012	0.737	0.376	1.10	1.50	22 x 25
330	381LX331M180H022	0.603	0.308	1.20	1.70	22 x 30
390	381LX391M180J012	0.510	0.260	1.30	1.80	25 x 25
470	381LX471M180H032	0.423	0.216	1.40	2.00	22 x 35

Cap. (µF)	Catalog Part Number	Max. ESR @ +25°C 120 Hz (ohms)	Max. ESR @ +25°C 20 kHz (ohms)	Ripple Amps @ +105°C 120 Hz (A)	Ripple Amps @ +105°C 20 kHz (A)	Nominal Size D x L (mm)
180 Vdc (225 Vdc Surge)						
560	381LX561M180H042	0.355	0.181	1.50	2.10	22 x 40
680	381LX681M180J032	0.293	0.149	1.70	2.38	25 x 35
820	381LX821M180K022	0.243	0.124	2.00	2.80	30 x 30
1000	381LX102M180J052	0.216	0.097	2.20	3.08	25 x 50
1200	381LX122M180K452	0.166	0.085	2.30	3.20	30 x 45
1500	381LX152M180K052	0.133	0.068	2.50	3.50	30 x 50
1800	381LX182M180A452	0.111	0.050	2.70	3.80	35 x 45
1800	383L182M180N052	0.059	0.033	3.10	4.20	40 x 50
2200	381LX222M180A052	0.090	0.046	2.90	4.10	35 x 50
2200	383L222M180N062	0.048	0.027	3.70	4.90	40 x 63
3300	383L332M180N082	0.035	0.020	4.80	6.30	40 x 80
200 Vdc (250 Vdc Surge)						
100	381LX101M200H012	1.660	0.750	0.50	0.70	22 x 25
150	381LX151M200H012	1.100	0.500	0.70	0.95	22 x 25
220	381LX221M200H012	0.754	0.339	1.00	1.40	22 x 25
270	381LX271M200H012	0.730	0.300	1.10	1.50	22 x 25
270	381LX271M200J012	0.614	0.276	1.10	1.50	25 x 25
330	381LX331M200H022	0.603	0.308	1.25	1.79	22 x 30
330	381LX331M200J012	0.603	0.308	1.20	1.70	25 x 25
390	381LX391M200H022	0.510	0.230	1.30	1.80	22 x 30
470	381LX471M200J022	0.423	0.190	1.40	2.00	25 x 30
470	381LX471M200K012	0.353	0.159	1.40	2.00	30 x 25
560	381LX561M200H042	0.355	0.160	1.50	2.10	22 x 40
560	381LX561M200J022	0.355	0.160	1.50	2.10	25 x 30
680	381LX681M200J042	0.293	0.132	1.70	2.40	25 x 40
680	381LX681M200K022	0.244	0.110	1.70	2.40	30 x 30
820	381LX821M200H452	0.263	0.118	2.00	2.80	22 x 45
820	381LX821M200J042	0.243	0.109	2.04	2.92	25 x 40
820	381LX821M200K022	0.263	0.118	2.00	2.80	30 x 30
1000	381LX102M200J052	0.216	0.108	2.20	3.10	25 x 50
1000	381LX102M200K032	0.216	0.108	2.20	3.10	30 x 35
1000	381LX102M200K452	0.216	0.108	2.20	3.10	30 x 45
1000	381LX102M200A022	0.216	0.108	2.20	3.10	35 x 30
1200	381LX122M200K042	0.193	0.097	2.30	3.20	30 x 40
1200	381LX122M200K052	0.193	0.097	2.30	3.20	30 x 50
1200	381LX122M200A032	0.193	0.097	2.30	3.20	35 x 35
1500	381LX152M200K052	0.155	0.077	2.50	3.50	30 x 50
1500	381LX152M200A042	0.155	0.077	2.50	3.50	35 x 40
1800	381LX182M200A452	0.129	0.077	2.70	3.80	35 x 45
1800	383LX182M200N042	0.129	0.077	2.70	3.78	40 x 40
1800	383L182M200N052	0.063	0.033	3.00	4.10	40 x 50
2200	381LX222M200A052	0.105	0.063	2.90	4.00	35 x 50

Type 381LX / 383LX 105 °C High Ripple, Snap-In Aluminum

High Ripple, Long Life, 2,4 and 5 pin styles available

Cap. (µF)	Catalog Part Number	Max. ESR @ +25°C 120 Hz (ohms)	Max. ESR @ +25°C 20 kHz (ohms)	Ripple Amps @ +105°C 120 Hz (A)	Ripple Amps @ +105°C 20 kHz (A)	Nominal Size D x L (mm)
200 Vdc (250 Vdc Surge)						
2200	383L222M200N062	0.051	0.027	3.60	4.90	40 x 63
2700	383LX272M200N052	0.086	0.052	3.55	4.97	40 x 50
2700	383L272M200N082	0.032	0.018	4.60	6.20	40 x 80
3300	381LX332M200A082	0.065	0.039	4.50	6.33	35 x 80
3300	383LX332M200N062	0.700	0.040	4.40	6.20	40 x 63
3300	383LX332M200B052V	0.075	0.045	5.20	7.28	50 x 50
3900	383LX392M200B062V	0.064	0.038	5.90	8.26	50 x 63
4700	383LX472M200N082	0.050	0.030	5.75	8.10	40 x 80
4700	383LX472M200B082V	0.053	0.032	6.82	9.55	50 x 80
5600	383LX562M200N102	0.041	0.025	6.76	9.46	40 x 105
5600	383LX562M200B092V	0.044	0.027	7.68	10.75	50 x 92
6800	383LX682M200B102V	0.034	0.020	8.71	12.19	50 x 105
250 Vdc (300 Vdc Surge)						
68	381LX680M250H202	2.926	1.493	0.40	0.60	22 x 20
68	381LX680M250H012	2.440	1.220	0.40	0.60	22 x 25
100	381LX101M250H012	1.660	0.830	0.55	0.78	22 x 25
150	381LX151M250H012	1.327	0.465	0.79	0.11	22 x 25
180	381LX181M250H012	1.106	0.553	0.88	1.23	22 x 25
220	381LX221M250H012	0.905	0.452	1.00	1.40	22 x 25
270	381LX271M250H022	0.737	0.332	1.18	1.69	22 x 30
330	381LX331M250H022	0.502	0.251	1.20	1.70	22 x 30
330	381LX331M250J022	0.502	0.251	1.20	1.70	25 x 30
390	381LX391M250J032	0.510	0.229	1.49	2.12	25 x 35
470	381LX471M250J032	0.423	0.191	1.40	1.96	25 x 35
470	381LX471M250K022	0.353	0.176	1.40	2.00	30 x 30
560	381LX561M250J032	0.355	0.160	1.80	2.57	25 x 35
560	381LX561M250K032	0.296	0.148	1.50	2.10	30 x 35
560	381LX561M250A012	0.296	0.148	1.50	2.10	35 x 25
680	381LX681M250J052	0.244	0.134	1.70	2.38	25 x 50
680	381LX681M250K042	0.244	0.134	1.70	2.38	30 x 40
680	381LX681M250A022	0.244	0.134	1.70	2.38	35 x 30
820	381LX821M250K452	0.202	0.111	2.00	2.80	30 x 45
820	381LX821M250A032	0.202	0.111	2.00	2.80	35 x 35
1000	381LX102M250K052	0.199	0.109	2.20	3.10	30 x 50
1000	381LX102M250A042	0.199	0.109	2.20	3.10	35 x 40
1000	381LX102M250A452	0.166	0.099	2.30	3.20	35 x 45
1200	381LX122M250A452	0.166	0.099	2.30	3.20	35 x 45
1200	383LX122M250N042	0.180	0.117	2.66	3.72	40 x 40
1200	383L122M250N052	0.081	0.031	2.60	4.30	40 x 50
1500	381LX152M250A052	0.144	0.093	2.50	3.50	35 x 50
1800	383LX182M250N052	0.120	0.078	3.25	4.55	40 x 50

Cap. (µF)	Catalog Part Number	Max. ESR @ +25°C 120 Hz (ohms)	Max. ESR @ +25°C 20 kHz (ohms)	Ripple Amps @ +105°C 120 Hz (A)	Ripple Amps @ +105°C 20 kHz (A)	Nominal Size D x L (mm)
250 Vdc (300 Vdc Surge)						
1800	383L182M250N062	0.066	0.025	3.10	5.10	40 x 63
2200	381LX222M250A082	0.096	0.064	3.75	5.25	35 x 80
2200	383LX222M250N062	0.098	0.064	3.70	5.15	40 x 63
2200	383L222M250N082	0.043	0.017	4.00	6.40	40 x 80
2200	383LX222M250B052V	0.098	0.064	4.35	6.09	50 x 50
2700	383LX272M250N082	0.092	0.047	3.10	4.30	40 x 80
2700	383LX272M250B062V	0.080	0.052	4.98	6.97	50 x 63
3300	383LX332M250N082	0.065	0.042	4.86	6.80	40 x 80
3900	383LX392M250N102	0.055	0.036	5.61	7.85	40 x 105
3900	383LX392M250B082V	0.055	0.036	6.10	8.54	50 x 80
4300	383LX432M250B092V	0.050	0.033	6.67	9.34	50 x 92
4700	383LX472M250B102V	0.046	0.030	7.03	9.84	50 x 105
315 Vdc (365 Vdc Surge)						
82	381LX820M315H012	2.430	1.240	0.60	0.90	22 x 25
100	381LX101M315H012	1.990	1.020	0.70	1.00	22 x 25
120	381LX121M315H012	1.660	0.850	0.80	1.10	22 x 25
150	381LX151M315H022	1.330	0.600	0.82	1.15	22 x 30
180	381LX181M315H022	1.110	0.550	0.90	1.25	22 x 30
220	381LX221M315H032	0.900	0.410	0.98	1.37	22 x 35
220	381LX221M315K022	0.904	0.461	1.00	1.40	30 x 30
270	381LX271M315J032	0.740	0.330	1.10	1.54	25 x 35
270	381LX271M315K022	0.737	0.376	1.10	1.50	30 x 30
270	381LX271M315K032	0.737	0.376	1.10	1.50	30 x 35
270	381LX271M315A022	0.737	0.376	1.10	1.50	35 x 30
330	381LX331M315J042	0.600	0.270	1.20	1.68	25 x 40
330	381LX331M315K032	0.603	0.308	1.20	1.70	30 x 35
330	381LX331M315K042	0.603	0.308	1.20	1.70	30 x 40
330	381LX331M315A022	0.603	0.308	1.20	1.70	35 x 30
390	381LX391M315K452	0.510	0.260	1.30	1.80	30 x 45
390	381LX391M315A032	0.510	0.260	1.30	1.80	35 x 35
470	381LX471M315K452	0.423	0.216	1.40	2.00	30 x 45
470	381LX471M315K052	0.423	0.216	1.40	2.00	30 x 50
470	381LX471M315A032	0.423	0.216	1.40	2.00	35 x 35
470	381LX471M315A042	0.423	0.216	1.40	2.00	35 x 40
560	381LX561M315K052	0.355	0.181	1.50	2.10	30 x 50
560	381LX561M315A042	0.355	0.181	1.50	2.10	35 x 40
560	381LX561M315A452	0.355	0.181	1.50	2.10	35 x 45
680	381LX681M315A452	0.293	0.149	1.70	2.40	35 x 45
680	381LX681M315A052	0.293	0.149	1.70	2.40	35 x 50
820	381LX821M315A052	0.242	0.030	2.00	2.80	35 x 50
820	383L821M315N052	0.190	0.130	1.70	2.10	40 x 50
1200	383L122M315N062	0.150	0.110	2.10	2.50	40 x 63
1500	383L152M315N082	0.110	0.055	2.70	3.20	40 x 80

Type 381LX / 383LX 105 °C High Ripple, Snap-In Aluminum

High Ripple, Long Life, 2,4 and 5 pin styles available

Cap. (µF)	Catalog Part Number	Max. ESR @ +25°C 120 Hz (ohms)	Max. ESR @ +25°C 20 kHz (ohms)	Ripple Amps @ +105°C 120 Hz (A)	Ripple Amps @ +105°C 20 kHz (A)	Nominal Size D x L (mm)
350 Vdc (400 Vdc Surge)						
82	381LX820M350H012	2.430	1.240	0.60	0.90	22 x 25
100	381LX101M350H022	1.990	1.020	0.70	1.00	22 x 30
120	381LX121M350H022	1.660	0.750	0.75	1.05	22 x 30
150	381LX151M350H022	1.330	0.600	0.77	1.08	22 x 30
180	381LX181M350H032	1.110	0.500	0.87	1.22	22 x 35
220	381LX221M350H042	0.900	0.410	1.00	1.40	22 x 40
270	381LX271M350H452	0.740	0.380	1.10	1.50	22 x 45
270	381LX271M350K022	0.737	0.376	1.10	1.50	30 x 30
330	381LX331M350K042	0.603	0.308	1.20	1.70	30 x 40
330	381LX331M350A022	0.603	0.308	1.20	1.70	35 x 30
390	381LX391M350K452	0.510	0.260	1.30	1.80	30 x 45
390	381LX391M350A022	0.510	0.260	1.30	1.80	35 x 30
470	381LX471M350K052	0.423	0.216	1.40	2.00	30 x 50
470	381LX471M350A042	0.423	0.216	1.40	2.00	35 x 40
560	381LX561M350A452	0.355	0.181	1.50	2.10	35 x 45
560	383L561M350N042	0.299	0.205	1.30	1.50	40 x 40
680	381LX681M350A052	0.293	0.149	1.70	2.40	35 x 50
680	383LX681M350N042	0.317	0.127	2.30	3.22	40 x 40
820	381LX821M350A062	0.303	0.155	2.70	3.70	35 x 63
820	383LX821M350N052	0.303	0.155	2.70	3.70	40 x 50
1000	383L102M350N062	0.170	0.117	2.00	2.40	40 x 63
1000	383LX102M350B052V	0.216	0.066	3.56	4.96	50 x 50
1200	381LX122M350A082	0.207	0.106	3.20	4.50	35 x 80
1200	383LX122M350N062	0.207	0.106	3.20	4.50	40 x 63
1500	381LX152M350A102	0.144	0.057	4.78	6.69	35 x 105
1500	383LX152M350N082	0.166	0.085	3.80	5.25	40 x 80
1500	383LX152M350B062V	0.144	0.057	4.16	5.82	50 x 63
1800	383LX182M350N102	0.120	0.048	5.23	7.32	40 x 105
1800	383LX182M350B082V	0.120	0.048	5.69	7.97	50 x 80
2000	383LX202M350B092V	0.108	0.043	6.34	8.88	50 x 92
2200	383LX222M350B102V	0.098	0.039	6.60	9.30	50 x 105
400 Vdc (450 Vdc Surge)						
33	381LX330M400H202	5.020	1.760	0.20	0.30	22 x 20
47	381LX470M400H012	4.500	1.600	0.30	0.42	22 x 25
56	381LX560M400H012	3.530	1.240	0.47	0.66	22 x 25
68	381LX680M400H012	2.927	1.020	0.45	0.60	22 x 25
68	381LX680M400J012	1.950	0.683	0.60	0.80	25 x 25
82	381LX820M400H012	2.440	0.850	0.55	0.80	22 x 25
100	381LX101M400H022	1.658	0.580	0.50	0.70	22 x 30
100	381LX101M400J012	1.658	0.580	0.70	1.00	25 x 25
120	381LX121M400J012	1.100	0.387	0.80	1.10	25 x 25
120	381LX121M400J022	1.100	0.387	0.80	1.10	25 x 30

Cap. (µF)	Catalog Part Number	Max. ESR @ +25°C 120 Hz (ohms)	Max. ESR @ +25°C 20 kHz (ohms)	Ripple Amps @ +105°C 120 Hz (A)	Ripple Amps @ +105°C 20 kHz (A)	Nominal Size D x L (mm)
400 Vdc (450 Vdc Surge)						
150	381LX151M400H022	0.921	0.322	0.90	1.30	22 x 30
150	381LX151M400H032	1.330	0.460	0.80	1.10	22 x 35
150	381LX151M400J012	1.110	0.870	0.80	1.10	25 x 25
180	381LX181M400J022	0.921	0.322	0.90	1.30	25 x 30
180	381LX181M400J032	1.110	0.500	0.95	1.33	25 x 35
180	381LX181M400K022	0.921	0.322	0.90	1.30	30 x 30
220	381LX221M400H452	0.614	0.215	1.20	1.70	22 x 45
220	381LX221M400K022	0.754	0.264	1.10	1.50	30 x 30
220	381LX221M400A012	0.754	0.264	1.10	1.50	35 x 25
270	381LX271M400J052	0.614	0.215	1.20	1.70	25 x 50
270	381LX271M400K032	0.614	0.215	1.20	1.70	30 x 35
270	381LX271M400A022	0.614	0.215	1.20	1.70	35 x 30
330	381LX331M400K452	0.502	0.201	1.40	1.90	30 x 45
330	381LX331M400A032	0.502	0.201	1.40	1.90	35 x 35
390	381LX391M400J452	0.425	0.170	1.55	2.20	25 x 45
390	381LX391M400K052	0.425	0.170	1.55	2.20	30 x 50
390	381LX391M400A042	0.425	0.170	1.55	2.20	35 x 40
470	381LX471M400A452	0.353	0.141	1.80	2.50	35 x 45
470	383LX471M400N042	0.353	0.141	1.80	2.50	40 x 40
560	381LX561M400A052	0.296	0.118	1.80	2.50	35 x 50
680	383LX681M400N052	0.244	0.098	2.20	3.00	40 x 50
820	381LX821M400A062	0.202	0.081	2.44	3.42	35 x 63
820	383LX821M400B052V	0.202	0.081	3.20	4.40	50 x 50
1000	381LX102M400A082	0.202	0.081	3.00	4.20	35 x 80
1000	383LX102M400N062	0.202	0.081	3.00	4.20	40 x 63
1200	381LX122M400A102	0.138	0.055	3.80	5.30	35 x 105
1200	383LX122M400N082	0.138	0.055	3.80	5.30	40 x 80
1200	383LX122M400B062V	0.152	0.061	4.20	5.90	50 x 63
1500	383LX152M400N102	0.111	0.044	4.80	6.70	40 x 105
1500	383LX152M400B082V	0.122	0.049	5.20	7.30	50 x 80
1600	383LX162M400B092V	0.114	0.046	5.60	8.00	50 x 92
1800	383LX182M400B102V	0.101	0.041	6.48	9.10	50 x 105
420 Vdc (470 Vdc Surge)						
100	381LX101M420H022	1.820	0.820	0.65	0.90	22 x 30
120	381LX121M420H022	1.660	0.750	0.70	1.00	22 x 30
150	381LX151M420H042	1.330	0.600	0.79	1.11	22 x 40
180	381LX181M420H042	1.110	0.500	0.87	1.22	22 x 40
180	381LX181M420K022	1.000	0.450	0.88	1.20	30 x 30
220	381LX221M420H452	0.900	0.410	1.05	1.50	22 x 45
220	381LX221M420K022	0.750	0.260	1.10	1.50	30 x 30
270	381LX271M420J452	0.740	0.330	1.19	1.67	25 x 45
270	381LX271M420K032	0.610	0.210	1.20	1.70	30 x 35

Type 381LX / 383LX 105 °C High Ripple, Snap-In Aluminum

High Ripple, Long Life, 2,4 and 5 pin styles available

Cap. (µF)	Catalog Part Number	Max. ESR @ +25°C		Ripple Amps @ +105°C		Nominal Size
		120 Hz (ohms)	20 kHz (ohms)	120 Hz (A)	20 kHz (A)	D x L (mm)
420 Vdc (470 Vdc Surge)						
270	381LX271M420A022	0.610	0.210	1.20	1.70	35 x 30
330	381LX331M420K452	0.500	0.200	1.35	1.90	30 x 45
330	381LX331M420A032	0.502	0.200	1.35	1.90	35 x 35
390	381LX391M420K052	0.420	0.170	1.55	2.18	30 x 50
390	381LX391M420A042	0.420	0.170	1.55	2.18	35 x 40
470	381LX471M420A452	0.350	0.141	1.75	2.45	35 x 45
470	383LX471M420N042	0.350	0.141	1.78	2.45	40 x 40
560	381LX561M420A052	0.300	0.120	1.80	2.50	35 x 50
680	383LX681M420N052	0.250	0.100	2.10	2.95	40 x 50
450 Vdc (500 Vdc Surge)						
56	381LX560M450H012	3.530	1.240	0.47	0.66	22 x 25
68	381LX680M450H012	2.930	1.020	0.53	0.73	22 x 25
82	381LX820M450H022	2.430	1.090	0.64	0.91	22 x 30
100	381LX101M450H022	1.990	0.710	0.65	0.90	22 x 30
100	381LX101M450J022	1.660	0.580	0.65	0.90	25 x 30
120	381LX121M450H032	1.660	0.750	0.70	1.00	22 x 35
150	381LX151M450H032	1.330	0.590	0.80	1.10	22 x 35
150	381LX151M450K022	1.100	0.390	0.80	1.10	30 x 30
180	381LX181M450J032	1.110	0.380	0.90	1.20	25 x 35
180	381LX181M450K032	0.920	0.320	0.90	1.20	30 x 35
220	381LX221M450J052	0.750	0.260	1.00	1.40	25 x 50
220	381LX221M450K042	0.750	0.260	1.00	1.40	30 x 40
220	381LX221M450A022	0.750	0.260	1.00	1.40	35 x 30
220	381LX221M450A042	0.500	0.176	1.40	1.90	35 x 40
270	381LX271M450K452	0.614	0.246	1.20	1.70	30 x 45
270	381LX271M450A032	0.614	0.246	1.20	1.70	35 x 35
330	381LX331M450K052	0.502	0.201	1.40	1.90	30 x 50
330	381LX331M450A042	0.502	0.176	1.40	1.90	35 x 40
390	381LX391M450A452	0.425	0.150	1.60	2.20	35 x 45
390	383LX391M450N042	0.425	0.170	1.68	2.35	40 x 40
470	381LX471M450A052	0.353	0.123	1.70	2.40	35 x 50
470	383LX471M450N042	0.350	0.140	1.75	2.45	40 x 40
560	381LX561M450A062	0.296	0.104	2.20	3.00	35 x 63
680	383L681M450A082	0.188	0.124	2.00	2.50	35 x 80
680	383LX681M450N062	0.244	0.085	2.50	3.50	40 x 63
680	383LX681M450B052V	0.244	0.085	2.90	4.06	50 x 50
820	383LX821M450A082	0.202	0.071	2.70	3.80	35 x 80
820	383LX821M450B062V	0.222	0.078	3.42	4.79	50 x 63
1000	383LX102M450N082	0.166	0.058	3.50	4.90	40 x 80
1200	383LX122M450N102	0.138	0.048	4.33	6.06	40 x 105
1200	383LX122M450B082V	0.152	0.053	4.70	6.58	50 x 80
1300	383LX132M450B092V	0.140	0.049	5.16	7.25	50 x 92
1500	383LX152M450B102V	0.122	0.043	6.03	8.44	50 x 105

Notice and Disclaimer: All product drawings, descriptions, specifications, statements, information and data (collectively, the "Information") in this datasheet or other publication are subject to change. The customer is responsible for checking, confirming and verifying the extent to which the Information contained in this datasheet or other publication is applicable to an order at the time the order is placed. All Information given herein is believed to be accurate and reliable, but it is presented without any guarantee, warranty, representation or responsibility of any kind, expressed or implied. Statements of suitability for certain applications are based on the knowledge that the Cornell Dubilier company providing such statements ("Cornell Dubilier") has of operating conditions that such Cornell Dubilier company regards as typical for such applications, but are not intended to constitute any guarantee, warranty or representation regarding any such matter – and Cornell Dubilier specifically and expressly disclaims any guarantee, warranty or representation concerning the suitability for a specific customer application, use, storage, transportation, or operating environment. The Information is intended for use only by customers who have the requisite experience and capability to determine the correct products for their application. Any technical advice inferred from this Information or otherwise provided by Cornell Dubilier with reference to the use of any Cornell Dubilier products is given gratis (unless otherwise specified by Cornell Dubilier), and Cornell Dubilier assumes no obligation or liability for the advice given or results obtained. Although Cornell Dubilier strives to apply the most stringent quality and safety standards regarding the design and manufacturing of its products, in light of the current state of the art, isolated component failures may still occur. Accordingly, customer applications which require a high degree of reliability or safety should employ suitable designs or other safeguards (such as installation of protective circuitry or redundancies or other appropriate protective measures) in order to ensure that the failure of an electrical component does not result in a risk of personal injury or property damage. Although all product-related warnings, cautions and notes must be observed, the customer should not assume that all safety measures are indicated in such warnings, cautions and notes, or that other safety measures may not be required.

Type 381LR 105 °C Highest Ripple, Snap-In Aluminum

Ultra-High Ripple Capabilities

Compared to standard 105 °C snap-ins like the Type 381L/LX Type 381LR can handle an extra 25% ripple current or more. This remarkable capability stems from advances in electrolyte that give extremely low ESR values.In high ripple current applications like motor drives you can save by using fewer capacitors.

Highlights

- The right choice for motor drive bus capacitors
- The right choice for UPS bus capacitors
- Compare to Type 381L
- Up to 2 times the ripple current

Specifications

Temperature Range	–40 °C to + 105 °C ≤ 315 Vdc –25 °C to + 105 °C ≥ 350 Vdc
Rated Voltage Range	200 Vdc to 450 Vdc
Capacitance Range	56 µF to 2,200 µF
Capacitance Tolerance	± 20%
Leakage Current	≤3 $\sqrt{CV}$ µA, 4 mA max, 5 minutes
Ripple Current Multipliers	Ambient Temperature **45 °C**: 2.35 **60 °C**: 2.20 **70 °C**: 2.00 **85 °C**: 1.70 **105 °C**: 1.00 Frequency **50 Hz**: 0.75 **60 Hz**: 0.80 **120 Hz**: 1.00 **500 kHz**: 1.20 **1 kHz**: 1.25 **10 kHz & Up**: 1.40
Low Temperature Characteristics	Impedance ratio: $Z_{-20°C}/Z_{+25°C}$ ≤ 3 (200–450Vdc)
Endurance Life Test	3000 h at full load at 105 °C Δ Capacitance ±20% ESR 200% of limit DCL 100% of limit
Shelf Life Test	1000 h at 105 °C Δ Capacitance ±20% ESR 200% of limit DCL 100% of limit
Vibration	10 to 55 Hz, 0.06" and 10 g max, 2 h each plane
RoHS Compliant	

Type 381LR 105 °C Highest Ripple, Snap-In Aluminum

Ultra-High Ripple Capabilities

Part Numbering System

381LR	271	M	200	H01	2
Type	Cap	Tolerance	Voltage	Case Code	Insulating Sleeve
381LR	**271** = 270 µF **222** = 2200 µF	**M =** ±20%	**160** = 160 Vdc **450** = 450 Vdc		**2** = PVC

Outline Drawing

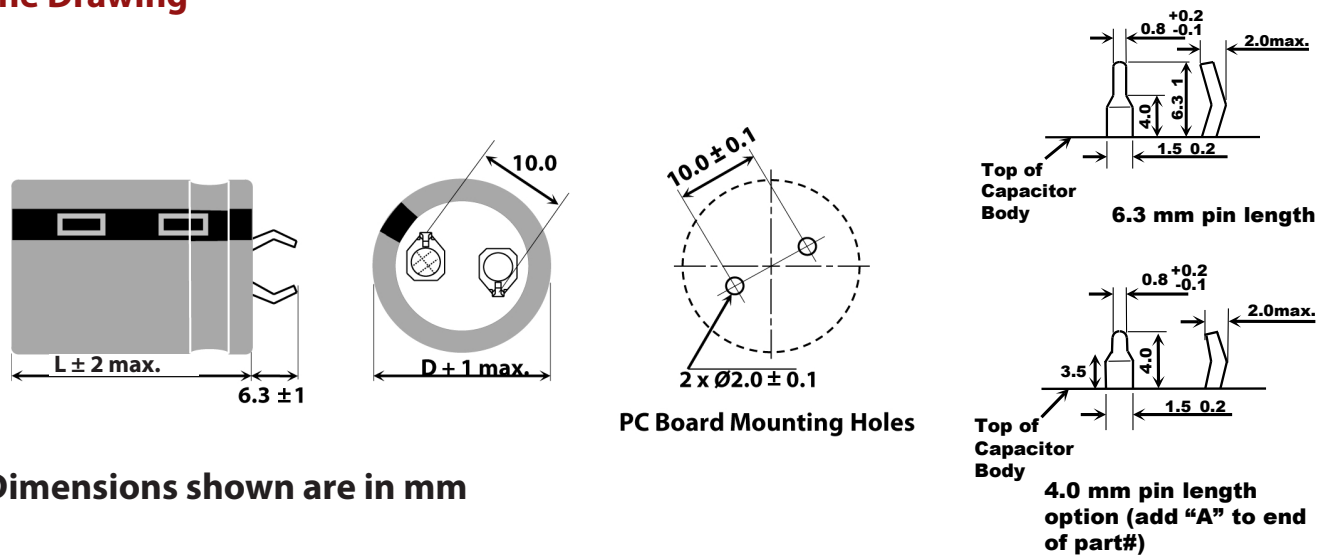

Dimensions shown are in mm

Insulated Case Dimensions

Case Code	DIAMETER D mm	DIAMETER D inches	LENGTH L mm	LENGTH L inches	Typical Weight (grams)	Case Code	DIAMETER D mm	DIAMETER D inches	LENGTH L mm	LENGTH L inches	Typical Weight (grams)
H01	22	0.87	25	0.98	16	K01	30	1.18	25	0.98	30
H02	22	0.87	30	1.18	19	K02	30	1.18	30	1.18	35
H03	22	0.87	35	1.38	22	K03	30	1.18	35	1.38	40
H04	22	0.87	40	1.57	24	K04	30	1.18	40	1.57	44
H45	22	0.87	45	1.77	28	K45	30	1.18	45	1.77	49
H05	22	0.87	50	1.97	31	K05	30	1.18	50	1.97	53
J01	25	0.98	25	0.98	20	A01	35	1.38	25	0.98	42
J02	25	0.98	30	1.18	24	A02	35	1.38	30	1.18	48
J03	25	0.98	35	1.38	27	A03	35	1.38	35	1.38	54
J04	25	0.98	40	1.57	31	A04	35	1.38	40	1.57	60
J45	25	0.98	45	1.77	35	A45	35	1.38	45	1.77	67
J05	25	0.98	50	1.97	38	A05	35	1.38	50	1.97	74
						A55	35	1.38	55	2.17	80

Type 381LR 105 °C Highest Ripple, Snap-In Aluminum

Ultra-High Ripple Capabilities

Ratings

Cap. (uF)	Catalog Part Number	Max. ESR @ +25°C 120 Hz (ohms)	Max. ESR @ +25°C 20 kHz (ohms)	Ripple Amps @ +105°C 120 Hz (A)	Ripple Amps @ +105°C 20 kHz (A)	Nominal Size D x L (mm)
200 Vdc (250 Vdc Surge)						
330	381LR331M200H012	0.603	0.271	1.25	1.79	22 x 25
390	381LR391M200H022	0.510	0.229	1.35	1.93	22 x 30
470	381LR471M200H032	0.423	0.191	1.50	2.14	22 x 35
470	381LR471M200J022	0.317	0.143	1.85	2.64	25 x 30
560	381LR561M200H042	0.355	0.180	1.67	2.38	22 x 40
680	381LR681M200J032	0.293	0.132	1.72	2.45	25 x 35
680	381LR681M200K022	0.219	0.099	2.42	3.45	30 x 30
820	381LR821M200J042	0.243	0.109	0.20	2.92	25 x 40
820	381LR821M200K022	0.182	0.082	2.63	3.76	30 x 30
1000	381LR102M200J452	0.149	0.067	2.84	4.06	25 x 45
1000	381LR102M200J052	0.199	0.090	2.42	3.46	25 x 50
1000	381LR102M200K032	0.149	0.067	2.84	4.06	30 x 35
1200	381LR122M200J052	0.166	0.083	2.63	3.76	25 x 50
1200	381LR122M200K042	0.124	0.062	3.13	4.47	30 x 40
1200	381LR122M200A032	0.124	0.062	3.13	4.47	35 x 35
1500	381LR152M200K052	0.099	0.050	3.56	5.06	30 x 50
1500	381LR152M200A042	0.099	0.050	3.56	5.06	35 x 40
1800	381LR182M200A452	0.083	0.041	3.84	5.48	35 x 45
2200	381LR222M200A052	0.066	0.040	4.12	5.89	35 x 50
250 Vdc (300 Vdc Surge)						
220	381LR221M250H012	0.905	0.407	1.00	1.43	22 x 25
270	381LR271M250H022	0.737	0.332	1.18	1.69	22 x 30
330	381LR331M250H022	0.603	0.271	1.30	1.65	22 x 30
390	381LR391M250J032	0.510	0.229	1.49	2.12	25 x 35
470	381LR471M250J032	0.423	0.191	1.65	2.35	25 x 35
470	381LR471M250K022	0.317	0.143	1.85	2.64	30 x 30
560	381LR561M250J032	0.355	0.160	1.80	2.57	25 x 35
560	381LR561M250K022	0.266	0.120	2.14	3.05	30 x 30
680	381LR681M250H052	0.219	0.099	2.42	3.45	22 x 50
680	381LR681M250J452	0.293	0.132	2.00	2.85	25 x 45
680	381LR681M250K032	0.219	0.099	2.42	3.45	30 x 35
820	381LR821M250K042	0.182	0.082	2.63	3.76	30 x 40
820	381LR821M250A032	0.182	0.082	2.63	3.76	35 x 35
1000	381LR102M250K052	0.149	0.067	2.84	4.06	30 x 50
1000	381LR102M250A042	0.149	0.067	2.84	4.06	35 x 40
1200	381LR122M250A452	0.124	0.062	3.13	4.47	35 x 45
1500	381LR152M250A052	0.099	0.050	3.56	5.06	35 x 50
400 Vdc (450 Vdc Surge)						
82	381LR820M400H012	2.440	0.853	0.55	0.80	22 x 25
100	381LR101M400H012	1.990	0.700	0.50	0.70	22 x 25
100	381LR101M400H022	1.326	0.700	0.50	0.70	22 x 30
100	381LR101M400J012	1.326	0.597	0.91	1.30	25 x 25

Type 381LR 105 °C Highest Ripple, Snap-In Aluminum

Ultra-High Ripple Capabilities

Cap. (uF)	Catalog Part Number	Max. ESR @ +25°C 120 Hz (ohms)	Max. ESR @ +25°C 20 kHz (ohms)	Ripple Amps @ +105°C 120 Hz (A)	Ripple Amps @ +105°C 20 kHz (A)	Nominal Size D x L (mm)
400 Vdc (450 Vdc Surge)						
120	381LR121M400H022	1.659	0.746	0.70	0.98	22 x 30
150	381LR151M400H032	1.327	0.464	0.80	1.10	22 x 35
180	381LR181M400J032	1.106	0.500	0.95	1.33	25 x 35
180	381LR181M400K022	0.737	0.322	1.12	1.60	30 x 30
220	381LR221M400H452	0.905	0.407	1.00	1.40	22 x 45
220	381LR221M400J042	0.603	0.271	1.42	2.03	25 x 40
220	381LR221M400K022	0.603	0.271	1.42	2.03	30 x 30
220	381LR221M400A012	0.603	0.271	1.42	2.03	35 x 25
270	381LR271M400H452	0.603	0.271	1.42	2.03	22 x 45
270	381LR271M400K022	0.737	0.332	1.22	1.71	30 x 30
270	381LR271M400K032	0.491	0.221	1.56	2.23	30 x 35
330	381LR331M400K032	0.603	0.272	1.39	1.95	30 x 35
330	381LR331M400K042	0.402	0.181	1.71	2.44	30 x 40
330	381LR331M400A022	0.402	0.181	1.71	2.44	35 x 30
390	381LR391M400J452	0.340	0.153	1.85	2.64	25 x 45
390	381LR391M400K452	0.340	0.153	1.85	2.64	30 x 45
390	381LR391M400A032	0.340	0.153	1.85	2.64	35 x 35
470	381LR471M400A042	0.282	0.127	2.01	2.87	35 x 40
560	381LR561M400A452	0.237	0.107	2.35	3.36	35 x 45
420 Vdc (470 Vdc Surge)						
68	381LR680M420H012	2.930	1.320	0.56	0.80	22 x 25
82	381LR820M420H012	2.430	1.090	0.64	0.91	22 x 25
100	381LR101M420H012	1.990	0.900	0.70	1.00	22 x 25
120	381LR121M420H022	1.660	0.750	0.70	1.00	22 x 30
180	381LR181M420K022	0.737	0.332	1.12	1.60	30 x 30
220	381LR221M420H452	0.900	0.410	1.05	1.51	22 x 45
220	381LR221M420K032	0.603	0.271	1.42	2.03	30 x 35
270	381LR271M420J452	0.740	0.330	1.20	1.71	25 x 45
270	381LR271M420K042	0.491	0.221	1.68	2.40	30 x 40
330	381LR331M420A032	0.402	0.181	1.78	2.54	35 x 35
330	381LR331M420K452	0.402	0.181	1.78	2.54	30 x 45
390	381LR391M420K052	0.340	0.153	1.91	2.73	30 x 50
390	381LR391M420A042	0.340	0.153	1.91	2.73	35 x 40
470	381LR471M420A452	0.282	0.127	2.23	3.18	35 x 45
450 Vdc (500 Vdc Surge)						
56	381LR560M450H012	3.550	1.600	0.50	0.71	22 x 25
68	381LR680M450H012	2.930	1.320	0.53	0.75	22 x 25
82	381LR820M450H012	1.617	0.728	0.80	1.01	22 x 25
82	381LR820M450H022	2.430	1.090	0.64	0.91	22 x 30
100	381LR101M450H022	1.990	0.900	0.70	1.00	22 x 30
100	381LR101M450J022	1.326	0.597	0.91	1.30	25 x 30
120	381LR121M450H032	1.660	0.750	0.80	1.15	22 x 35

Type 381LR 105 °C Highest Ripple, Snap-In Aluminum

Ultra-High Ripple Capabilities

Cap. (uF)	Catalog Part Number	Max. ESR @ +25°C 120 Hz (ohms)	Max. ESR @ +25°C 20 kHz (ohms)	Ripple Amps @ +105°C 120 Hz (A)	Ripple Amps @ +105°C 20 kHz (A)	Nominal Size D x L (mm)
450 Vdc (500 Vdc Surge)						
150	381LR151M450H032	1.327	0.594	0.88	1.26	22 x 35
150	381LR151M450J022	1.330	0.464	0.830	1.04	25 x 30
150	381LR151M450J042	0.884	0.396	1.07	1.53	25 x 40
150	381LR151M450K022	0.884	0.396	1.07	1.53	30 x 30
180	381LR181M450H042	1.110	0.500	1.00	1.43	22 x 40
180	381LR181M450K022	0.737	0.332	1.12	1.60	30 x 30
220	381LR221M450J042	0.603	0.271	1.42	2.03	25 x 40
220	381LR221M450K032	0.603	0.271	1.42	2.03	30 x 35
220	381LR221M450A022	0.603	0.271	1.42	2.03	35 x 30
270	381LR271M450K042	0.491	0.221	1.72	2.45	30 x 40
270	381LR271M450A032	0.491	0.221	1.72	2.45	35 x 35
330	381LR331M450K052	0.402	0.181	1.85	2.64	30 x 50
330	381LR331M450A042	0.402	0.181	1.85	2.64	35 x 40
390	381LR391M450A042	0.340	0.153	1.97	2.82	35 x 40
470	381LR471M450A052	0.282	0.127	2.47	3.53	35 x 50

Typical Performance Curves

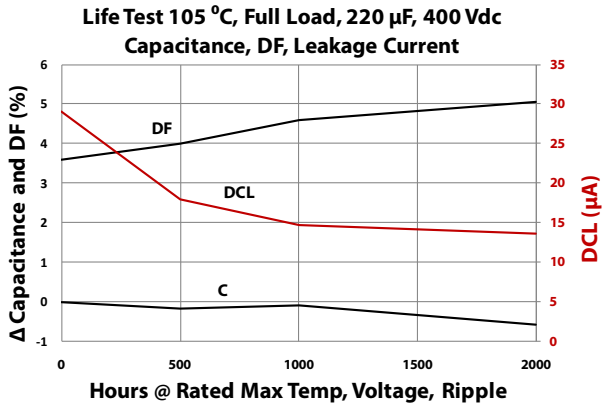

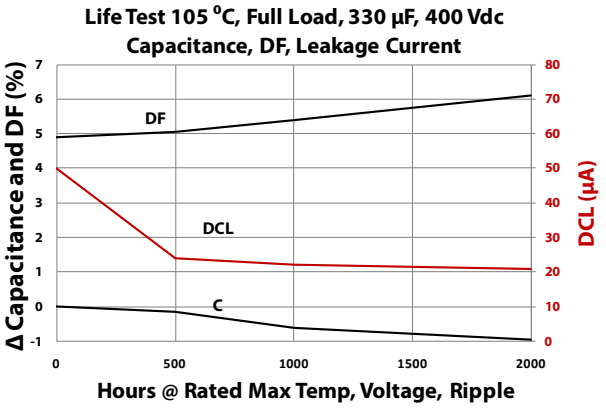

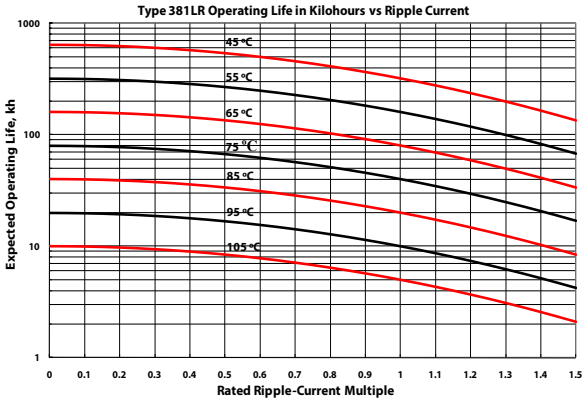

Notice and Disclaimer: All product drawings, descriptions, specifications, statements, information and data (collectively, the "Information") in this datasheet or other publication are subject to change. The customer is responsible for checking, confirming and verifying the extent to which the Information contained in this datasheet or other publication is applicable to an order at the time the order is placed. All Information given herein is believed to be accurate and reliable, but it is presented without any guarantee, warranty, representation or responsibility of any kind, expressed or implied. Statements of suitability for certain applications are based on the knowledge that the Cornell Dubilier company providing such statements ("Cornell Dubilier") has of operating conditions that such Cornell Dubilier company regards as typical for such applications, but are not intended to constitute any guarantee, warranty or representation regarding any such matter – and Cornell Dubilier specifically and expressly disclaims any guarantee, warranty or representation concerning the suitability for a specific customer application, use, storage, transportation, or operating environment. The Information is intended for use only by customers who have the requisite experience and capability to determine the correct products for their application. Any technical advice inferred from this Information or otherwise provided by Cornell Dubilier with reference to the use of any Cornell Dubilier products is given gratis (unless otherwise specified by Cornell Dubilier), and Cornell Dubilier assumes no obligation or liability for the advice given or results obtained. Although Cornell Dubilier strives to apply the most stringent quality and safety standards regarding the design and manufacturing of its products, in light of the current state of the art, isolated component failures may still occur. Accordingly, customer applications which require a high degree of reliability or safety should employ suitable designs or other safeguards (such as installation of protective circuitry or redundancies or other appropriate protective measures) in order to ensure that the failure of an electrical component does not result in a risk of personal injury or property damage. Although all product-related warnings, cautions and notes must be observed, the customer should not assume that all safety measures are indicated in such warnings, cautions and notes, or that other safety measures may not be required.

LMB

Aluminum Electrolytic Capacitors

105°C Snap-Mount

FEATURES	Multiple Case Sizes - High Voltage – High Current
APPLICATIONS	Filtering – Switching Power Supplies

Operating Temperature Range		**-40°C to +105°C**								**-25°C to +105°C**					
Capacitance Tolerance		**±20% at 120 Hz, 20°C**													
Surge Voltage	**WVDC**	**10**	**16**	**25**	**35**	**50**	**63**	**80**	**100**	**160**	**200**	**250**	**350**	**400**	**450**
	SVDC	13	20	32	44	63	79	100	120	200	250	300	400	450	500
Dissipation Factor	**WVDC**	**10**	**16**	**25**	**35**	**50**	**63**	**80**	**100**	**160**	**200**	**250**	**350**	**400**	**450**
	Tan δ	.55	.5	.45	.4	.35	.3	.25	.2	.15	.15	.15	.25	.25	.25
		For capacitance values above 33000µF The add following to the Dissipation factors values above								(capacitance-33000 µF)*0.1 10000 µF					
Leakage current		**5 Minutes**													
		3√CV or 5000uA,Whichever is less													
Low Temperature Stability Impedance Ratio (120 Hz)	**WVDC**	**10**	**16**	**25**	**35**	**50**	**63**	**80**	**100**	**160**	**200**	**250**	**350**	**400**	**450**
	-25°C to +20°C	6	6	6	6	4	3	3	3	8	8	8	8	8	8
	-40°C to +20°C	15	15	15	15	15	15	15	15	-	-	-	-	-	-
Load Life		**3000 hours at 105°C with rated WVDC and ripple current applied**													
		Capacitance Change	≤20% of initial measured value												
		Dissipation Factor	≤200% of maximum specified value												
		Leakage Current	≤100% of maximum specified value												
Shelf Life		**1000 hours at 85°C with no voltage applied**													
		Capacitance Change	≤20% of initial measured value												
		Dissipation Factor	≤200% of maximum specified value												
		Leakage Current	≤100% of maximum specified value												
Ripple Current Multipliers			**Frequency (Hz)**												
		WVDC	**60**	**120**	**1k**	**10k+**									
		10 to 100	**0.9**	**1**	**1.15**	**1.25**									
		160 to 250	**0.8**	**1**	**1.25**	**1.47**									
		350 to 450	**0.8**	**1**	**1.3**	**1.47**									

Americas / EU
Phone: 1-508-996-8561
Email: cdena@cde.com

CDE ENERGIZING IDEAS
CORNELL DUBILIER
ILLINOIS CAPACITOR

Asia
Phone: 852-2793-0931
Email: cdeasia@cde.com

LMB

Aluminum Electrolytic Capacitors

105°C Snap-Mount

Lead Style Options

Code 2 (standard)

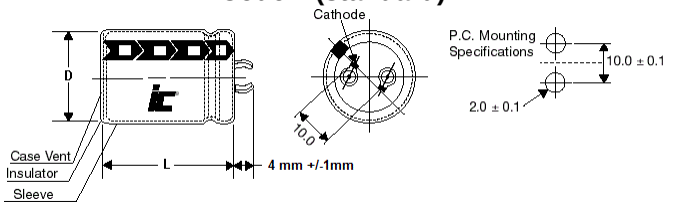

Diameter 20 to 40 mm

Code W

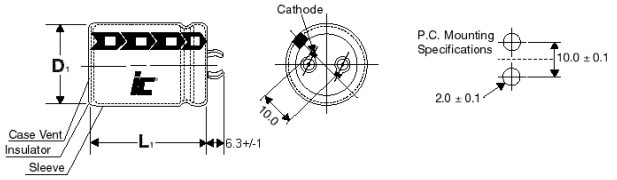

Diameter 20 to 40 mm

Code P

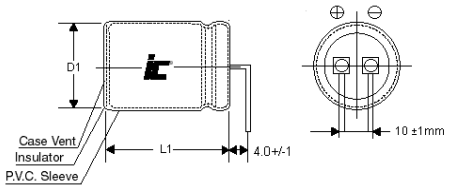

Diameter 22 to 35 mm

Code D

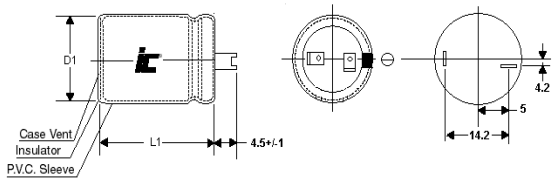

Diameter 30 to 40 mm

Code 9

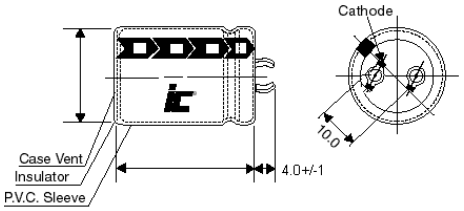

Diameter 25 to 35 mm

Code T

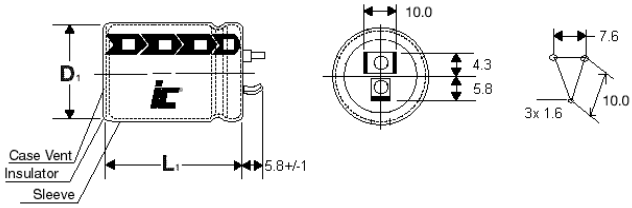

Diameter 25 to 35 mm

Code 4

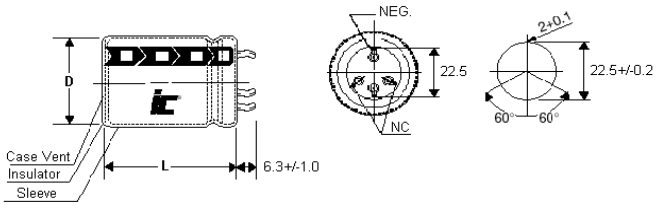

Diameter 35 to 45 mm

Code 4S (straight leads)

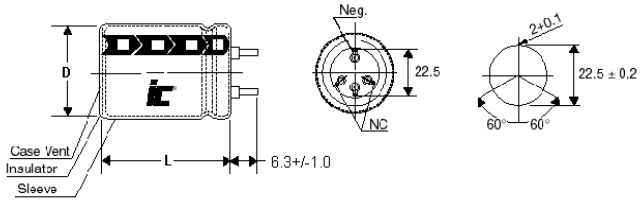

Diameter 35 to 45 mm

Code 5

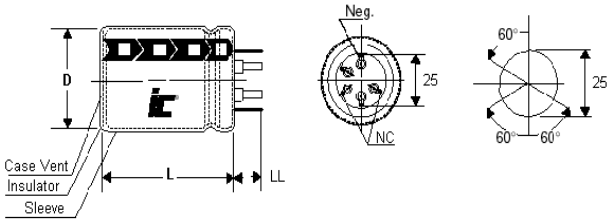

Diameter 40 to 50 mm

Code G

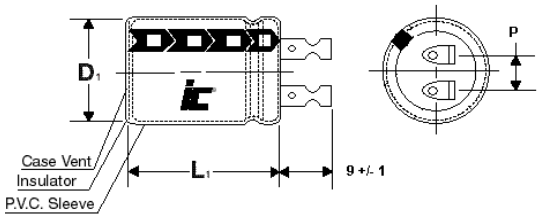

D	35	40	50	63	76
P	14	14	18	25	25

Diameter 35 to 76 mm

Americas / EU
Phone: 1-508-996-8561
Email: cdena@cde.com

CDE CORNELL DUBILIER
ENERGIZING IDEAS
ILLINOIS CAPACITOR

Asia
Phone: 852-2793-0931
Email: cdeasia@cde.com

LMB

+105°C, Extended Life, 3000 hours

WVDC	Capacitance (µF)	IC PART NUMBER	Maximum ESR (mΩ) 120 Hz, +20°C	Maximum RMS Ripple Current (A) 120 Hz, +105°C	Dims DxL (mm)
10	6800	688LMB010M2AC	134.092	1.41	20x25
10	8200	828LMB010M2AD	111.198	1.67	20x30
10	10000	109LMB010M2AD	91.1825	1.88	20x30
10	10000	109LMB010M2BC	91.1825	1.8	22x25
10	12000	129LMB010M2AE	75.9854	2.23	20x35
10	12000	129LMB010M2BD	75.9854	2.2	22x30
10	12000	129LMB010M2CC	75.9854	2.2	25x25
10	15000	159LMB010M2AF	60.7883	2.31	20x40
10	15000	159LMB010M2BE	60.7883	2.3	22x35
10	15000	159LMB010M2CC	60.7883	2.3	25x25
10	18000	189LMB010M2BF	50.657	2.52	22x40
10	18000	189LMB010M2CD	50.657	2.4	25x30
10	18000	189LMB010M2DC	50.657	2.49	30x25
10	22000	229LMB010M2BG	41.4466	2.6	22x45
10	22000	229LMB010M2CE	41.4466	2.6	25x35
10	22000	229LMB010M2DC	41.4466	2.6	30x25
10	27000	279LMB010M2BH	33.7713	3.19	22x50
10	27000	279LMB010M2CF	33.7713	3.1	25x40
10	27000	279LMB010M2DD	33.7713	3.1	30x30
10	33000	339LMB010M2CG	27.6311	3.4	25x45
10	33000	339LMB010M2DE	27.6311	3.4	30x35
10	33000	339LMB010M2ED	27.6311	3.4	35x30
10	39000	399LMB010M2DF	25.1192	3.79	30x40
10	39000	399LMB010M2ED	25.1192	3.7	35x30
10	47000	479LMB010M2DG	24.3389	4.26	30x45
10	47000	479LMB010M2EE	24.3389	4.2	35x35
10	56000	569LMB010M2EF	23.0917	5	35x40
16	5600	568LMB016M2AC	148.024	1.89	20x25
16	6800	688LMB016M2AD	121.902	2.25	20x30
16	6800	688LMB016M2BC	121.902	1.74	22x25
16	6800	688LMB016M2CD	121.902	1.67	25x30
16	8200	828LMB016M2AE	101.089	2.43	20x35
16	8200	828LMB016M2BD	101.089	2.4	22x30
16	10000	109LMB016M2AF	82.8932	2.79	20x40
16	10000	109LMB016M2BD	82.8932	2.09	22x30
16	10000	109LMB016M2CC	82.8932	2.05	25x25
16	12000	129LMB016M2BE	69.0777	2.9	22x35
16	12000	129LMB016M2CD	69.0777	2.9	25x30
16	15000	159LMB016M2BF	55.2621	3.2	22x40
16	15000	159LMB016M2CE	55.2621	2.6	25x35
16	18000	189LMB016M2BG	46.0518	3.5	22x45
16	18000	189LMB016M2CF	46.0518	3.5	25x40
16	18000	189LMB016M2DD	46.0518	3.5	30x30
16	22000	229LMB016M2CG	37.6787	3.8	25x45
16	22000	229LMB016M2DD	37.6787	3.8	30x30
16	22000	229LMB016M2DE	37.6787	3.35	30x35
16	22000	229LMB016M2ED	37.6787	3.2	35x30
16	27000	279LMB016M2CH	30.7012	4.2	25x50
16	27000	279LMB016M2DE	30.7012	4.2	30x35
16	27000	279LMB016M2ED	30.7012	4.2	35x30
16	33000	339LMB016M2DF	25.1192	4.7	30x40
16	33000	339LMB016M2EE	25.1192	4.21	35x35
16	39000	399LMB016M2DG	23.8052	4.9	30x45
16	39000	399LMB016M2EF	23.8052	5.1	35x40
16	47000	479LMB016M2DH	22.5752	5.27	30x50
16	47000	479LMB016M2EG	22.5752	5.5	35x45
25	3300	338LMB025M2BC	200.953	1.34	22x25
25	3900	398LMB025M2AC	191.292	1.72	20x25

WVDC	Capacitance (µF)	IC PART NUMBER	Maximum ESR (mΩ) 120 Hz, +20°C	Maximum RMS Ripple Current (A) 120 Hz, +105°C	Dims DxL (mm)
25	4700	478LMB025M2AD	158.732	2.04	20x30
25	4700	478LMB025M2BC	158.732	1.58	22x25
25	4700	478LMB025M2CC	158.732	1.51	25x25
25	5600	568LMB025M2AE	133.221	2.23	20x35
25	5600	568LMB025M2BD	133.221	2.2	22x30
25	6800	688LMB025M2AF	109.712	2.72	20x40
25	6800	688LMB025M2BD	109.712	1.85	22x30
25	6800	688LMB025M2CC	109.712	1.88	25x25
25	6800	688LMB025M2DC	109.712	1.75	30x25
25	8200	828LMB025M2BE	90.9803	2.7	22x35
25	8200	828LMB025M2CD	90.9803	2.7	25x30
25	8200	828LMB025M2DC	90.9803	2.7	30x25
25	10000	109LMB025M2BF	74.6039	2.6	22x40
25	10000	109LMB025M2CE	74.6039	2.55	25x35
25	10000	109LMB025M2DD	74.6039	2.6	30x30
25	10000	109LMB025M2EC	74.6039	2.15	35x25
25	12000	129LMB025M2BG	62.1699	3.2	22x45
25	12000	129LMB025M2CF	62.1699	3.2	25x40
25	12000	129LMB025M2DD	62.1699	3.2	30x30
25	15000	159LMB025M2CG	49.7359	3.25	25x45
25	15000	159LMB025M2DE	49.7359	3.1	30x35
25	15000	159LMB025M2ED	49.7359	3.25	35x30
25	18000	189LMB025M2DF	41.4466	3.9	30x40
25	18000	189LMB025M2ED	41.4466	3.9	35x30
25	22000	229LMB025M2DG	33.9109	2.44	30x45
25	22000	229LMB025M2EE	33.9109	3.95	35x35
25	27000	279LMB025M2EE	27.6311	4.8	35x35
25	33000	339LMB025M2EH	22.6072	5.47	35x50
35	2200	228LMB035M2BC	263.751	1.17	22x25
35	2700	278LMB035M2AC	245.61	1.62	20x25
35	3300	338LMB035M2AD	200.953	1.94	20x30
35	3300	338LMB035M2BC	200.953	1.43	22x25
35	3300	338LMB035M2CC	200.953	1.36	25x25
35	3900	398LMB035M2AE	170.037	2.02	20x35
35	3900	398LMB035M2BD	170.037	2	22x30
35	4700	478LMB035M2AF	141.095	2.21	20x40
35	4700	478LMB035M2BE	141.095	2	22x35
35	4700	478LMB035M2CC	141.095	1.73	25x25
35	4700	478LMB035M2DC	141.095	1.56	30x25
35	5600	568LMB035M2BE	118.419	2.4	22x35
35	5600	568LMB035M2CD	118.419	2.4	25x30
35	6800	688LMB035M2BF	97.5214	2.35	22x40
35	6800	688LMB035M2CE	97.5214	2.6	25x35
35	6800	688LMB035M2DC	97.5214	2.78	30x25
35	6800	688LMB035M2DD	97.5214	2.3	30x30
35	6800	688LMB035M2EC	97.5214	1.96	35x25
35	8200	828LMB035M2BH	80.8714	2.9	22x50
35	8200	828LMB035M2CF	80.8714	2.9	25x40
35	8200	828LMB035M2DD	80.8714	2.9	30x30
35	10000	109LMB035M2CG	66.3146	3	25x45
35	10000	109LMB035M2DE	66.3146	2.95	30x35
35	10000	109LMB035M2ED	66.3146	2.2	35x30
35	12000	129LMB035M2CH	55.2621	3.5	25x50
35	12000	129LMB035M2DF	55.2621	3.5	30x40
35	12000	129LMB035M2ED	55.2621	3.5	35x30
35	15000	159LMB035M2DG	44.2097	3.7	30x45
35	15000	159LMB035M2EE	44.2097	3.9	35x35
35	15000	159LMB035M2EF	44.2097	3.65	35x40

Americas / EU
Phone: 1-508-996-8561
Email: cdena@cde.com

CORNELL DUBILIER
ENERGIZING IDEAS
ILLINOIS CAPACITOR

Asia
Phone: 852-2793-0931
Email: cdeasia@cde.com

LMB

+105°C, Extended Life, 3000 hours

WVDC	Capacitance (µF)	IC PART NUMBER	Maximum ESR (mΩ) 120 Hz, +20°C	Maximum RMS Ripple Current (A) 120 Hz, +105°C	Dims DxL (mm)
35	18000	189LMB035M2EF	36.8414	4.51	35x40
35	22000	229LMB035M2EG	30.143	5.24	35x45
50	1500	158LMB050M2AC	386.835	1.29	20x25
50	1500	158LMB050M2BC	386.835	1.05	22x25
50	1800	188LMB050M2AD	322.362	1.53	20x30
50	1800	188LMB050M2BC	322.362	1.5	22x25
50	2200	228LMB050M2AE	263.751	1.72	20x35
50	2200	228LMB050M2BD	263.751	1.31	22x30
50	2200	228LMB050M2CC	263.751	1.25	25x25
50	2700	278LMB050M2AE	214.908	1.82	20x35
50	2700	278LMB050M2BD	214.908	1.8	22x30
50	2700	278LMB050M2CC	214.908	1.8	25x25
50	3300	338LMB050M2AF	175.834	2.01	20x40
50	3300	338LMB050M2BE	175.834	1.94	22x35
50	3300	338LMB050M2CD	175.834	1.98	25x30
50	3300	338LMB050M2DC	175.834	1.5	30x25
50	3900	398LMB050M2BF	148.783	2.23	22x40
50	3900	398LMB050M2CD	148.783	2.2	25x30
50	3900	398LMB050M2DC	148.783	2.2	30x25
50	4700	478LMB050M2BG	123.458	2.54	22x45
50	4700	478LMB050M2CE	123.458	2.58	25x35
50	4700	478LMB050M2DD	123.458	2.53	30x30
50	4700	478LMB050M2EC	123.458	1.86	35x25
50	5600	568LMB050M2BH	103.617	2.8	22x50
50	5600	568LMB050M2CF	103.617	2.8	25x40
50	5600	568LMB050M2DD	103.617	2.76	30x30
50	6800	688LMB050M2CG	85.3312	3.32	25x45
50	6800	688LMB050M2DE	85.3312	3.34	30x35
50	6800	688LMB050M2ED	85.3312	3.25	35x30
50	8200	828LMB050M2DF	70.7625	3.71	30x40
50	8200	828LMB050M2EE	70.7625	3.85	35x35
50	10000	109LMB050M2DG	58.0252	4.04	30x45
50	10000	109LMB050M2DH	58.0252	4.51	30x50
50	10000	109LMB050M2EF	58.0252	4.02	35x40
50	12000	129LMB050M2EG	48.3544	4.56	35x45
50	15000	159LMB050M2EH	38.6835	4.73	35x50
63	1000	108LMB063M2AC	497.359	1.21	20x25
63	1000	108LMB063M2BC	414.466	0.91	22x25
63	1200	128LMB063M2AD	414.466	1.43	20x30
63	1200	128LMB063M2BC	414.466	1.4	22x25
63	1500	158LMB063M2AE	331.573	1.52	20x35
63	1500	158LMB063M2BD	331.573	1.43	22x30
63	1500	158LMB063M2CC	331.573	1.42	25x25
63	1800	188LMB063M2AE	276.311	1.72	20x35
63	1800	188LMB063M2BD	276.311	1.7	22x30
63	1800	188LMB063M2CC	276.311	1.7	25x25
63	2200	228LMB063M2BE	226.072	1.8	22x35
63	2200	228LMB063M2BF	226.072	2.01	22x40
63	2200	228LMB063M2CD	226.072	1.35	25x30
63	2200	228LMB063M2CE	226.072	2	25x35
63	2200	228LMB063M2DC	226.072	1.73	30x25
63	2700	278LMB063M2BF	184.207	2.2	22x40
63	2700	278LMB063M2CE	184.207	2.2	25x35
63	2700	278LMB063M2DC	184.207	2.2	30x25
63	3300	338LMB063M2BG	150.715	2.31	22x45
63	3300	338LMB063M2CE	150.715	2.23	25x35
63	3300	338LMB063M2DD	150.715	2.19	30x30
63	3300	338LMB063M2EC	150.715	1.73	35x25

WVDC	Capacitance (µF)	IC PART NUMBER	Maximum ESR (mΩ) 120 Hz, +20°C	Maximum RMS Ripple Current (A) 120 Hz, +105°C	Dims DxL (mm)
63	3900	398LMB063M2CF	127.528	2.57	25x40
63	3900	398LMB063M2DE	127.528	2.7	30x35
63	4700	478LMB063M2CH	105.821	2.93	25x50
63	4700	478LMB063M2DE	105.821	2.9	30x35
63	4700	478LMB063M2DF	105.821	3	30x40
63	4700	478LMB063M2ED	105.821	2.81	35x30
63	5600	568LMB063M2DF	88.8141	3.22	30x40
63	5600	568LMB063M2EE	88.8141	3.3	35x35
63	6800	688LMB063M2DG	73.1411	3.71	30x45
63	6800	688LMB063M2DH	73.1411	3.86	30x50
63	6800	688LMB063M2EF	73.1411	3.68	35x40
63	8200	828LMB063M2EG	60.6536	4.43	35x45
63	10000	109LMB063M2EH	49.7359	4.64	35x50
80	820	827LMB080M2BC	05.446	1.04	22x25
80	1000	108LMB080M2AD	414.466	1.24	20x30
80	1000	108LMB080M2BC	414.466	1.2	22x25
80	1000	108LMB080M2CC	414.466	0.99	25x25
80	1200	128LMB080M2BD	345.388	1.5	22x30
80	1200	128LMB080M2CC	345.388	1.43	25x25
80	1500	158LMB080M2AE	276.311	1.57	20x35
80	1500	158LMB080M2BD	276.311	1.59	22x30
80	1500	158LMB080M2BE	276.311	1.6	22x35
80	1500	158LMB080M2CC	276.311	1.59	25x25
80	1500	158LMB080M2CD	276.311	1.63	25x30
80	1500	158LMB080M2DC	276.311	1.21	30x25
80	1800	188LMB080M2AF	230.259	1.77	20x40
80	1800	188LMB080M2BE	230.259	1.79	22x35
80	1800	188LMB080M2CD	230.259	1.71	25x30
80	2200	228LMB080M2BF	188.394	2.03	22x40
80	2200	228LMB080M2BH	188.394	2.04	22x50
80	2200	228LMB080M2CE	188.394	1.98	25x35
80	2200	228LMB080M2DC	188.394	1.98	30x25
80	2200	228LMB080M2DD	188.394	2.05	30x30
80	2200	228LMB080M2EC	188.394	1.61	35x25
80	2700	278LMB080M2BG	153.506	2.39	22x45
80	2700	278LMB080M2CF	153.506	2.35	25x40
80	2700	278LMB080M2DD	153.506	2.35	30x30
80	3300	338LMB080M2CG	125.596	2.74	25x45
80	3300	338LMB080M2DE	125.596	2.75	30x35
80	3300	338LMB080M2ED	125.596	2.7	35x30
80	3900	398LMB080M2CH	106.273	2.92	25x50
80	3900	398LMB080M2DF	106.273	2.82	30x40
80	3900	398LMB080M2ED	106.273	2.97	35x30
80	4700	478LMB080M2DG	88.1843	3.34	30x45
80	4700	478LMB080M2DH	88.1843	3.5	30x50
80	4700	478LMB080M2EE	88.1843	3.38	35x35
80	4700	478LMB080M2EF	88.1843	3.5	35x40
80	5600	568LMB080M2DH	74.0118	3.8	30x50
80	5600	568LMB080M2EF	74.0118	3.8	35x40
80	6800	688LMB080M2EG	60.9509	3.9	35x45
80	6800	688LMB080M2EH	60.9509	4.12	35x50
80	8200	828LMB080M2EH	50.5446	4.2	35x50
100	560	567LMB100M2AC	740.118	0.95	20x25
100	680	687LMB100M2AD	487.607	1.15	20x30
100	680	687LMB100M2BC	487.607	1.09	22x25
100	820	827LMB100M2AE	404.357	1.31	20x35
100	820	827LMB100M2BD	404.357	1.4	22x30
100	1000	108LMB100M2AE	331.573	1.43	20x35

Americas / EU
Phone: 1-508-996-8561
Email: cdena@cde.com

CDE CORNELL DUBILIER
ENERGIZING IDEAS
ILLINOIS CAPACITOR

Asia
Phone: 852-2793-0931
Email: cdeasia@cde.com

LMB

+105°C, Extended Life, 3000 hours

WVDC	Capacitance (µF)	IC PART NUMBER	Maximum ESR (mΩ) 120 Hz, +20°C	Maximum RMS Ripple Current (A) 120 Hz, +105°C	Dims DxL (mm)
100	1000	108LMB100M2BD	331.573	1.51	22x30
100	1000	108LMB100M2CC	331.573	1.55	25x25
100	1200	128LMB100M2AF	276.311	1.61	20x40
100	1200	128LMB100M2BE	276.311	1.69	22x35
100	1200	128LMB100M2CD	276.311	1.68	25x30
100	1500	158LMB100M2BF	221.048	1.94	22x40
100	1500	158LMB100M2CE	221.048	2.01	25x35
100	1500	158LMB100M2DC	221.048	1.98	30x25
100	1800	188LMB100M2BG	184.207	2.23	22x45
100	1800	188LMB100M2CF	184.207	2.2	25x40
100	1800	188LMB100M2DD	184.207	2.2	30x30
100	2200	228LMB100M2CG	150.715	2.55	25x45
100	2200	228LMB100M2DE	150.715	2.56	30x35
100	2200	228LMB100M2ED	150.715	2.6	35x30
100	2700	278LMB100M2CH	122.805	2.82	25x50
100	2700	278LMB100M2DF	122.805	2.86	30x40
100	2700	278LMB100M2EE	122.805	2.9	35x35
100	3300	338LMB100M2DG	100.477	3.3	30x45
100	3300	338LMB100M2EE	100.477	3.28	35x35
100	3900	398LMB100M2DH	85.0187	3.6	30x50
100	3900	398LMB100M2EF	85.0187	3.67	35x40
100	4700	478LMB100M2EG	70.5475	4.12	35x45
100	5600	568LMB100M2EH	59.2094	4.05	35x50
160	270	277LMB160M2AC	921.036	1.1	20x25
160	330	337LMB160M2AD	753.574	1.2	20x30
160	330	337LMB160M2BC	753.574	1.16	22x25
160	390	397LMB160M2AE	637.64	1.42	20x35
160	390	397LMB160M2BD	637.64	1.27	22x30
160	390	397LMB160M2CC	637.64	1.03	25x25
160	470	477LMB160M2AF	529.106	1.34	20x40
160	470	477LMB160M2BD	529.106	1.51	22x30
160	470	477LMB160M2CC	529.106	1.5	25x25
160	560	567LMB160M2BE	444.071	1.66	22x35
160	560	567LMB160M2CD	444.071	1.65	25x30
160	560	567LMB160M2DC	444.071	1.66	30x25
160	680	687LMB160M2BF	365.705	1.8	22x40
160	680	687LMB160M2CE	365.705	2	25x35
160	680	687LMB160M2DC	365.705	1.82	30x25
160	820	827LMB160M2BG	303.268	2.02	22x45
160	820	827LMB160M2CE	303.268	2	25x35
160	820	827LMB160M2CF	303.268	2.04	25x40
160	820	827LMB160M2DD	303.268	2.03	30x30
160	820	827LMB160M2EC	303.268	2	35x25
160	1000	108LMB160M2CG	248.68	2.22	25x45
160	1000	108LMB160M2DE	248.68	2.21	30x35
160	1000	108LMB160M2EC	248.68	2.24	35x25
160	1200	128LMB160M2CH	207.233	2.43	25x50
160	1200	128LMB160M2DE	207.233	2.4	30x35
160	1200	128LMB160M2DF	207.233	2.49	30x40
160	1200	128LMB160M2ED	207.233	2.41	35x30
160	1500	158LMB160M2DG	165.786	2.88	30x45
160	1500	158LMB160M2EE	165.786	2.84	35x35
160	1800	188LMB160M2DH	138.155	3.32	30x50
160	1800	188LMB160M2EF	138.155	3.28	35x40
160	1800	188LMB160M2EG	138.155	3	35x45
160	2200	228LMB160M2EG	113.036	3.5	35x45
200	220	227LMB200M2AC	1130.36	1	20x25
200	220	227LMB200M2BC	1130.36	0.97	22x25

WVDC	Capacitance (µF)	IC PART NUMBER	Maximum ESR (mΩ) 120 Hz, +20°C	Maximum RMS Ripple Current (A) 120 Hz, +105°C	Dims DxL (mm)
200	270	277LMB200M2AD	921.036	1.1	20x30
200	270	277LMB200M2BC	921.036	1.04	22x25
200	330	337LMB200M2AE	753.574	1.2	20x35
200	330	337LMB200M2BD	753.574	1.21	22x30
200	330	337LMB200M2CC	753.574	1.44	25x25
200	390	397LMB200M2AF	637.64	1.31	20x40
200	390	397LMB200M2BE	637.64	1.31	22x35
200	390	397LMB200M2CC	637.64	1.29	25x25
200	390	397LMB200M2CD	637.64	1.35	25x30
200	470	477LMB200M2BF	529.106	1.52	22x40
200	470	477LMB200M2CD	529.106	1.45	25x30
200	470	477LMB200M2DC	529.106	1.5	30x25
200	560	567LMB200M2BF	444.071	1.7	22x40
200	560	567LMB200M2BG	444.071	1.67	22x45
200	560	567LMB200M2CE	444.071	1.68	25x35
200	560	567LMB200M2DC	444.071	1.67	30x25
200	560	567LMB200M2DD	444.071	1.7	30x30
200	680	687LMB200M2BG	365.705	1.82	22x45
200	680	687LMB200M2BH	365.705	1.75	22x50
200	680	687LMB200M2CE	365.705	1.79	25x35
200	680	687LMB200M2CF	365.705	1.82	25x40
200	680	687LMB200M2DD	365.705	1.84	30x30
200	680	687LMB200M2EC	365.705	1.8	35x25
200	820	827LMB200M2CG	303.268	2.07	25x45
200	820	827LMB200M2DD	303.268	2.05	30x30
200	820	827LMB200M2DE	303.268	2.04	30x35
200	820	827LMB200M2ED	303.268	2.15	35x30
200	1000	108LMB200M2CH	248.68	2.53	25x50
200	1000	108LMB200M2DE	248.68	2.4	30x35
200	1000	108LMB200M2DF	248.68	2.3	30x40
200	1000	108LMB200M2ED	248.68	2.58	35x30
200	1000	108LMB200M2EE	248.68	2.3	35x35
200	1200	128LMB200M2DG	207.233	2.65	30x45
200	1200	128LMB200M2EE	207.233	2.85	35x35
200	1500	158LMB200M2EF	165.786	3.08	35x40
200	1500	158LMB200M2EG	165.786	3.25	35x45
200	1800	188LMB200M2EG	138.155	3.48	35x45
200	1800	188LMB200M2EH	138.155	3.68	35x50
250	150	157LMB250M2AC	1657.86	0.79	20x25
250	180	187LMB250M2AD	1381.55	0.9	20x30
250	180	187LMB250M2BC	1381.55	0.88	22x25
250	220	227LMB250M2AE	1130.36	1	20x35
250	220	227LMB250M2BC	753.6	0.94	22x25
250	220	227LMB250M2BD	1130.36	1	22x30
250	220	227LMB250M2CC	1130.36	0.91	25x25
250	270	277LMB250M2AF	921.036	1.1	20x40
250	270	277LMB250M2BE	921.036	1.13	22x35
250	270	277LMB250M2CC	921.036	1.11	25x25
250	270	277LMB250M2CD	921.036	1.27	25x30
250	330	337LMB250M2BE	753.574	1.23	22x35
250	330	337LMB250M2BF	753.574	1.3	22x40
250	330	337LMB250M2CD	753.574	1.28	25x30
250	330	337LMB250M2DC	753.574	1.24	30x25
250	390	397LMB250M2BF	637.64	1.47	22x40
250	390	397LMB250M2BG	637.64	1.49	22x45
250	390	397LMB250M2CE	637.64	1.46	25x35
250	390	397LMB250M2DC	637.64	1.48	30x25
250	390	397LMB250M2DD	637.64	1.49	30x30

Americas / EU
Phone: 1-508-996-8561
Email: cdena@cde.com

CDE ENERGIZING IDEAS
CORNELL DUBILIER
ILLINOIS CAPACITOR

Asia
Phone: 852-2793-0931
Email: cdeasia@cde.com

LMB

+105°C, Extended Life, 3000 hours

WVDC	Capacitance (µF)	IC PART NUMBER	Maximum ESR (mΩ) 120 Hz, +20°C	Maximum RMS Ripple Current (A) 120 Hz, +105°C	Dims DxL (mm)
250	470	477LMB250M2BH	529.106	1.66	22x50
250	470	477LMB250M2CF	529.106	1.61	25x40
250	470	477LMB250M2DD	529.106	1.59	30x30
250	470	477LMB250M2EC	529.106	1.63	35x25
250	560	567LMB250M2CG	444.071	1.85	25x45
250	560	567LMB250M2DE	444.071	1.85	30x35
250	560	567LMB250M2EC	444.07	1.78	35x25
250	680	687LMB250M2CH	365.705	2.14	25x50
250	680	687LMB250M2DE	365.705	2.04	30x35
250	680	687LMB250M2DF	365.705	2	30x40
250	680	687LMB250M2ED	365.705	2.1	35x30
250	820	827LMB250M2DG	303.268	2.49	30x45
250	820	827LMB250M2EE	303.268	2.45	35x35
250	1000	108LMB250M2DH	248.68	2.7	30x50
250	1000	108LMB250M2EF	248.68	2.56	35x40
250	1200	128LMB250M2EG	207.233	2.85	35x45
250	1500	158LMB250M2EH	165.786	3.28	35x50
350	68	686LMB350M2AC	6095.09	0.47	20x25
350	82	826LMB350M2AD	5054.46	0.54	20x30
350	82	826LMB350M2BC	5054.46	0.43	22x25
350	100	107LMB350M2AD	4144.66	0.6	20x30
350	100	107LMB350M2BC	4144.66	0.69	22x25
350	100	107LMB350M2BD	4144.66	0.51	22x30
350	100	107LMB350M2CC	4144.66	0.51	25x25
350	120	127LMB350M2AE	3453.88	0.68	20x35
350	120	127LMB350M2BD	3453.88	0.55	22x30
350	120	127LMB350M2CC	3453.88	0.55	25x25
350	150	157LMB350M2AF	2763.11	0.78	20x40
350	150	157LMB350M2BE	2763.11	0.66	22x35
350	150	157LMB350M2CD	2763.11	0.67	25x30
350	150	157LMB350M2DC	2763.11	0.69	30x25
350	180	187LMB350M2BF	2302.59	0.77	22x40
350	180	187LMB350M2CD	2302.59	0.92	25x30
350	180	187LMB350M2CE	2302.59	0.78	25x35
350	180	187LMB350M2DC	2302.59	0.9	30x25
350	180	187LMB350M2DD	2302.59	0.82	30x30
350	220	227LMB350M2BG	2302.59	1.05	22x45
350	220	227LMB350M2CE	2302.59	1.04	25x35
350	220	227LMB350M2CF	1130.36	0.91	25x40
350	220	227LMB350M2DD	2302.59	0.9	30x30
350	220	227LMB350M2EC	2302.59	0.92	35x25
350	270	277LMB350M2BH	1535.06	1.16	22x50
350	270	277LMB350M2CF	1535.06	1.18	25x40
350	270	277LMB350M2CG	1535.06	1.07	25x45
350	270	277LMB350M2DD	1535.06	1.17	30x30
350	270	277LMB350M2DE	1535.06	1.06	30x35
350	270	277LMB350M2EC	1535.06	1.17	35x25
350	270	277LMB350M2ED	1535.06	1.1	35x30
350	330	337LMB350M2CG	1255.96	1.29	25x45
350	330	337LMB350M2CH	753.574	1.23	25x50
350	330	337LMB350M2DE	1255.96	1.34	30x35
350	330	337LMB350M2DF	53.57	1.24	30x40
350	330	337LMB350M2ED	1255.96	1.21	35x30
350	390	397LMB350M2CH	1062.73	1.51	25x50
350	390	397LMB350M2DF	1062.73	1.51	30x40
350	390	397LMB350M2DG	637.64	1.42	30x45
350	390	397LMB350M2EE	1062.73	1.4	35x35
350	470	477LMB350M2DG	881.842	1.65	30x45

WVDC	Capacitance (µF)	IC PART NUMBER	Maximum ESR (mΩ) 120 Hz, +20°C	Maximum RMS Ripple Current (A) 120 Hz, +105°C	Dims DxL (mm)
350	470	477LMB350M2EE	881.842	1.69	35x35
350	470	477LMB350M2EF	529.106	1.62	35x40
350	560	567LMB350M2DH	740.118	1.85	30x50
350	560	567LMB350M2ED	740.118	1.91	35x30
350	560	567LMB350M2EF	740.118	1.9	35x40
350	560	567LMB350M2EG	740.118	1.86	35x45
350	680	687LMB350M2EG	609.509	2.2	35x45
400	56	566LMB400M2AC	7401.18	0.51	20x25
400	68	686LMB400M2AD	6095.09	0.56	20x30
400	68	686LMB400M2BC	6095.09	0.53	22x25
400	82	826LMB400M2AD	5054.46	0.64	20x30
400	82	826LMB400M2BC	5054.46	0.64	22x25
400	82	826LMB400M2BD	5054.46	0.56	22x30
400	82	826LMB400M2CC	5054.46	0.56	25x25
400	100	107LMB400M2AE	4144.66	0.7	20x35
400	100	107LMB400M2BD	4144.66	0.68	22x30
400	100	107LMB400M2CC	4144.66	0.68	25x25
400	120	127LMB400M2BE	3453.88	0.72	22x35
400	120	127LMB400M2BF	3453.88	0.75	22x40
400	120	127LMB400M2CC	3453.88	0.73	25x25
400	120	127LMB400M2CD	3453.88	0.76	25x30
400	150	157LMB400M2BF	2763.11	0.85	22x40
400	150	157LMB400M2CD	2763.11	0.85	25x30
400	150	157LMB400M2DC	2763.11	0.9	30x25
400	180	187LMB400M2BG	2302.59	0.98	22x45
400	180	187LMB400M2CE	2302.59	1	25x35
400	180	187LMB400M2DD	2302.59	0.99	30x30
400	180	187LMB400M2EC	2302.59	1.01	35x25
400	220	227LMB400M2BH	2302.59	1.1	22x50
400	220	227LMB400M2CF	2302.59	1.15	25x40
400	220	227LMB400M2DD	2302.59	1.1	30x30
400	220	227LMB400M2EC	2302.59	1.1	35x25
400	270	277LMB400M2CG	1535.06	1.3	25x45
400	270	277LMB400M2CH	1535.06	1.29	25x50
400	270	277LMB400M2DE	1535.06	1.26	30x35
400	270	277LMB400M2ED	1535.06	1.27	35x30
400	330	337LMB400M2DF	753.57	1.5	30x40
400	330	337LMB400M2DG	1255.96	1.55	30x45
400	330	337LMB400M2ED	1255.96	1.5	35x30
400	390	397LMB400M2DG	1062.73	1.6	30x45
400	390	397LMB400M2EE	1062.73	1.7	35x35
400	470	477LMB400M2EF	881.842	2.07	35x40
400	560	567LMB400M2EG	40.118	2.36	35x45
400	680	687LMB400M2EH	609.509	2.4	35x50
450	47	476LMB450M2AC	8818.43	0.39	20x25
450	47	476LMB450M2BC	5291.06	0.39	22x25
450	56	566LMB450M2AD	7401.18	0.46	20x30
450	56	566LMB450M2BC	7401.18	0.5	22x25
450	68	686LMB450M2AE	6095.09	0.56	20x35
450	68	686LMB450M2BD	6095.09	0.54	22x30
450	68	686LMB450M2CC	6095.09	0.5	25x25
450	82	826LMB450M2AE	5054.46	0.64	20x35
450	82	826LMB450M2BD	5054.46	0.64	22x30
450	82	826LMB450M2BE	5054.46	0.61	22x35
450	82	826LMB450M2CC	5054.46	0.64	25x25
450	82	826LMB450M2CD	3032.68	0.6	25x30
450	100	107LMB450M2BC	4144.66	0.69	22x25
450	100	107LMB450M2BE	4144.66	0.69	22x35

Americas / EU
Phone: 1-508-996-8561
Email: cdena@cde.com

CDE CORNELL DUBILIER
ENERGIZING IDEAS
ILLINOIS CAPACITOR

Asia
Phone: 852-2793-0931
Email: cdeasia@cde.com

LMB

+105°C, Extended Life, 3000 hours

WVDC	Capacitance (µF)	IC PART NUMBER	Maximum ESR (mΩ) 120 Hz, +20°C	Maximum RMS Ripple Current (A) 120 Hz, +105°C	Dims DxL (mm)
450	100	107LMB450M2CC	4144.66	0.65	25x25
450	100	107LMB450M2DC	4144.66	0.68	30x25
450	120	127LMB450M2BF	3453.88	0.8	22x40
450	120	127LMB450M2BG	3453.88	0.8	22x45
450	120	127LMB450M2CD	3453.88	0.8	25x30
450	120	127LMB450M2CE	3453.88	0.77	25x35
450	120	127LMB450M2DC	3453.88	0.8	30x25
450	120	127LMB450M2DD	3453.88	0.8	30x30
450	120	127LMB450M2EC	3453.88	0.82	35x25
450	150	157LMB450M2BG	2763.11	0.88	22x45
450	150	157LMB450M2CE	2763.11	0.88	25x35
450	150	157LMB450M2CF	2763.11	0.96	25x40
450	150	157LMB450M2DD	2763.11	0.88	30x30
450	150	157LMB450M2DE	2763.11	0.96	30x35
450	150	157LMB450M2ED	2763.11	0.99	35x30
450	180	187LMB450M2CF	2302.59	1.1	25x40
450	180	187LMB450M2DD	2302.59	1	30x30

WVDC	Capacitance (µF)	IC PART NUMBER	Maximum ESR (mΩ) 120 Hz, +20°C	Maximum RMS Ripple Current (A) 120 Hz, +105°C	Dims DxL (mm)
450	180	187LMB450M2DE	2302.59	1.05	30x35
450	180	187LMB450M2ED	2302.59	1.08	35x30
450	220	227LMB450M2CG	2302.59	1.12	25x45
450	220	227LMB450M2DE	2302.59	1.12	30x35
450	220	227LMB450M2ED	2302.59	1.12	35x30
450	220	227LMB450M2EE	2302.59	1.27	35x35
450	270	277LMB450M2DF	1535.06	1.28	30x40
450	270	277LMB450M2DG	1535.06	1.48	30x45
450	270	277LMB450M2EE	1535.06	1.49	35x35
450	330	337LMB450M2DH	1255.96	1.45	30x50
450	330	337LMB450M2EF	1255.96	1.45	35x40
450	330	337LMB450M2EG	1255.96	1.72	35x45
450	390	397LMB450M2EF	1062.73	1.55	35x40
450	390	397LMB450M2EH	1062.73	1.96	35x50
450	470	477LMB450M2EH	529.11	1.85	35x50
450	560	567LMB450M2EH	740.12	2.15	35x50

LMH

Aluminum Electrolytic Capacitors

+105°C Long Life Snap-Mount

FEATURES	Multiple Case Sizes - High Voltage – High Current
APPLICATIONS	Filtering – Switching Power Supplies

Operating Temperature Range		**-40°C to +105°C (≤250WVDC) -25°C to +105°C (>250WVDC)**													
Capacitance Tolerance		**±20% at 120 Hz, 20°C**													
Surge Voltage	**WVDC**	**10**	**16**	**25**	**35**	**50**	**63**	**80**	**100**	**160**	**200**	**250**	**350**	**400**	**450**
	SVDC	13	20	32	44	63	79	100	120	200	250	300	400	450	500
Dissipation Factor tan δ (120 Hz)	**WVDC**	**10**	**16**	**25**	**35**	**50**	**63**	**80**	**100**	**160**	**200**	**250**	**350**	**400**	**450**
		.55	.5	.45	.4	.35	.3	.25	.2	.15	.15	.15	.15	.15	.15
		For capacitances above 33000uF, add to DF value $\frac{\text{(Capacitance-33000)}}{10000}$ *0.1													
Leakage Current @20°C, Rated WVDC applied		Time			**5 Minutes**										
					3√CV										
Impedance Ratio (120 Hz)	**WVDC**	**10**	**16**	**25**	**35**	**50**	**63**	**80**	**100**	**160**	**200**	**250**	**350**	**400**	**450**
	-25°C/+20°C	4	4	4	4	4	4	4	4	3	3	3	8	8	8
	-40°C/+20°C	15	15	15	15	15	15	15	15	15	15	15	-	-	-
Load Life		**2000 hours with rated voltage and rated ripple current applied at 105°C**													
		Capacitance Change	≤20% of initial measured value												
		Dissipation Factor	≤200% of maximum specified value												
		Leakage Current	≤100% of maximum specified value												
Shelf Life		**1000 hours at 105°C with no voltage applied**													
		Capacitance Change	≤20% of initial measured value												
		Dissipation Factor	≤200% of maximum specified value												
		Leakage Current	≤100% of maximum specified value												
Ripple Current Multipliers		**Frequency (Hz)**							**Temperature (°C)**						
	WVDC	60	120	400	1k	10k	50k		40	60	70	85	105		
	≤100	0.8	1.0	1.1	1.15	1.25	1.25		2.5	2.2	2	1.8	1		
	≥160	0.8	1.0	1.1	1.15	1.47	1.47		2.5	2.2	2	1.8	1		

Americas / EU
Phone: 1-508-996-8561
Email: cdena@cde.com

CDE ENERGIZING IDEAS
CORNELL DUBILIER
ILLINOIS CAPACITOR

Asia
Phone: 852-2793-0931
Email: cdeasia@cde.com

LMH

Aluminum Electrolytic Capacitors

+105°C Long Life Snap-Mount

Lead Style Options

Code Z(standard)

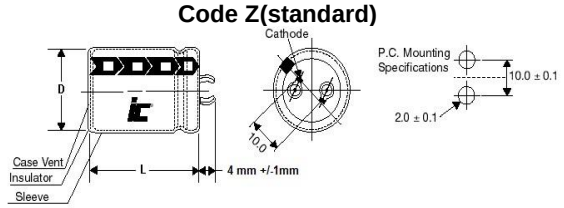

Diameter 20 to 40 mm

Code W

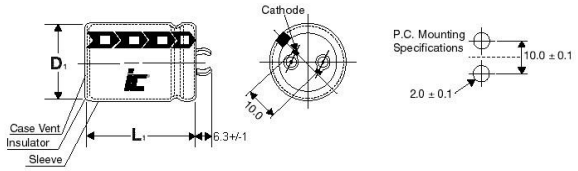

Diameter 20 to 40 mm

Code P

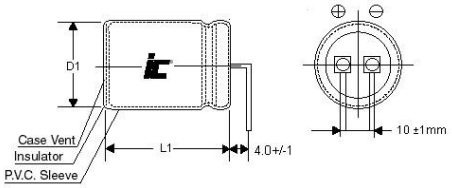

Diameter 22 to 35 mm

Code D

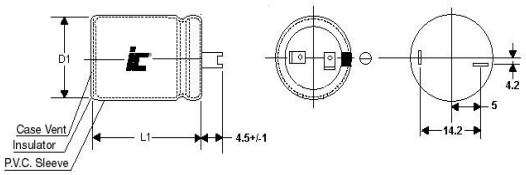

Diameter 30 to 40 mm

Code 9

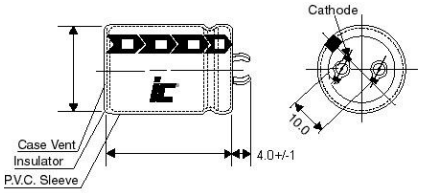

Diameter 25 to 35 mm

Code T

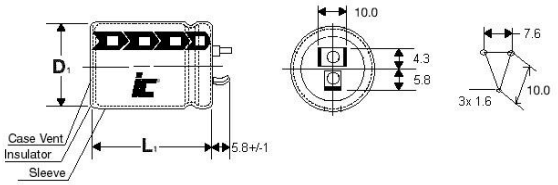

Diameter 25 to 35 mm

Code 4

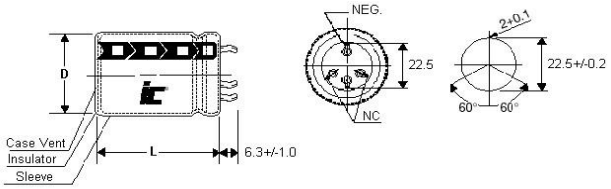

Diameter 35 to 45 mm

Code 4S (straight leads)

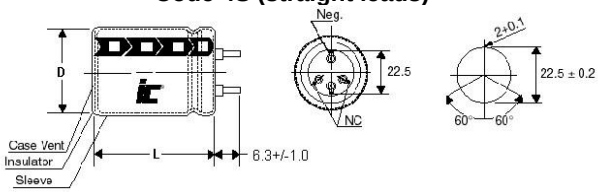

Diameter 35 to 45 mm

Code 5

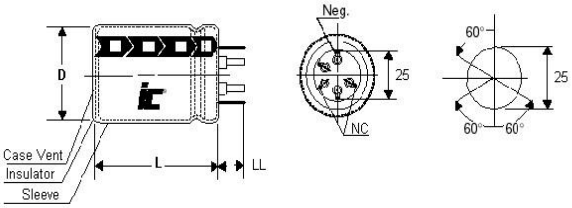

Diameter 40 to 50 mm

Code G

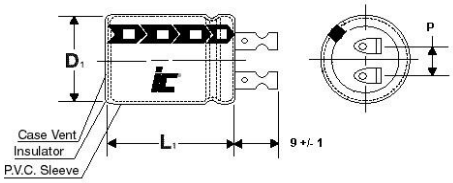

D	35	40	50	63	76
P	14	14	18	25	25

Diameter 35 to 76 mm

Americas / EU
Phone: 1-508-996-8561
Email: cdena@cde.com

CDE ENERGIZING IDEAS
CORNELL DUBILIER
ILLINOIS CAPACITOR

Asia
Phone: 852-2793-0931
Email: cdeasia@cde.com

LMH

+105°C, Standard, 2000 hrs

WVDC	Capacitance (µF)	IC PART NUMBER	Maximum ESR (mΩ) 120 Hz, +20°C	Maximum RMS Ripple Current (A) 120 Hz, +105°C	Dims DxL (mm)
10	12000	129LMH010MZBC	75.99	2.2	22x25
10	15000	159LMH010MZBD	60.79	2.3	22x30
10	18000	189LMH010MZBD	50.657	2.4	22x30
10	18000	189LMH010MZCC	50.657	2.4	25x25
10	22000	229LMH010MZBE	41.45	2.6	22x35
10	22000	229LMH010MZCD	41.45	2.6	25x30
10	27000	279LMH010MZBF	33.77	3.1	22x40
10	27000	279LMH010MZCE	33.77	3.1	25x35
10	33000	339LMH010MZBG	27.63	3.4	22x45
10	33000	339LMH010MZCF	27.63	3.4	25x40
10	39000	399LMH010MZCG	25.93	3.7	25x45
10	39000	399LMH010MZDD	25.93	3.7	30x30
10	39000	399LMH010MZEC	25.93	3.7	35x25
10	47000	479LMH010MZCH	24.34	4.2	25x50
10	47000	479LMH010MZDE	24.34	4.2	30x35
10	47000	479LMH010MZED	24.34	4.2	35x30
10	56000	569LMH010MZDF	23.09	5	30x40
10	56000	569LMH010MZEE	23.09	5	35x35
10	68000	689LMH010MZDG	21.94	5.4	30x45
10	68000	689LMH010MZEF	21.94	5.4	35x40
10	82000	829LMH010MZEG	21.03	5.9	35x45
10	100000	104LMH010MZEH	20.2259	6.5	35x50
16	10000	109LMH016MZBC	82.89	2.6	22x25
16	12000	129LMH016MZBD	69.08	2.9	22x30
16	12000	129LMH016MZCC	69.08	2.9	25x25
16	15000	159LMH016MZBE	55.262	3.2	22x35
16	18000	189LMH016MZBF	46.05	3.5	22x40
16	18000	189LMH016MZCD	46.05	3.5	25x30
16	22000	229LMH016MZBG	37.68	3.8	22x45
16	22000	229LMH016MZCE	37.68	3.8	25x35
16	22000	229LMH016MZDC	37.68	3.8	30x25
16	27000	279LMH016MZBH	30.7	4.2	22x50
16	27000	279LMH016MZCF	30.7	4.2	25x40
16	27000	279LMH016MZDD	30.7	4.2	30x30
16	27000	279LMH016MZEC	30.7	4.2	35x25
16	33000	339LMH016MZCG	25.12	4.7	25x45
16	33000	339LMH016MZDE	25.12	4.7	30x35
16	39000	399LMH016MZDF	21.26	5.1	30x40
16	39000	399LMH016MZED	21.26	5.1	35x30
16	47000	479LMH016MZDG	22.58	5.5	30x45
16	47000	479LMH016MZEE	22.58	5.5	35x35
16	56000	569LMH016MZDH	21.61	6	30x50
16	56000	569LMH016MZEH	21.61	6	35x50
16	68000	689LMH016MZEG	20.72	6.4	35x45
25	6800	688LMH025MZBC	109.71	2.4	22x25
25	8200	828LMH025MZBD	109.71	2.7	22x30
25	8200	828LMH025MZCC	109.71	2.7	25x25
25	10000	109LMH025MZBE	74.6	3	22x35
25	12000	129LMH025MZBF	62.17	3.2	22x40
25	12000	129LMH025MZCD	62.17	3.2	25x30
25	15000	159LMH025MZBG	49.74	3.6	22x45
25	15000	159LMH025MZCE	49.74	3.6	25x35
25	15000	159LMH025MZDC	49.74	3.6	30x25
25	18000	189LMH025MZBH	41.45	3.9	22x50
25	18000	189LMH025MZCF	41.45	3.9	25x40
25	18000	189LMH025MZDD	41.45	3.9	30x30
25	18000	189LMH025MZEC	41.45	3.9	35x25
25	22000	229LMH025MZCG	33.91	4.3	25x45

WVDC	Capacitance (µF)	IC PART NUMBER	Maximum ESR (mΩ) 120 Hz, +20°C	Maximum RMS Ripple Current (A) 120 Hz, +105°C	Dims DxL (mm)
25	22000	229LMH025MZDE	33.91	4.3	30x35
25	22000	229LMH025MZED	33.91	4.3	35x30
25	27000	279LMH025MZDF	27.63	4.8	30x40
25	27000	279LMH025MZEE	27.63	4.8	35x35
25	33000	339LMH025MZDG	22.61	5.5	30x45
25	33000	339LMH025MZEF	22.61	5.5	35x40
25	39000	399LMH025MZDH	19.13	5.8	30x50
25	39000	399LMH025MZEG	19.13	5.8	35x45
25	47000	479LMH025MZEH	20.81	6.3	35x50
35	4700	478LMH035MZBC	141.1	2.2	22x25
35	5600	568LMH035MZBD	118.42	2.4	22x30
35	5600	568LMH035MZCC	118.42	2.4	25x25
35	6800	688LMH035MZBE	97.52	2.6	22x35
35	8200	828LMH035MZBF	97.52	2.9	22x40
35	8200	828LMH035MZCD	97.52	2.9	25x30
35	10000	109LMH035MZBG	66.32	3.2	22x45
35	10000	109LMH035MZCE	66.32	3.2	25x35
35	10000	109LMH035MZDC	66.32	3.2	30x25
35	12000	129LMH035MZBH	55.26	3.5	22x50
35	12000	129LMH035MZCF	55.26	3.5	25x40
35	12000	129LMH035MZDD	55.26	3.5	30x30
35	12000	129LMH035MZEC	55.26	3.5	35x25
35	15000	159LMH035MZCG	44.21	3.9	25x45
35	15000	159LMH035MZDE	44.21	3.9	30x35
35	15000	159LMH035MZED	44.21	3.9	35x30
35	18000	189LMH035MZDF	36.84	4.3	30x40
35	18000	189LMH035MZEE	36.84	4.3	35x35
35	22000	229LMH035MZDG	30.14	5	30x45
35	22000	229LMH035MZEF	30.14	5	35x40
35	27000	279LMH035MZEG	24.56	5.3	35x45
35	33000	339LMH035MZEH	20.1	5.9	35x50
50	2700	278LMH050MZBC	214.91	1.8	22x25
50	3300	338LMH050MZBD	175.83	2	22x30
50	3900	398LMH050MZBE	148.78	2.2	22x35
50	3900	398LMH050MZCC	148.78	2.2	25x25
50	4700	478LMH050MZBF	123.46	2.5	22x40
50	4700	478LMH050MZCD	123.46	2.5	25x30
50	5600	568LMH050MZBG	103.62	2.8	22x45
50	5600	568LMH050MZCE	103.62	2.8	25x35
50	5600	568LMH050MZD	103.62	2.8	30x25
50	6800	688LMH050MZBH	85.33	3.3	22x50
50	6800	688LMH050MZCF	85.33	3.3	25x40
50	6800	688LMH050MZDD	85.33	3.3	30x30
50	6800	688LMH050MZEC	85.33	3.3	35x25
50	8200	828LMH050MZCG	85.33	3.6	25x45
50	8200	828LMH050MZDE	85.33	3.6	30x35
50	10000	109LMH050MZCH	58.03	4	25x50
50	10000	109LMH050MZDF	58.03	4	30x40
50	10000	109LMH050MZED	58.03	4	35x30
50	12000	129LMH050MZDG	48.35	4.5	30x45
50	12000	129LMH050MZEE	48.35	4.5	35x35
50	15000	159LMH050MZDH	38.68	4.8	30x50
50	15000	159LMH050MZEF	38.68	4.8	35x40
50	18000	189LMH050MZEG	32.24	5.2	35x45
63	2200	228LMH063MZBC	226.07	2	22x25
63	2700	278LMH063MZBD	184.207	2.2	22x30
63	2700	278LMH063MZCC	184.207	2.2	25x25
63	3300	338LMH063MZBE	153.51	2.5	22x35

Americas / EU
Phone: 1-508-996-8561
Email: cdena@cde.com

CDE CORNELL DUBILIER
ENERGIZING IDEAS
ILLINOIS CAPACITOR

Asia
Phone: 852-2793-0931
Email: cdeasia@cde.com

LMH

+105°C, Standard, 2000 hrs

WVDC	(µF) Capacitance	IC PART NUMBER	Maximum ESR (mΩ) 120 Hz, +20°C	Maximum RMS Ripple Current (A) 120 Hz, +105°C	Dims DxL (mm)
63	3900	398LMH063MZBF	127.528	2.7	22x40
63	3900	398LMH063MZCD	127.528	2.7	25x30
63	3900	398LMH063MZDC	127.528	2.7	30x25
63	4700	478LMH063MZBG	105.82	3	22x45
63	4700	478LMH063MZCE	105.82	3	25x35
63	5600	568LMH063MZBH	88.81	3.3	22x50
63	5600	568LMH063MZCF	88.81	3.3	25x40
63	5600	568LMH063MZDD	88.81	3.3	30x30
63	5600	568LMH063MZEC	88.81	3.3	35x25
63	6800	688LMH063MZCG	73.14	3.6	25x45
63	6800	688LMH063MZDE	73.14	3.6	30x35
63	6800	688LMH063MZED	73.14	3.6	35x30
63	8200	828LMH063MZDF	73.14	3.9	30x40
63	8200	828LMH063MZEE	73.14	3.9	35x35
63	10000	109LMH063MZDG	49.74	4.4	30x45
63	10000	109LMH063MZEF	49.74	4.4	35x40
63	12000	129LMH063MZEG	365.71	4.8	35x45
63	15000	159LMH063MZEH	188.39	5.4	35x50
80	1200	128LMH080MZBC	365.71	1.5	22x25
80	1500	158LMH080MZBD	276.21	1.7	22x30
80	1500	158LMH080MZCC	276.21	1.7	25x25
80	1800	188LMH080MZBE	230.26	1.8	22x35
80	2200	228LMH080MZBF	188.394	2.1	22x40
80	2200	228LMH080MZCD	188.394	2.1	25x30
80	2700	278LMH080MZBG	92.104	2.4	22x45
80	2700	278LMH080MZCE	154.51	2.4	25x35
80	2700	278LMH080MZDC	154.51	2.4	30x25
80	3300	338LMH080MZBH	153.51	2.6	22x50
80	3300	338LMH080MZCF	153.51	2.6	25x40
80	3300	338LMH080MZDD	153.51	2.6	30x30
80	3300	338LMH080MZEC	153.51	2.6	35x25
80	3900	398LMH080MZCG	106.27	3	25x45
80	3900	398LMH080MZDE	106.27	3	30x35
80	4700	478LMH080MZCH	141.1	3.3	25x50
80	4700	478LMH080MZDF	88.184	3.3	30x40
80	4700	478LMH080MZED	88.184	3.3	35x30
80	5600	568LMH080MZDG	74.01	3.7	30x45
80	5600	568LMH080MZEE	74.01	3.7	35x35
80	6800	688LMH080MZDH	60.951	3.9	30x50
80	6800	688LMH080MZEF	60.951	3.9	35x40
80	8200	828LMH080MZEG	60.951	4.3	35x45
100	820	827LMH100MZBC	404.357	1.4	22x25
100	1000	108LMH100MZBD	121.902	1.7	22x30
100	1200	128LMH100MZBD	276.31	1.8	22x30
100	1200	128LMH100MZCC	276.31	1.8	25x25
100	1500	158LMH100MZBE	221.05	2.1	22x35
100	1500	158LMH100MZCD	221.05	2.1	25x30
100	1800	188LMH100MZBF	184.207	2.3	22x40
100	1800	188LMH100MZCE	184.207	2.3	25x35
100	1800	188LMH100MZDC	184.207	2.3	30x25
100	2200	228LMH100MZCF	150.715	2.6	25x40
100	2200	228LMH100MZDD	150.715	2.6	30x30
100	2200	228LMH100MZEC	150.715	2.6	35x25
100	2700	278LMH100MZCG	122.805	2.9	25x45
100	2700	278LMH100MZDE	122.805	2.9	30x35
100	3300	338LMH100MZCH	100.48	3.2	25x50
100	3300	338LMH100MZDF	100.48	3.2	30x40
100	3300	338LMH100MZED	100.48	3.2	35x30

WVDC	(µF) Capacitance	IC PART NUMBER	Maximum ESR (mΩ) 120 Hz, +20°C	Maximum RMS Ripple Current (A) 120 Hz, +105°C	Dims DxL (mm)
100	3900	398LMH100MZDG	85.02	3.6	30x45
100	3900	398LMH100MZEE	85.02	3.6	35x35
100	4700	478LMH100MZDH	70.547	3.8	30x50
100	5600	568LMH100MZEG	59.21	4.1	35x45
160	150	157LMH160MZBD	1657.86	0.71	22x30
160	470	477LMH160MZBC	529.11	1.4	22x25
160	560	567LMH160MZBC	444.07	1.4	22x25
160	680	1687LMH160MZBD	365.71	1.7	22x30
160	680	687LMH160MZCC	365.71	1.7	25x25
160	820	827LMH160MZBE	303.27	2	22x35
160	820	827LMH160MZCD	303.27	2	25x30
160	1000	108LMH160MZBF	248.68	2.2	22x40
160	1000	108LMH160MZCE	248.68	2.2	25x35
160	1000	108LMH160MZDC	248.68	2.2	30x25
160	1200	128LMH160MZCF	207.23	2.3	25x40
160	1200	128LMH160MZDD	207.23	2.3	30x30
160	1200	128LMH160MZEC	207.23	2.33	35x25
160	1500	158LMH160MZCG	165.79	2.5	25x45
160	1500	158LMH160MZDE	165.79	2.5	30x35
160	1500	158LMH160MZED	165.79	2.5	35x30
160	1800	188LMH160MZCH	138.16	2.7	25x50
160	1800	188LMH160MZDF	138.16	2.7	30x40
160	1800	188LMH160MZED	138.16	2.7	35x30
160	2200	228LMH160MZDG	113.06	2.9	30x45
160	2200	228LMH160MZEE	113.06	2.9	35x35
160	2700	278LMH160MZDH	92.1	3.1	30x50
160	2700	278LMH160MZEF	92.1	3.1	35x40
160	3300	338LMH160MZEG	75.358	3.1	35x45
160	3300	338LMH160MZEH	75.358	3.3	35x50
200	390	397LMH200MZBC	637.64	1.31	22x25
200	470	477LMH200MZBD	529.11	1.44	22x30
200	560	567LMH200MZBD	444.071	1.48	22x30
200	560	567LMH200MZCC	444.071	1.48	25x25
200	680	687LMH200MZBF	365.71	1.75	22x40
200	680	687LMH200MZCD	365.71	1.75	25x30
200	820	827LMH200MZBF	303.27	1.75	22x40
200	820	827LMH200MZBG	303.27	2.04	22x45
200	820	827LMH200MZCE	303.27	2.04	25x35
200	820	827LMH200MZDC	303.27	1.92	30x25
200	1000	108LMH200MZBG	248.68	2.04	22x45
200	1000	108LMH200MZBH	248.68	2.3	22x50
200	1000	108LMH200MZCG	248.68	2.3	25x45
200	1000	108LMH200MZDD	248.68	2.3	30x30
200	1000	108LMH200MZEC	248.68	2.3	35x25
200	1200	128LMH200MZCG	207.23	2.65	25x45
200	1200	128LMH200MZCH	207.23	2.65	25x50
200	1200	128LMH200MZDE	207.23	2.65	30x35
200	1200	128LMH200MZEC	207.23	2.3	35x25
200	1200	128LMH200MZED	207.23	2.65	35x30
200	1500	158LMH200MZCH	165.79	2.57	25x50
200	1500	158LMH200MZDF	165.79	2.8	30x40
200	1500	158LMH200MZED	165.79	2.49	35x30
200	1800	188LMH200MZDG	138.16	2.68	30x45
200	1800	188LMH200MZEF	138.16	2.08	35x40
200	2200	228LMH200MZDH	113.036	2.92	30x50
200	2200	228LMH200MZEF	113.036	2.92	35x40
200	2200	228LMH200MZEG	113.06	3.48	35x45
200	2700	278LMH200MZEG	92.104	3.27	35x45

Americas / EU
Phone: 1-508-996-8561
Email: cdena@cde.com

CDE ENERGIZING IDEAS
CORNELL DUBILIER
ILLINOIS CAPACITOR

Asia
Phone: 852-2793-0931
Email: cdeasia@cde.com

LMH

+105°C, Standard, 2000 hrs

WVDC	Capacitance (µF)	IC PART NUMBER	Maximum ESR (mΩ) 120 Hz, +20°C	Maximum RMS Ripple Current (A) 120 Hz, +105°C	Dims DxL (mm)
250	220	227LMH250MZBC	1130.62	0.89	22x25
250	270	277LMH250MZBC	921.04	1.1	22x25
250	330	337LMH250M2BD	753.58	1.2	22x30
250	330	337LMH250MZCC	753.58	1.2	25x25
250	390	397LMH250MZBD	637.64	1.3	22x30
250	390	397LMH250MZBE	637.64	1.3	22x35
250	390	397LMH250MZCC	637.64	1.3	25x25
250	470	477LMH250M2BF	529.11	1.4	22x40
250	470	477LMH250MZBE	529.11	1.4	22x35
250	470	477LMH250MZCD	529.11	1.4	25x30
250	560	567LMH250MZBF	444.071	1.4	22x40
250	560	567LMH250MZCE	444.071	1.49	25x35
250	560	567LMH250MZDC	444.071	1.44	30x25
250	680	687LMH250MZBG	365.71	1.7	22x45
250	680	687LMH250MZBH	365.71	1.7	22x50
250	680	687LMH250MZCF	365.71	1.73	25x40
250	680	687LMH250MZDD	365.71	1.71	30x30
250	680	687LMH250MZEC	365.71	1.7	35x25
250	820	827LMH250MZCG	303.27	2	25x45
250	820	827LMH250MZDE	303.27	2	30x35
250	820	827LMH250MZED	303.27	2	35x30
250	1000	108LMH250MZCH	248.68	2.2	25x50
250	1000	108LMH250MZDF	248.68	2.2	30x40
250	1000	108LMH250MZED	248.68	2.2	35x30
250	1200	128LMH250MZDG	207.23	2.3	30x45
250	1200	128LMH250MZEE	207.23	2.3	35x35
250	1500	158LMH250MZDH	165.786	2.3	30x50
250	1500	158LMH250MZEF	165.786	2.3	35x40
250	1500	158LMH250MZEG	165.79	2.5	35x45
250	1800	188LMH250MZEG	138.16	2.5	35x45
250	1800	188LMH250MZEH	138.16	2.7	35x50
350	120	127LMH350MZBC	2072.33	0.75	22x25
350	180	187LMH350MZBD	1381.55	0.9	22x30
350	180	187LMH350MZCC	1381.55	0.9	25x25
350	220	227LMH350MZBE	1130.62	1	22x35
350	220	227LMH350MZCD	1130.62	1	25x30
350	270	277LMH350M2BF	921.04	1.1	22x40
350	270	277LMH350MZCD	921.04	1.1	25x30
350	270	277LMH350MZDC	921.04	1.1	30x25
350	330	337LMH350MZBG	753.58	1.2	22x45
350	330	337LMH350MZCG	753.58	1.2	25x45
350	330	337LMH350MZDD	753.58	1.2	30x30
350	390	397LMH350MZCG	637.64	1.3	25x45
350	390	397LMH350MZDE	637.64	1.3	30x35
350	470	477LMH350MZCH	529.11	1.4	25x50
350	470	477LMH350MZDE	529.11	1.4	30x35
350	470	477LMH350MZED	529.11	1.4	35x30
350	560	567LMH350MZDG	444.071	1.5	30x45
350	560	567LMH350MZEE	444.071	1.5	35x35
350	680	687LMH350MZDH	365.71	1.7	30x50
350	680	687LMH350MZEF	365.71	1.7	35x40
350	820	827LMH350MZEG	303.27	2	35x45
400	100	107LMH400MZBC	2486.8	0.7	22x25
400	120	127LMH400MZBC	2072.33	0.68	22x25
400	120	127LMH400MZBD	2072.33	0.75	22x30
400	150	157LMH400MZBD	1657.86	0.88	22x30
400	150	157LMH400MZCC	1657.86	0.88	25x25
400	180	187LMH400MZBD	1381.55	0.73	22x30

WVDC	Capacitance (µF)	IC PART NUMBER	Maximum ESR (mΩ) 120 Hz, +20°C	Maximum RMS Ripple Current (A) 120 Hz, +105°C	Dims DxL (mm)
400	180	187LMH400MZBE	1381.55	0.95	22x35
400	180	187LMH400MZCC	1381.55	0.73	25x25
400	180	187LMH400MZCD	1381.55	0.95	25x30
400	220	227LMH400MZBE	1130.62	0.85	22x35
400	220	227LMH400MZBG	1130.62	1.1	22x45
400	220	227LMH400MZCD	1130.62	0.85	25x30
400	220	227LMH400MZCE	1130.62	1.1	25x35
400	220	227LMH400MZDC	1130.62	1.1	30x25
400	270	277LMH400MZBF	921.04	1	22x40
400	270	277LMH400MZBH	921.04	1.22	22x50
400	270	277LMH400MZCE	921.04	1	25x35
400	270	277LMH400MZCF	921.04	1.22	25x40
400	270	277LMH400MZDC	921.04	1	30x25
400	270	277LMH400MZDD	921.04	1.22	30x30
400	270	277LMH400MZEC	921.04	1.22	35x25
400	330	337LMH400MZBH	753.58	1.15	22x50
400	330	337LMH400MZCF	753.58	1.15	25x40
400	330	337LMH400MZCG	753.58	1.44	25x45
400	330	337LMH400MZDD	753.58	1.44	30x30
400	330	337LMH400MZDE	753.58	1.37	30x35
400	330	337LMH400MZEC	753.58	1.15	35x25
400	330	337LMH400MZED	753.58	1.44	35x30
400	390	397LMH400MZCG	637.64	1.4	25x45
400	390	397LMH400MZCH	637.64	1.55	25x50
400	390	397LMH400MZDF	637.64	1.58	30x40
400	390	397LMH400MZED	637.64	1.55	35x30
400	470	477LMH400MZCH	529.11	1.55	25x50
400	470	477LMH400MZDF	529.11	1.55	30x40
400	470	477LMH400MZDG	529.11	1.68	30x45
400	470	477LMH400MZED	529.11	1.55	35x30
400	470	477LMH400MZEE	529.11	1.68	35x35
400	560	567LMH400MZDG	444.071	1.9	30x45
400	560	567LMH400MZDH	444.071	1.9	30x50
400	560	567LMH400MZEE	444.071	1.63	35x35
400	560	567LMH400MZEF	444.071	1.9	35x40
400	680	687LMH400MZDH	365.71	1.8	30x50
400	680	687LMH400MZEF	365.71	1.8	35x40
400	680	687LMH400MZEG	365.71	2.12	35x45
400	820	827LMH400MZEG	303.27	1.9	35x45
400	820	827LMH400MZEH	303.27	2.3	35x50
450	68	686LMH450MZBC	365.71	0.47	22x25
450	82	826LMH450MZBD	3032.68	0.55	22x30
450	100	107LMH450MZBC	2486.8	0.64	22x25
450	100	107LMH450MZCC	2486.8	0.64	25x25
450	120	127LMH450MZBD	2072.33	0.69	22x30
450	120	127LMH450MZBE	2072.33	0.72	22x35
450	120	127LMH450MZCC	2072.33	0.69	25x25
450	120	127LMH450MZCD	2072.33	0.72	25x30
450	150	157LMH450MZBE	1657.86	0.79	22x35
450	150	157LMH450MZCD	1657.86	0.79	25x30
450	150	157LMH450MZDC	1657.86	0.79	30x25
450	180	187LMH450MZBF	1381.55	0.79	22x40
450	180	187LMH450MZBG	1381.55	0.87	22x45
450	180	187LMH450MZCD	1381.55	0.79	25x30
450	180	187LMH450MZCF	1381.55	0.87	25x40
450	180	187LMH450MZDD	1381.55	0.87	30x30
450	220	227LMH450MZBG	1130.62	0.87	22x45
450	220	227LMH450MZCE	1130.62	0.87	25x35

Americas / EU
Phone: 1-508-996-8561
Email: cdena@cde.com

CDE CORNELL DUBILIER
ENERGIZING IDEAS
ILLINOIS CAPACITOR

Asia
Phone: 852-2793-0931
Email: cdeasia@cde.com

LMH

+105°C, Standard, 2000 hrs

WVDC	Capacitance (µF)	IC PART NUMBER	Maximum ESR (mΩ) 120 Hz, +20°C	Maximum RMS Ripple Current (A) 120 Hz, +105°C	Dims DxL (mm)
450	220	227LMH450MZCG	1130.62	1	25x45
450	220	227LMH450MZDD	1130.62	1	30x30
450	220	227LMH450MZEC	1130.62	1	35x25
450	270	277LMH450MZBH	921.04	1.05	22x50
450	270	277LMH450MZCF	921.04	1.05	25x40
450	270	277LMH450MZCH	921.04	1.19	25x50
450	270	277LMH450MZDD	921.04	1.05	30x30
450	270	277LMH450MZDF	921.04	1.19	30x40
450	270	277LMH450MZEC	921.04	1.05	35x25
450	270	277LMH450MZED	921.04	1.19	35x30
450	330	337LMH450MZCH	753.58	1.2	25x50
450	330	337LMH450MZDE	753.58	1.2	30x35

WVDC	Capacitance (µF)	IC PART NUMBER	Maximum ESR (mΩ) 120 Hz, +20°C	Maximum RMS Ripple Current (A) 120 Hz, +105°C	Dims DxL (mm)
450	330	337LMH450MZDG	753.58	1.38	30x45
450	330	337LMH450MZED	753.58	1.38	35x30
450	330	337LMH450MZEE	753.58	1.38	35x35
450	390	397LMH450MZDF	637.64	1.38	30x40
450	390	397LMH450MZDH	637.64	1.74	30x50
450	390	397LMH450MZEE	637.64	1.55	35x35
450	470	477LMH450MZDG	529.11	1.55	30x45
450	470	477LMH450MZEF	529.11	1.55	35x40
450	470	477LMH450MZEG	529.11	1.74	35x45
450	560	567LMH450MZEG	444.071	1.7	35x45
450	560	567LMH450MZEH	444.071	1.9	35x50
450	680	687LMH450MZEH	365.71	1.91	35x50

Americas / EU
Phone: 1-508-996-8561
Email: cdena@cde.com

CDE CORNELL DUBILIER
ENERGIZING IDEAS
ILLINOIS CAPACITOR

Asia
Phone: 852-2793-0931
Email: cdeasia@cde.com

LMX

Aluminum Electrolytic Capacitors

105°C 5,000 Hour Snap-Mount

FEATURES	Multiple Case Sizes - High Voltage – High Current
APPLICATIONS	Bulk Filtering – Switching Power Supplies

Operating Temperature Range		**-40°C to +105°C (≤100WVDC) -25°C to +105°C (≥160WVDC)**													
Capacitance Tolerance		**±20% at 120 Hz, 20°C**													
Surge Voltage	**WVDC**	**10**	**16**	**25**	**35**	**50**	**63**	**80**	**100**	**160**	**200**	**250**	**350**	**400**	**450**
	SVDC	13	20	32	44	63	79	100	120	200	250	300	400	450	500
Dissipation Factor tan δ (120 Hz)	**WVDC**	**10**	**16**	**25**	**35**	**50**	**63**	**80**	**100**	**160**	**200**	**250**	**350**	**400**	**450**
		.6	.45	.3	.25	.2	.15	.15	.15	.15	.15	.15	.15	.2	.2
		For capacitances above 33000uF, add to DF value (Capacitance-33000) / 10000 *0.1													
Leakage Current @20°C, Rated WVDC applied		Time			**5 Minutes**										
					3√CV										
Impedance Ratio (120 Hz)	**WVDC**	**10**	**16**	**25**	**35**	**50**	**63**	**80**	**100**	**160**	**200**	**250**	**350**	**400**	**450**
	-25°C/+20°C	6	6	6	6	4	3	3	3	8	8	8	8	8	8
	-40°C/+20°C	15	15	15	15	15	15	15		-	-	-	-	-	-
Load Life		**5000 hours at 105°C with rated WVDC and ripple current applied**													
		Capacitance change	≤20% of initial measured value												
		Dissipation factor	≤200% of maximum specified value												
		Leakage current	≤100% of maximum specified value												
Shelf Life		**1000 hours at 105°C with no voltage applied**													
		Capacitance Change	≤20% of initial measured value												
		Dissipation Factor	≤200% of maximum specified value												
		Leakage Current	≤100% of maximum specified value												
Ripple Current Multipliers		**Frequency (Hz)**							**Temperature (°C)**						
	WVDC	60	120	400	1k	10k	50k		45	65	75	85	105		
	≤100	0.9	1.0	1.0	1.15	1.25	1.25		2.4	2.1	1.9	1.7	1		
	160<V≤250	0.8	1.0	1.0	1.25	1.47	1.47		2.4	2.1	1.9	1.7	1		
	≥350	0.8	1.0	1.0	1.3	1.47	1.47		2.4	2.1	1.9	1.7	1		

Americas / EU
Phone: 1-508-996-8561
Email: cdena@cde.com

CDE ENERGIZING IDEAS
CORNELL DUBILIER
ILLINOIS CAPACITOR

Asia
Phone: 852-2793-0931
Email: cdeasia@cde.com

LMX

Aluminum Electrolytic Capacitors

105°C 5,000 Hour Snap-Mount

Lead Style Options

Code 2(standard)

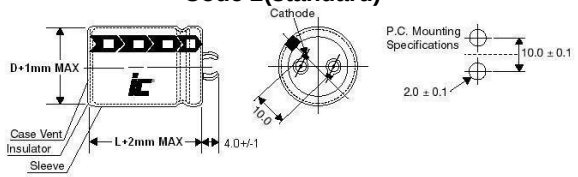

Diameter 20 to 40 mm

Code W

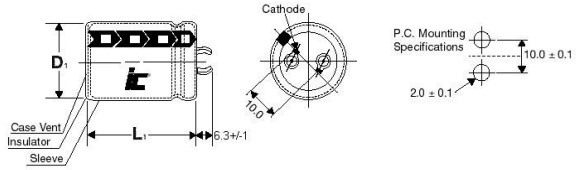

Diameter 20 to 40 mm

Code P

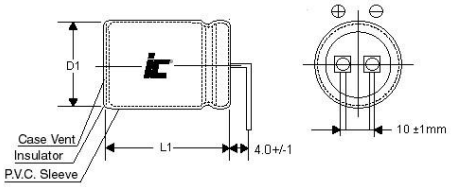

Diameter 22 to 35 mm

Code D

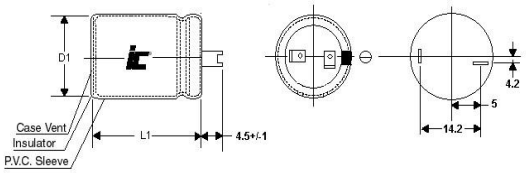

Diameter 30 to 40 mm

Code 9

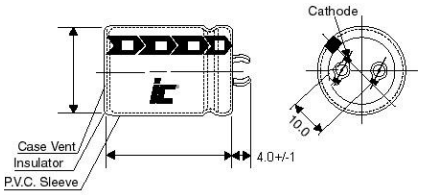

Diameter 25 to 35 mm

Code T

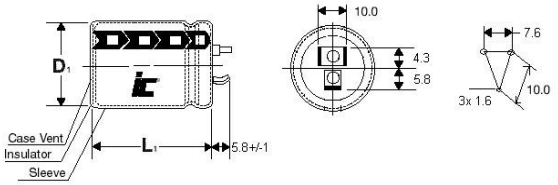

Diameter 25 to 35 mm

Code 4

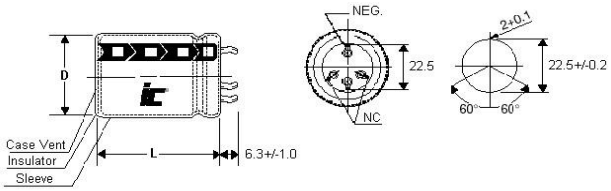

Diameter 35 to 45 mm

Code 4S (straight leads)

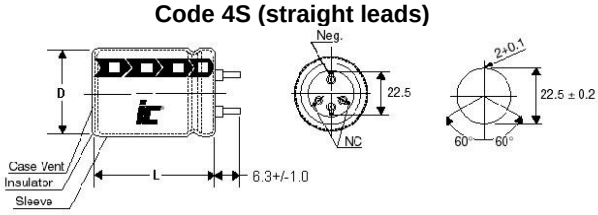

Diameter 35 to 45 mm

Code 5

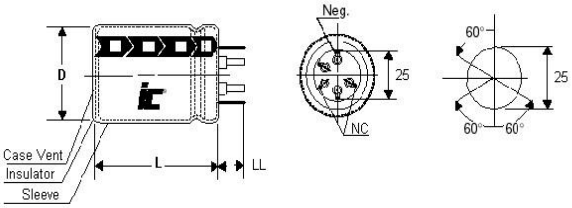

Diameter 40 to 50 mm

Code G

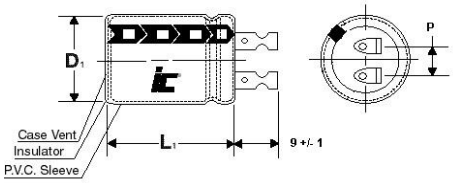

D	35	40	50	63	76
P	14	14	18	25	25

Diameter 35 to 76 mm

Americas / EU
Phone: 1-508-996-8561
Email: cdena@cde.com

CDE ENERGIZING IDEAS
CORNELL DUBILIER
ILLINOIS CAPACITOR

Asia
Phone: 852-2793-0931
Email: cdeasia@cde.com

LMX

+105°C, Long Life, 5000 Hour

WVDC	Capacitance (µF)	IC PART NUMBER	Maximum ESR (Ω) 120 Hz, +20°C	Maximum RMS Ripple Current (A) 120 Hz, +105°C	Dims DxL (mm)
10	6800	688LMX010M2BC	0.1463	1.3	22x25
10	10000	109LMX010M2BD	0.0995	1.65	22x30
10	10000	109LMX010M2CC	0.0995	1.64	25x25
10	12000	129LMX010M2BE	0.0829	1.85	22x35
10	12000	129LMX010M2CD	0.0829	1.85	25x30
10	12000	129LMX010M2DC	0.0829	1.89	30x25
10	15000	159LMX010M2BF	0.0663	2.12	22x40
10	15000	159LMX010M2CE	0.0663	2.16	25x35
10	18000	189LMX010M2BH	0.0553	2.45	22x50
10	18000	189LMX010M2CF	0.0553	2.43	25x40
10	18000	189LMX010M2DD	0.0553	2.37	30x30
10	18000	189LMX010M2EC	0.0553	2.43	35x25
10	22000	229LMX010M2BG	0.0452	2.65	22x45
10	22000	229LMX010M2CF	0.0452	2.7	25x40
10	22000	229LMX010M2DE	0.0452	2.73	30x35
10	22000	229LMX010M2ED	0.0452	2.79	35x30
10	27000	279LMX010M2CH	0.0368	3.11	25x50
10	27000	279LMX010M2DF	0.0368	3.13	30x40
10	33000	339LMX010M2BH	0.0301	3.35	22x50
10	33000	339LMX010M2CG	0.0301	3.4	25x45
10	33000	339LMX010M2DE	0.0301	3.48	30x35
10	33000	339LMX010M2EE	0.0301	3.49	35x35
10	39000	399LMX010M2DH	0.0255	3.99	30x50
10	39000	399LMX010M2EF	0.0255	3.96	35x40
10	47000	479LMX010M2DG	0.0212	4.15	30x45
10	47000	479LMX010M2EF	0.0212	4.62	35x40
16	5600	568LMX016M2BC	0.1332	1.44	22x25
16	6800	688LMX016M2BD	0.1097	1.66	22x30
16	6800	688LMX016M2CC	0.1097	1.66	25x25
16	8200	828LMX016M2BE	0.091	1.87	22x35
16	8200	828LMX016M2CC	0.091	1.85	25x25
16	10000	109LMX016M2BF	0.0746	2.12	22x40
16	10000	109LMX016M2CD	0.0746	2.07	25x30
16	10000	109LMX016M2DC	0.0746	2.11	30x25
16	12000	129LMX016M2BG	0.0622	2.45	22x45
16	12000	129LMX016M2CE	0.0622	2.37	25x35
16	12000	129LMX016M2DD	0.0622	2.37	30x30
16	12000	129LMX016M2EC	0.0622	2.42	35x25
16	15000	159LMX016M2BH	0.0497	2.74	22x50
16	15000	159LMX016M2CF	0.0497	2.71	25x40
16	15000	159LMX016M2DD	0.0497	2.75	30x30
16	15000	159LMX016M2EC	0.0497	2.65	35x25
16	18000	189LMX016M2CH	0.0414	3.11	25x50
16	18000	189LMX016M2DE	0.0414	3.02	30x35
16	18000	189LMX016M2ED	0.0414	3.09	35x30
16	22000	229LMX016M2DF	0.0339	3.46	30x40
16	22000	229LMX016M2EE	0.0339	3.49	35x35
16	27000	279LMX016M2DH	0.0276	4.07	30x50
16	27000	279LMX016M2EF	0.0276	4.04	35x40
16	33000	339LMX016M2EF	0.0226	4.65	35x40
16	39000	399LMX016M2EH	0.0191	5.16	35x50
25	3900	398LMX025M2BC	0.1275	1.31	22x25
25	4700	478LMX025M2BD	0.1058	1.51	22x30
25	4700	478LMX025M2CC	0.1058	1.51	25x25
25	5600	568LMX025M2BE	0.0888	1.7	22x35
25	5600	568LMX025M2CC	0.0888	1.65	25x25
25	6800	688LMX025M2BF	0.0731	1.92	22x40
25	6800	688LMX025M2CD	0.0731	1.87	25x30

WVDC	Capacitance (µF)	IC PART NUMBER	Maximum ESR (Ω) 120 Hz, +20°C	Maximum RMS Ripple Current (A) 120 Hz, +105°C	Dims DxL (mm)
25	6800	688LMX025M2DC	0.0731	1.9	30x25
25	8200	828LMX025M2BG	0.0607	2.15	22x45
25	8200	828LMX025M2CE	0.0607	2.14	25x35
25	8200	828LMX025M2DD	0.0607	2.16	30x30
25	8200	828LMX025M2EC	0.0607	2.19	35x25
25	10000	109LMX025M2BH	0.0497	2.45	22x50
25	10000	109LMX025M2CF	0.0497	2.43	25x40
25	12000	129LMX025M2CH	0.0414	2.78	25x50
25	12000	129LMX025M2DE	0.0414	2.7	30x35
25	12000	129LMX025M2ED	0.0414	2.76	35x30
25	15000	159LMX025M2DF	0.0332	3.13	30x40
25	15000	159LMX025M2EE	0.0332	3.16	35x35
25	18000	189LMX025M2DH	0.0276	3.64	30x50
25	18000	189LMX025M2EF	0.0276	3.61	35x40
25	27000	279LMX025M2EH	0.0301	4.7	35x50
35	2200	228LMX035M2BC	0.1884	1.1	22x25
35	3300	338LMX035M2BD	0.1063	1.42	22x30
35	3300	338LMX035M2CC	0.1063	1.41	25x25
35	3900	398LMX035M2BE	0.1063	1.58	22x35
35	3900	398LMX035M2CD	0.106	1.58	25x30
35	4700	478LMX035M2BF	0.0882	1.78	22x40
35	4700	478LMX035M2CD	0.0882	1.7	25x30
35	4700	478LMX035M2DC	0.0882	1.77	30x25
35	5600	568LMX035M2CE	0.074	1.98	25x35
35	5600	568LMX035M2DD	0.074	1.98	30x30
35	5600	568LMX035M2EC	0.074	2.03	35x25
35	6800	688LMX035M2BH	0.061	2.26	22x50
35	6800	688LMX035M2CF	0.061	2.24	25x40
35	8200	828LMX035M2CH	0.0505	2.57	25x50
35	8200	828LMX035M2DE	0.0505	2.5	30x35
35	8200	828LMX035M2ED	0.0505	2.55	35x30
35	10000	109LMX035M2DF	0.0414	2.86	30x40
35	10000	109LMX035M2EE	0.0414	2.88	35x35
35	12000	129LMX035M2DH	0.0345	3.32	30x50
35	12000	129LMX035M2EF	0.0345	3.3	35x40
35	18000	189LMX035M2EH	0.023	4.29	35x50
50	1500	158LMX050M2BC	0.221	1.02	22x25
50	1800	188LMX050M2BD	0.1842	1.17	22x30
50	1800	188LMX050M2CC	0.1842	1.17	25x25
50	2200	228LMX050M2BE	0.1507	1.33	22x35
50	2200	228LMX050M2CC	0.1507	1.35	25x25
50	2700	278LMX050M2BF	0.1228	1.51	22x40
50	2700	278LMX050M2CD	0.1228	1.47	25x30
50	2700	278LMX050M2DC	0.1228	1.5	30x25
50	3300	338LMX050M2CE	0.085	1.7	25x35
50	3300	338LMX050M2DD	0.085	1.7	30x30
50	3300	338LMX050M2EC	0.085	2.2	35x25
50	3900	398LMX050M2BH	0.085	1.91	22x50
50	3900	398LMX050M2CF	0.085	1.89	25x40
50	3900	398LMX050M2DD	0.085	1.89	30x30
50	3900	398LMX050M2EC	0.085	2.1	35x25
50	4700	478LMX050M2DE	0.0705	2.11	30x35
50	4700	478LMX050M2ED	0.0705	2.16	35x30
50	5600	568LMX050M2CH	0.0592	2.38	25x50
50	5600	568LMX050M2DF	0.0592	2.39	30x40
50	5600	568LMX050M2EE	0.0592	2.41	35x35
50	6800	688LMX050M2DH	0.0488	2.79	30x50
50	6800	688LMX050M2EF	0.0488	2.78	35x40

Americas / EU
Phone: 1-508-996-8561
Email: cdena@cde.com

CDE CORNELL DUBILIER
ENERGIZING IDEAS
ILLINOIS CAPACITOR

Asia
Phone: 852-2793-0931
Email: cdeasia@cde.com

LMX

+105°C, Long Life, 5000 Hour

WVDC	Capacitance (µF)	IC PART NUMBER	Maximum ESR (Ω) 120 Hz, +20°C	Maximum RMS Ripple Current (A) 120 Hz, +105°C	Dims DxL (mm)
50	10000	109LMX050M2EH	0.0332	3.57	35x50
63	1000	108LMX063M2BC	0.2487	1	22x25
63	1200	128LMX063M2BD	0.2072	1.15	22x30
63	1200	128LMX063M2CC	0.2072	1.15	25x25
63	1500	158LMX063M2BE	0.1658	1.32	22x35
63	1500	158LMX063M2CC	0.1658	1.35	25x25
63	1800	188LMX063M2BF	0.1382	1.49	22x40
63	1800	188LMX063M2CD	0.1382	1.45	25x30
63	1800	188LMX063M2DC	0.1382	1.48	30x25
63	2200	228LMX063M2BG	0.113	1.75	22x45
63	2200	228LMX063M2CE	0.113	1.67	25x35
63	2200	228LMX063M2DD	0.113	1.68	30x30
63	2200	228LMX063M2EC	0.113	1.71	35x25
63	2700	278LMX063M2BH	0.0921	1.92	22x50
63	2700	278LMX063M2CF	0.0921	1.9	25x40
63	2700	278LMX063M2DE	0.0921	1.93	30x35
63	2700	278LMX063M2EC	0.0921	1.95	35x25
63	3300	338LMX063M2CG	0.0638	2.2	25x45
63	3300	338LMX063M2CH	0.0638	2.2	25x50
63	3300	338LMX063M2DE	0.0638	2.35	30x35
63	3300	338LMX063M2ED	0.0638	2.18	35x30
63	3900	398LMX063M2CH	0.0638	2.35	25x50
63	3900	398LMX063M2DF	0.0638	2.41	30x40
63	3900	398LMX063M2EE	0.0638	2.43	35x35
63	4700	478LMX063M2DH	0.0529	2.8	30x50
63	4700	478LMX063M2EF	0.0529	2.78	35x40
63	5600	568LMX063M2EF	0.0444	2.95	35x40
63	6800	688LMX063M2EG	0.0366	3.25	35x45
63	6800	688LMX063M2EH	0.0366	3.55	35x50
63	8200	828LMX063M2EH	0.0303	3.55	35x50
80	680	687LMX080M2BC	0.3657	0.97	22x25
80	820	827LMX080M2BD	0.3033	1.12	22x30
80	1000	108LMX080M2BE	0.2487	1.7	22x35
80	1000	108LMX080M2CC	0.2487	1.36	25x25
80	1200	128LMX080M2BF	0.2072	1.75	22x40
80	1200	128LMX080M2CD	0.2072	1.39	25x30
80	1200	128LMX080M2DC	0.2072	1.41	30x25
80	1500	158LMX080M2BF	0.1658	1.8	22x40
80	1500	158LMX080M2CE	0.1658	1.62	25x35
80	1500	158LMX080M2D	0.1658	1.65	30x25
80	1800	188LMX080M2BF	0.1382	1.82	22x40
80	1800	188LMX080M2BH	0.1382	1.84	22x50
80	1800	188LMX080M2CE	0.1382	1.85	25x35
80	1800	188LMX080M2CF	0.1382	1.95	25x40
80	1800	188LMX080M2DD	0.1382	1.78	30x30
80	1800	188LMX080M2EC	0.1382	1.92	35x25
80	2200	228LMX080M2CH	0.113	2.11	25x50
80	2200	228LMX080M2DE	0.113	2.05	30x35
80	2200	228LMX080M2ED	0.113	2.09	35x30
80	2700	278LMX080M2DF	0.0921	3.35	30x40
80	2700	278LMX080M2EE	0.0921	2.65	35x35
80	3300	338LMX080M2DH	0.0638	2.75	30x50
80	3300	338LMX080M2EF	0.0638	2.73	35x40
80	4700	478LMX080M2EH	0.0529	3.46	35x50
100	390	397LMX100M2BC	0.6376	0.78	22x25
100	560	567LMX100M2BD	0.4441	0.99	22x30
100	560	567LMX100M2CC	0.4441	0.98	25x25
100	680	687LMX100M2BE	0.3657	1.12	22x35

WVDC	Capacitance (µF)	IC PART NUMBER	Maximum ESR (Ω) 120 Hz, +20°C	Maximum RMS Ripple Current (A) 120 Hz, +105°C	Dims DxL (mm)
100	680	687LMX100M2CC	0.3657	1.05	25x25
100	820	827LMX100M2BF	0.3033	1.26	22x40
100	820	827LMX100M2CD	0.3033	1.23	25x30
100	820	827LMX100M2DC	0.3033	1.25	30x25
100	1000	108LMX100M2BG	0.2487	1.41	22x45
100	1000	108LMX100M2CE	0.2487	1.45	25x35
100	1000	108LMX100M2DD	0.2487	1.42	30x30
100	1000	108LMX100M2EC	0.2487	1.45	35x25
100	1200	128LMX100M2BH	0.2072	1.6	22x50
100	1200	128LMX100M2CF	0.2072	1.59	25x40
100	1200	128LMX100M2DE	0.2072	1.61	30x35
100	1200	128LMX100M2EC	0.2072	1.65	35x25
100	1500	158LMX100M2CH	0.1658	1.86	25x50
100	1500	158LMX100M2DF	0.1658	1.87	30x40
100	1500	158LMX100M2ED	0.1658	1.85	35x30
100	1800	188LMX100M2DF	0.1382	1.95	30x40
100	1800	188LMX100M2DG	0.1382	2.15	30x45
100	1800	188LMX100M2EE	0.1382	2.07	35x35
100	2200	228LMX100M2DH	0.113	2.4	30x50
100	2200	228LMX100M2EF	0.113	2.39	35x40
100	2700	278LMX100M2EH	0.0921	2.81	35x50
160	390	397LMX160M2BD	0.6376	1.42	22x30
160	470	477LMX160M2BE	0.5291	1.62	22x35
160	560	567LMX160M2BE	0.4441	1.77	22x35
160	560	567LMX160M2CD	0.4441	1.81	25x30
160	560	567LMX160M2DC	0.4441	1.81	30x25
160	680	687LMX160M2BF	0.3657	1.98	22x40
160	680	687LMX160M2BG	0.3657	1.98	22x45
160	680	687LMX160M2CE	0.3657	2.01	25x35
160	680	687LMX160M2DC	0.3657	1.96	30x25
160	680	687LMX160M2DD	0.3657	1.96	30x30
160	820	827LMX160M2BG	0.3033	2.2	22x45
160	820	827LMX160M2BH	0.3033	2.2	22x50
160	820	827LMX160M2CF	0.3033	2.24	25x40
160	820	827LMX160M2DE	0.3033	2.2	30x35
160	1000	108LMX160M2CG	0.2487	2.55	25x45
160	1000	108LMX160M2DE	0.2487	2.55	30x35
160	1000	108LMX160M2DF	0.2487	2.55	30x40
160	1000	108LMX160M2EC	0.2487	2.55	35x25
160	1200	128LMX160M2CH	0.2072	2.93	25x50
160	1200	128LMX160M2DF	0.2072	2.84	30x40
160	1200	128LMX160M2DG	0.2072	2.84	30x45
160	1200	128LMX160M2ED	0.2072	2.86	35x30
160	1500	158LMX160M2DG	0.1658	3.17	30x45
160	1500	158LMX160M2DH	0.1658	3.22	30x50
160	1500	158LMX160M2EE	0.1658	3.22	35x35
160	1800	188LMX160M2DH	0.1382	3.53	30x50
160	1800	188LMX160M2EF	0.1382	3.66	35x40
160	2200	228LMX160M2EG	0.113	4.14	35x45
160	2700	278LMX160M2EH	0.0921	4.68	35x50
200	220	227LMX200M2BC	1.1304	0.85	22x25
200	270	277LMX200M2BC	0.921	1.1	22x25
200	270	277LMX200M2BD	0.921	1.02	22x30
200	270	277LMX200M2CC	0.921	1.02	25x25
200	330	337LMX200M2BD	0.754	1.12	22x30
200	330	337LMX200M2BE	0.754	1.2	22x35
200	330	337LMX200M2CC	0.754	1.12	25x25
200	330	337LMX200M2CD	0.754	1.21	25x30

Americas / EU
Phone: 1-508-996-8561
Email: cdena@cde.com

CDE ENERGIZING IDEAS CORNELL DUBILIER
ILLINOIS CAPACITOR

Asia
Phone: 852-2793-0931
Email: cdeasia@cde.com

LMX

+105°C, Long Life, 5000 Hour

WVDC	Capacitance (µF)	IC PART NUMBER	Maximum ESR (Ω) 120 Hz, +20°C	Maximum RMS Ripple Current (A) 120 Hz, +105°C	Dims DxL (mm)
200	390	397LMX200M2BE	0.6376	1.31	22x35
200	390	397LMX200M2CD	0.6376	1.32	25x30
200	390	397LMX200M2CE	0.6376	1.4	25x35
200	390	397LMX200M2DC	0.6376	1.37	30x25
200	470	477LMX200M2BF	0.5291	1.52	22x40
200	470	477LMX200M2BG	0.5291	1.6	22x45
200	470	477LMX200M2CD	0.5291	1.45	25x30
200	470	477LMX200M2CE	0.5291	1.54	25x35
200	470	477LMX200M2DC	0.5291	1.5	30x25
200	470	477LMX200M2DD	0.5291	1.61	30x30
200	560	567LMX200M2BG	0.4441	1.75	22x45
200	560	567LMX200M2BH	0.4441	1.83	22x50
200	560	567LMX200M2CE	0.4441	1.68	25x35
200	560	567LMX200M2CF	0.4441	1.78	25x40
200	560	567LMX200M2DC	0.4441	1.78	30x25
200	560	567LMX200M2DD	0.4441	1.76	30x30
200	560	567LMX200M2DE	0.4441	1.87	30x35
200	680	687LMX200M2BH	0.3657	1.9	22x50
200	680	687LMX200M2CF	0.3657	1.96	25x40
200	680	687LMX200M2CH	0.3657	2.16	25x50
200	680	687LMX200M2DD	0.3657	1.94	30x30
200	680	687LMX200M2DE	0.3657	2.06	30x35
200	680	687LMX200M2EC	0.3657	1.98	35x25
200	820	827LMX200M2CG	0.3033	2.27	25x45
200	820	827LMX200M2DE	0.3033	2.26	30x35
200	820	827LMX200M2DF	0.3033	2.39	30x40
200	820	827LMX200M2ED	0.3033	2.33	35x30
200	1000	108LMX200M2CH	0.2487	2.46	25x50
200	1000	108LMX200M2DF	0.2487	2.64	30x40
200	1000	108LMX200M2DG	0.2487	2.78	30x45
200	1000	108LMX200M2EE	0.2487	2.74	35x35
200	1200	128LMX200M2DG	0.2072	3.04	30x45
200	1200	128LMX200M2DH	0.2072	3.19	30x50
200	1200	128LMX200M2EE	0.2072	2.88	35x35
200	1200	128LMX200M2EF	0.2072	3.17	35x40
200	1200	128LMX200M2EG	0.2072	3.33	35x45
200	1500	158LMX200M2EF	0.1658	3.34	35x40
200	1500	158LMX200M2EG	0.1658	3.72	35x45
200	1500	158LMX200M2EH	0.1658	3.75	35x50
200	1800	188LMX200M2EG	0.1382	3.74	35x45
200	1800	188LMX200M2EH	0.1382	4.1	35x50
250	150	157LMX250M2BC	1.6279	0.69	22x25
250	180	187LMX250M2BC	1.3816	0.76	22x25
250	180	187LMX250M2BD	1.3816	0.82	22x30
250	180	187LMX250M2CC	1.3816	0.82	25x25
250	220	227LMX250M2BD	1.1304	0.91	22x30
250	220	227LMX250M2BE	1.1304	0.97	22x35
250	220	227LMX250M2CD	1.1304	0.98	25x30
250	270	277LMX250M2BD	0.921	1.01	22x30
250	270	277LMX250M2BE	0.921	1.07	22x35
250	270	277LMX250M2CC	0.921	1.01	25x25
250	270	277LMX250M2CD	0.921	1.08	25x30
250	330	337LMX250M2BE	0.754	1.19	22x35
250	330	337LMX250M2BF	0.754	1.26	22x40
250	330	337LMX250M2CD	0.754	1.2	25x30
250	330	337LMX250M2CE	0.754	1.28	25x35
250	330	337LMX250M2DC	0.754	1.24	30x25
250	390	397LMX250M2BF	0.6376	1.37	22x40

WVDC	Capacitance (µF)	IC PART NUMBER	Maximum ESR (Ω) 120 Hz, +20°C	Maximum RMS Ripple Current (A) 120 Hz, +105°C	Dims DxL (mm)
250	390	397LMX250M2BG	0.6376	1.44	22x45
250	390	397LMX250M2CE	0.6376	1.39	25x35
250	390	397LMX250M2CF	0.6376	1.47	25x40
250	390	397LMX250M2DD	0.6376	1.45	30x30
250	390	397LMX250M2DE	0.6376	1.54	30x35
250	470	477LMX250M2BH	0.5291	1.66	22x50
250	470	477LMX250M2CF	0.5291	1.61	25x40
250	470	477LMX250M2CG	0.5291	1.7	25x45
250	470	477LMX250M2DD	0.5291	1.59	30x30
250	470	477LMX250M2DE	0.5291	1.69	30x35
250	470	477LMX250M2EC	0.5291	1.63	35x25
250	560	567LMX250M2CG	0.4441	1.85	25x45
250	560	567LMX250M2DE	0.4441	1.85	30x35
250	560	567LMX250M2DF	0.4441	1.95	30x40
250	560	567LMX250M2ED	0.4441	1.91	35x30
250	680	687LMX250M2CH	0.3657	1.94	25x50
250	680	687LMX250M2DF	0.3657	2.15	30x40
250	680	687LMX250M2DG	0.3657	2.26	30x45
250	680	687LMX250M2ED	0.3657	2.1	35x30
250	820	827LMX250M2DG	0.3033	2.49	30x45
250	820	827LMX250M2DH	0.3033	2.6	30x50
250	820	827LMX250M2EE	0.3033	2.45	35x35
250	1000	108LMX250M2DH	0.2487	2.68	30x50
250	1000	108LMX250M2DP	0.2487	3	30x55
250	1000	108LMX250M2EF	0.2487	2.86	35x40
250	1200	128LMX250M2EG	0.2072	3.05	35x45
250	1200	128LMX250M2EH	0.2072	3.44	35x50
250	1200	128LMX250M2EP	0.2072	3.58	35x55
250	1500	158LMX250M2EH	0.1658	3.49	35x50
250	1500	158LMX250M2EP	0.1658	4	35x55
350	120	127LMX350M2BD	2.7631	0.78	22x30
350	150	157LMX350M2BE	2.2105	0.9	22x35
350	180	187LMX350M2BF	1.8421	1.01	22x40
350	180	187LMX350M2CD	1.8421	1.01	25x30
350	220	227LMX350M2BG	1.5071	1.15	22x45
350	220	227LMX350M2CE	1.5071	1.15	25x35
350	220	227LMX350M2DD	1.5071	1.15	30x30
350	270	277LMX350M2BH	1.228	1.25	22x50
350	270	277LMX350M2CF	1.228	1.25	25x40
350	270	277LMX350M2DD	1.228	1.25	30x30
350	270	277LMX350M2EC	1.228	1.25	35x25
350	330	337LMX350M2CG	1.0048	1.43	25x45
350	330	337LMX350M2DE	1.0048	1.43	30x35
350	330	337LMX350M2ED	1.0048	1.43	35x30
350	390	397LMX350M2CH	1.0048	1.61	25x50
350	390	397LMX350M2DF	1.0048	1.6	30x40
350	390	397LMX350M2ED	1.0048	1.61	35x30
350	390	397LMX350M2EE	1.0048	1.76	35x35
350	470	477LMX350M2DG	0.7055	1.81	30x45
350	470	477LMX350M2EE	0.7055	1.83	35x35
350	560	567LMX350M2DH	0.5921	2	30x50
350	560	567LMX350M2EF	0.5921	2.07	35x40
350	680	687LMX350M2EG	0.4876	2.34	35x45
350	820	827LMX350M2EH	0.4044	2.62	35x50
400	68	686LMX400M2BC	4.8761	0.47	22x25
400	82	826LMX400M2BC	4.0436	0.52	22x25
400	82	826LMX400M2BD	4.0436	0.56	22x30
400	100	107LMX400M2BD	3.3157	0.62	22x30

Americas / EU
Phone: 1-508-996-8561
Email: cdena@cde.com

CDE ENERGIZING IDEAS
CORNELL DUBILIER
ILLINOIS CAPACITOR

Asia
Phone: 852-2793-0931
Email: cdeasia@cde.com

LMX

+105°C, Long Life, 5000 Hour

WVDC	Capacitance (µF)	IC PART NUMBER	Maximum ESR (Ω) 120 Hz, +20°C	Maximum RMS Ripple Current (A) 120 Hz, +105°C	Dims DxL (mm)
400	100	107LMX400M2BE3.3157		0.66	22x35
400	100	107LMX400M2CC3.3157		0.62	25x25
400	100	107LMX400M2CD	3.3157	0.66	25x30
400	120	127LMX400M2BE	2.7631	0.72	22x35
400	120	127LMX400M2BF	2.7631	0.76	22x40
400	120	127LMX400M2CD	2.7631	0.73	25x30
400	120	127LMX400M2CE	2.7631	0.77	25x35
400	120	127LMX400M2DC	2.7631	0.75	30x25
400	150	157LMX400M2BF	2.2105	0.85	22x40
400	150	157LMX400M2BG	2.2105	0.9	22x45
400	150	157LMX400M2CD	2.2105	0.81	25x30
400	150	157LMX400M2CE	2.2105	0.91	25x35
400	150	157LMX400M2CF	2.2105	0.92	25x40
400	150	157LMX400M2DC	2.2105	0.84	30x25
400	150	157LMX400M2DD	2.2105	0.9	30x30
400	180	187LMX400M2BG	1.8421	0.98	22x45
400	180	187LMX400M2BH	1.8421	1.03	22x50
400	180	187LMX400M2CE	1.8421	0.95	25x35
400	180	187LMX400M2CF	1.8421	1.06	25x40
400	180	187LMX400M2DD	1.8421	1.1	30x30
400	180	187LMX400M2DE	1.8421	1.06	30x35
400	180	187LMX400M2EC	1.8421	1.01	35x25
400	220	227LMX400M2BH	1.5071	1.14	22x50
400	220	227LMX400M2CF	1.5071	1.11	25x40
400	220	227LMX400M2CH	1.5071	1.22	25x50
400	220	227LMX400M2DD	1.5071	1.09	30x30
400	220	227LMX400M2DE	1.5071	1.16	30x35
400	220	227LMX400M2ED	1.5071	1.2	35x30
400	270	277LMX400M2CG	1.228	1.29	25x45
400	270	277LMX400M2CH	1.228	1.35	25x50
400	270	277LMX400M2DE	1.228	1.29	30x35
400	270	277LMX400M2DG	1.228	1.43	30x45
400	270	277LMX400M2ED	1.228	1.33	35x30
400	270	277LMX400M2EE	1.228	1.41	35x35
400	330	337LMX400M2DF	1.0048	1.51	30x40
400	330	337LMX400M2DG	1.0048	1.55	30x45
400	330	337LMX400M2DH	1.0048	1.66	30x50
400	330	337LMX400M2ED	1.0048	1.52	35x30
400	330	337LMX400M2EE	1.0048	1.56	35x35
400	330	337LMX400M2EF	1.0048	1.65	35x40
400	390	397LMX400M2DG	1.0048	1.72	30x45
400	390	397LMX400M2EE	1.0048	1.7	35x35
400	390	397LMX400M2EG	1.0048	1.88	35x45
400	470	477LMX400M2DH	0.7055	1.9	30x50
400	470	477LMX400M2EF	0.7055	1.97	35x40
400	470	477LMX400M2EH	0.7055	2.16	35x50
400	560	567LMX400M2EG	0.3657	2.26	35x45
400	680	687LMX400M2EH	0.4876	2.39	35x50
450	47	476LMX450M2BC	7.0547	0.39	22x25
450	56	566LMX450M2BC	5.9209	0.42	22x25
450	56	566LMX450M2BD	5.9209	0.46	22x30
450	68	686LMX450M2BD	4.8761	0.5	22x30
450	68	686LMX450M2BE	4.8761	0.54	22x35
450	68	686LMX450M2CC	3.657	0.5	25x25
450	82	826LMX450M2BD	4.0436	0.55	22x30

WVDC	Capacitance (µF)	IC PART NUMBER	Maximum ESR (Ω) 120 Hz, +20°C	Maximum RMS Ripple Current (A) 120 Hz, +105°C	Dims DxL (mm)
450	82	826LMX450M2BE	4.0436	0.59	22x35
450	82	826LMX450M2CC	4.0436	0.55	25x25
450	82	826LMX450M2CD	4.0436	0.6	25x30
450	100	107LMX450M2BE	3.3157	0.65	22x35
450	100	107LMX450M2BF	3.3157	0.69	22x40
450	100	107LMX450M2CD	3.3157	0.66	25x30
450	100	107LMX450M2CE	3.3157	0.7	25x35
450	100	107LMX450M2DC	3.3157	0.68	30x25
450	120	127LMX450M2BF	2.7631	0.76	22x40
450	120	127LMX450M2BH	2.7631	0.84	22x50
450	120	127LMX450M2CE	2.7631	0.77	25x35
450	120	127LMX450M2CF	2.7631	0.81	25x40
450	120	127LMX450M2DC	2.7631	0.75	30x25
450	120	127LMX450M2DD	2.7631	0.8	30x30
450	120	127LMX450M2EC	2.7631	0.82	35x25
450	150	157LMX450M2BG	2.2105	0.93	22x45
450	150	157LMX450M2BH	2.2105	0.94	22x50
450	150	157LMX450M2CE	2.2105	0.94	25x35
450	150	157LMX450M2CF	2.2105	0.91	25x40
450	150	157LMX450M2CG	2.2105	0.96	25x45
450	150	157LMX450M2DD	2.2105	0.9	30x30
450	150	157LMX450M2DE	2.2105	0.96	30x35
450	150	157LMX450M2ED	2.2105	0.99	35x30
450	180	187LMX450M2BH	1.8421	0.97	22x50
450	180	187LMX450M2CF	1.8421	0.95	25x40
450	180	187LMX450M2CG	1.8421	1.05	25x45
450	180	187LMX450M2DD	1.8421	0.93	30x30
450	180	187LMX450M2DE	1.8421	1.05	30x35
450	180	187LMX450M2DF	1.8421	1.11	30x40
450	180	187LMX450M2EC	1.8421	0.96	35x25
450	180	187LMX450M2ED	1.8421	1.08	35x30
450	220	227LMX450M2CG	1.5071	1.16	25x45
450	220	227LMX450M2DE	1.5071	1.17	30x35
450	220	227LMX450M2DF	1.5071	1.22	30x40
450	220	227LMX450M2DG	1.5071	1.29	30x45
450	220	227LMX450M2ED	1.5071	1.19	35x30
450	220	227LMX450M2EE	1.5071	1.27	35x35
450	270	277LMX450M2CH	1.228	1.31	25x50
450	270	277LMX450M2DF	1.228	1.33	30x40
450	270	277LMX450M2DG	1.228	1.43	30x45
450	270	277LMX450M2DH	1.228	1.49	30x50
450	270	277LMX450M2ED	1.228	1.39	35x30
450	270	277LMX450M2EE	1.228	1.41	35x35
450	270	277LMX450M2EF	1.228	1.48	35x40
450	330	337LMX450M2DG	1.0048	1.58	30x45
450	330	337LMX450M2DH	1.0048	1.65	30x50
450	330	337LMX450M2EE	1.0048	1.58	35x35
450	330	337LMX450M2EF	1.0048	1.64	35x40
450	330	337LMX450M2EG	1.0048	1.72	35x45
450	390	397LMX450M2DH	1.0048	1.73	30x50
450	390	397LMX450M2EE	1.0048	1.71	35x35
450	390	397LMX450M2EF	1.0048	1.73	35x40
450	390	397LMX450M2EG	1.0048	1.87	35x45
450	470	477LMX450M2EH	0.7055	1.98	35x50

Americas / EU
Phone: 1-508-996-8561
Email: cdena@cde.com

CDE CORNELL DUBILIER
ENERGIZING IDEAS
ILLINOIS CAPACITOR

Asia
Phone: 852-2793-0931
Email: cdeasia@cde.com

click here to see hardware and mounting options

Type 500C 95 °C Long Life, Screw Terminal, Aluminum

Long Life, High Capacitance Screw Terminal Type

Type 500C capacitors are designed for mainframe computers and other long life UPS and power supply filter applications. They deliver nearly as much capacitance as the Type DCMC capacitors, but with two times the life expectancy. They are an excellent choice for high ripple applications. The extended cathode foil of the 500C assures cool operation with heat flow from the capacitor element to the can.

Highlights

- Long-life, High-Capacitance
- Better for Power-supply and UPS systems
- Thermal-Pak™ extended cathode construction

Specifications

Temperature Range	–40 °C to +95 °C
Rated Voltage Range	6.3 Vdc to 500 Vdc
Capacitance Range	100 µF to 2.6 F
Capacitance Tolerance	–10% +75% ≤ 100 Vdc –10% +50% ≥ 160 Vdc
Leakage Current	≤3 $\sqrt{CV}$ µA, 4 mA max, 5 minutes
Ripple Current Multipliers	Ambient Temperature

45 °C	55 °C	65 °C	75 °C	85 °C
2.00	1.82	1.59	1.33	1.00

Frequency	50 Hz	60 Hz	120 Hz	360 Hz	1 kHz	5 kHz	10 kHz & up
1 3/8" & 1 3/4" Diameters							
6.3 to 160 V	0.91	0.93	1.00	1.06	1.08	1.10	1.10
200 to 350 V	0.76	0.81	1.00	1.24	1.36	1.43	1.44
400 to 500 Vx	0.76	0.81	1.00	1.24	1.37	1.44	1.45
2" & 2 1/2" Diameters							
6.3 to 160 V	0.93	0.95	1.00	1.04	1.06	1.06	1.07
200 to 350 V	0.78	0.83	1.00	1.20	1.29	1.34	1.35
400 to 500 V	0.77	0.82	1.00	1.22	1.33	1.39	1.40
3" & 3 1/2" Diameters							
6.3 to 160 V	0.95	0.97	1.00	1.03	1.04	1.04	1.04
200 to 350 V	0.84	0.88	1.00	1.12	1.17	1.20	1.20
400 to 500 V	0.79	0.84	1.00	1.18	1.26	1.31	1.32

Low Temperature Characteristics	Impedance ratio: $Z_{-20°C}/Z_{+25°C}$ ≤ 20 (6.3–10 Vdc) ≤ 8 (16–50 Vdc) ≤ 4 (63–100 Vdc) ≤ 3 (150–550 Vdc)
Endurance Life Test	5000 h at full load at 85 °C Δ Capacitance ±20% ESR 200% of limit DCL 100% of limit
Shelf Life Test	500 h at 95 °C Capacitance 100% of limit ESR 100% of limit DCL 100% of limit
Vibration	10 to 55 Hz, 0.06" and 10 g max, 1.5 h each of 2 axes
RoHS Compliant	

Type 500C 95 °C Long Life, Screw Terminal, Aluminum

Long Life, High Capacitance Screw Terminal Type

Part Numbering System

500C	492	T	200	CB	2	B	S
Type	**Capacitance**	**Tolerance**	**Voltage**	**Case Code**	**Insulation**	**Terminal**	**Can Style**
	100 = 10 µF **101** = 100 µF **492** = 4900 µF **433**= 43,000 µF	**M** = ±20% **U** = –10%+75% **T** = –10%+50%	**6R3** = 6.3 Vdc **063** = 63 Vdc **200** = 200 Vdc		**0**= None **1**= Polyester **2**= PVC	**A** = Low Post **B** = High Post **D** = High Current, Low Post **E** = High Current, High Post **F or M** = M5 Post **G** = M6 Low Post **H** = M6 High Post	**Blank**= Standard Can **S**= Stud Bottom **P**= Stud with Thermal Pad

Standard insulation is 0.008-in PVC sleeve with 0.01-in polypropylene end disk.
Polyester insulation is not available for 3.5 inch diameter units.

Outline Drawing

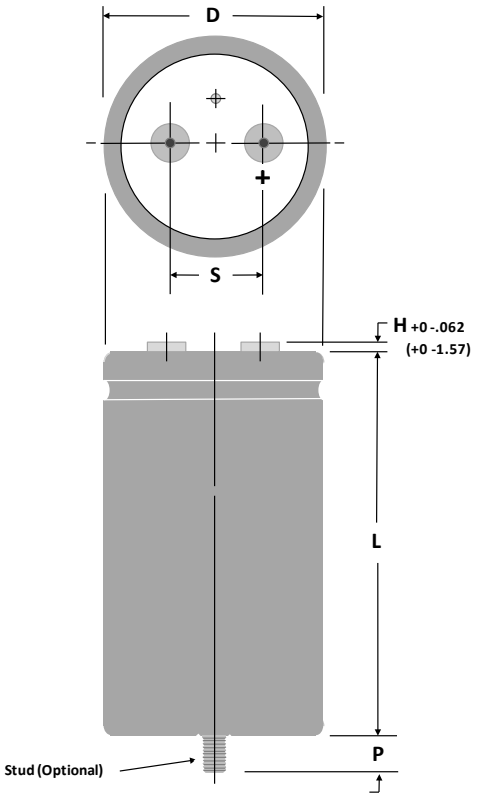

NOTE: With the stud-mount feature, a thermally-conductive disk can be inserted in the bottom flush with the outer insulating sleeve.This reduces the thermal resistance through the can bottom by 0.3 °C/W. Can Style P.

Stud Dimensions

Case Diam.	Stud Thread	P± 0.039" (±1.0 mm)
1.375	M8	0.470" (12.0)
1.750	M8	0.470" (12.0)
2.000	M12	0.630" (16.0)
2.500	M12	0.630" (16.0)
3.000	M12	0.630" (16.0)
3.500	M12	0.630" (16.0)

Terminal Dimensions

Terminal Style	For Case Diameters	Code	Post Diameter in	Post Diameter mm	H max in	H max mm	Thread	min Full Thread in	min Full Thread mm	Torque in·lb	Torque N·m
Low Post	1⅜ to 3	A	0.314	8.0	0.094	2.4	10–32	0.218	5.5	25	2.82
High Post	1⅜ to 3	B	0.314	8.0	0.281	7.1	10–32	0.375	9.5	25	2.82
High Current, Low	2½ to 3½	D	0.684	17.4	0.125	3.2	¼–28	0.344	8.7	50	5.65
High Current, High	2½ to 3½	E	0.684	17.4	0.281	7.1	¼–28	0.469	11.9	60	6.78
M5 Post, Small	1⅜ to 2	M	0.314	8.0	0.281	7.1	M5	0.375	9.5	25	2.82
M5 Post	2½ & 3	F	0.512	13.0	0.230	5.8	M5	0.344	8.7	25	2.82
M6 Low Post	2½ to 3½	G	0.684	17.4	0.125	3.2	M6	0.344	8.7	50	5.65
M6 High Post	2½ to 3½	H	0.684	17.4	0.281	7.1	M6	0.469	11.9	60	6.78

NOTE: Only high post and M5 post terminals are available at 550 Vdc as they meet the required creepage distance.

Type 500C 95 °C Long Life, Screw Terminal, Aluminum

Long Life, High Capacitance Screw Terminal Type

Uninsulated Case Dimensions

For insulated case, add 0.024"(0.610 mm) to "D"and 0.030"(0.762 mm) to length.

	Diam. (D)		Length (L)		Terminals (S)		Typical Weight	
Case Code	±.031 Inches	±.78 mm	±.062 Inches	±1.57 mm	±0.015 Inches	±.38 mm	oz	g
AK	1.375	34.93	1.625	41.28	0.50	12.70	1.9	54
AA	1.375	34.93	2.125	53.98	0.50	12.70	2.0	57
AH	1.375	34.93	2.625	66.68	0.50	12.70	2.7	77
AB	1.375	34.93	3.125	79.38	0.50	12.70	3.3	94
AJ	1.375	34.93	3.625	92.08	0.50	12.70	3.8	108
AC	1.375	34.93	4.125	104.78	0.50	12.70	4.4	125
AD	1.375	34.93	4.625	117.48	0.50	12.70	5.1	145
AE	1.375	34.93	5.125	130.18	0.50	12.70	6.8	193
AF	1.375	34.93	5.625	142.88	0.50	12.70	8.1	230
EA	1.750	44.45	2.125	53.98	0.75	19.05	2.7	76
EH	1.750	44.45	2.625	66.68	0.75	19.05	3.8	108
EB	1.750	44.45	3.125	79.38	0.75	19.05	5.1	145
EJ	1.750	44.45	3.625	92.08	0.75	19.05	6.8	193
EC	1.750	44.45	4.125	104.78	0.75	19.05	8.1	230
ED	1.750	44.45	4.625	117.48	0.75	19.05	9.0	255
EE	1.750	44.45	5.125	130.18	0.75	19.05	9.5	269
EF	1.750	44.45	5.625	142.88	0.75	19.05	10.5	298
BA	2.000	50.80	2.125	53.98	0.88	22.23	5.4	153
BH	2.000	50.80	2.625	66.68	0.88	22.23	6.1	173
BB	2.000	50.80	3.125	79.38	0.88	22.23	6.8	193
BJ	2.000	50.80	3.625	92.08	0.88	22.23	8.2	232
BC	2.000	50.80	4.125	104.78	0.88	22.23	9.5	269
BD	2.000	50.80	4.625	117.48	0.88	22.23	10.3	292
BE	2.000	50.80	5.125	130.18	0.88	22.23	10.7	303
BF	2.000	50.80	5.625	142.88	0.88	22.23	13.0	369
CH	2.500	63.50	2.625	66.68	1.13	28.58	9.2	261
CB	2.500	63.50	3.125	79.38	1.13	28.58	10.4	295
CJ	2.500	63.50	3.625	92.08	1.13	28.58	12.7	361
CC	2.500	63.50	4.125	104.78	1.13	28.58	15.0	425
CD	2.500	63.50	4.625	117.48	1.13	28.58	17.2	488
CE	2.500	63.50	5.125	130.18	1.13	28.58	19.3	547
CF	2.500	63.50	5.625	142.88	1.13	28.58	21.4	607
DB	3.000	76.20	3.125	79.38	1.25	31.75	16.7	473
DJ	3.000	76.20	3.625	92.08	1.25	31.75	20.0	567
DC	3.000	76.20	4.125	104.78	1.25	31.75	22.2	629
DD	3.000	76.20	4.625	117.48	1.25	31.75	25.5	723
DE	3.000	76.20	5.125	130.18	1.25	31.75	30.0	850
DF	3.000	76.20	5.625	142.88	1.25	31.75	31.9	904
DP	3.000	76.20	5.875	149.23	1.25	31.75	32.8	931
DN	3.000	76.20	7.625	193.68	1.25	31.75	39.5	1119
DG	3.000	76.20	8.625	219.08	1.25	31.75	43.3	1227
FC	3.500	88.90	4.125	104.78	1.25	31.75	30.0	850
FD	3.500	88.90	4.625	117.48	1.25	31.75	34.4	976
FE	3.500	88.90	5.125	130.18	1.25	31.75	40.5	1148
FF	3.500	88.90	5.625	142.88	1.25	31.75	43.1	1221
FP	3.500	88.90	5.875	149.23	1.25	31.75	44.3	1257
FN	3.500	88.90	7.625	193.68	1.25	31.75	53.3	1512
FG	3.500	88.90	8.625	219.08	1.25	31.75	58.5	1658

Type 500C 95 °C Long Life, Screw Terminal, Aluminum

Long Life, High Capacitance Screw Terminal Type

Ratings

Cap. (µF)	Catalog Part Number	ESR Max. @ 25 °C 120 Hz (mΩ)	Ripple Max. @ 85°C 120 Hz (A)	Nominal Size D x L (inches)
6.3 Vdc (8 Vdc Surge)				
27000	500C273U6R3AK2B	46.9	4.70	1 3/8 x 1 5/8
55000	500C553U6R3AA2B	26.5	6.90	1 3/8 x 2 1/8
66000	500C663U6R3AH2B	18.8	8.90	1 3/8 x 2 5/8
87000	500C873U6R3AB2B	14.7	10.70	1 3/8 x 3 1/8
96000	500C963U6R3EA2B	18.8	9.60	1 3/4 x 2 1/8
110000	500C114U6R3AJ2B	12.8	12.10	1 3/8 x 3 5/8
120000	500C124U6R3EH2B	14.3	11.80	1 3/4 x 2 5/8
120000	500C124U6R3BA2B	14.2	12.00	2 x 2 1/8
130000	500C134U6R3AC2B	11.0	13.70	1 3/8 x 4 1/8
140000	500C144U6R3BH2B	9.9	15.50	2 x 2 5/8
150000	500C154U6R3AD2B	9.8	15.20	1 3/8 x 4 5/8
160000	500C164U6R3EB2B	11.0	14.30	1 3/4 x 3 1/8
170000	500C174U6R3AE2B	8.9	16.50	1 3/8 x 5 1/8
190000	500C194U6R3AF2B	8.3	17.80	1 3/8 x 5 5/8
190000	500C194U6R3EJ2B	9.1	16.60	1 3/4 x 3 5/8
200000	500C204U6R3BB2B	7.8	18.40	2 x 3 1/8
230000	500C234U6R3EC2B	7.9	18.70	1 3/4 x 4 1/8
250000	500C254U6R3BJ2B	6.5	21.40	2 x 3 5/8
250000	500C254U6R3CH2B	6.9	21.20	2 1/2 x 2 5/8
270000	500C274U6R3ED2B	7.0	20.60	1 3/4 x 4 5/8
300000	500C304U6R3BC2B	5.6	24.10	2 x 4 1/8
310000	500C314U6R3EE2B	6.4	22.40	1 3/4 x 5 1/8
340000	500C344U6R3CB2B	5.3	25.80	2 1/2 x 3 1/8
350000	500C354U6R3EF2B	6.0	24.00	1 3/4 x 5 5/8
360000	500C364U6R3BD2B	5.0	26.60	2 x 4 5/8
410000	500C414U6R3BE2B	4.5	28.80	2 x 5 1/8
420000	500C424U6R3CJ2B	4.3	29.90	2 1/2 x 3 5/8
450000	500C454U6R3BF2D	4.2	30.90	2 x 5 5/8
500000	500C504U6R3DB2D	4.1	32.90	3 x 3 1/8
510000	500C514U6R3CC2D	3.8	33.40	2 1/2 x 4 1/8
580000	500C584U6R3CD2D	3.4	36.80	2 1/2 x 4 5/8
620000	500C624U6R3DJ2D	3.3	38.20	3 x 3 5/8
680000	500C684U6R3CE2D	3.1	40.00	2 1/2 x 5 1/8
740000	500C744U6R3DC2D	2.9	42.50	3 x 4 1/8
760000	500C764U6R3CF2D	2.8	42.90	2 1/2 x 5 5/8
880000	500C884U6R3DD2D	2.6	46.70	3 x 4 5/8
980000	500C984U6R3DE2D	2.4	50.60	3 x 5 1/8
1100000	500C115U6R3DF2D	2.4	51.30	3 x 5 5/8
1100000	500C115U6R3FC2D	3.0	46.40	3 1/2 x 4 1/8
1100000	500C115U6R3FD2D	2.6	51.00	3 1/2 x 4 5/8
1200000	500C125U6R3DP2D	2.4	52.00	3 x 5 7/8
1400000	500C145U6R3FE2D	2.4	55.40	3 1/2 x 5 1/8
1600000	500C165U6R3FF2D	2.4	56.10	3 1/2 x 5 5/8

Cap. (µF)	Catalog Part Number	ESR Max. @ 25 °C 120 Hz (mΩ)	Ripple Max. @ 85°C 120 Hz (A)	Nominal Size D x L (inches)
6.3 Vdc (8 Vdc Surge)				
1600000	500C165U6R3DN2D	2.6	55.90	3 x 7 5/8
1700000	500C175U6R3FP2D	2.4	57.00	3 1/2 x 5 7/8
1800000	500C185U6R3DG2D	2.4	58.60	3 x 8 5/8
2300000	500C235U6R3FN2D	2.4	61.70	3 1/2 x 7 5/8
2600000	500C265U6R3FG2D	2.4	64.40	3 1/2 x 8 5/8
10 Vdc (12 Vdc Surge)				
22000	500C223U010AK2B	46.9	4.70	1 3/8 x 1 5/8
39000	500C393U010AA2B	26.5	6.90	1 3/8 x 2 1/8
52000	500C523U010AH2B	20.1	8.60	1 3/8 x 2 5/8
70000	500C703U010AB2B	15.5	10.50	1 3/8 x 3 1/8
71000	500C713U010EA2B	18.8	9.60	1 3/4 x 2 1/8
87000	500C873U010AJ2B	12.8	12.10	1 3/8 x 3 5/8
95000	500C953U010EH2B	14.3	11.80	1 3/4 x 2 5/8
100000	500C104U010AC2B	11.0	13.70	1 3/8 x 4 1/8
100000	500C104U010BA2B	17.6	10.70	2 x 2 1/8
120000	500C124U010AD2B	9.8	15.20	1 3/8 x 4 5/8
130000	500C134U010EB2B	11.0	14.30	1 3/4 x 3 1/8
130000	500C134U010BH2B	13.4	13.30	2 x 2 5/8
140000	500C144U010AE2B	8.9	16.50	1 3/8 x 5 1/8
160000	500C164U010AF2B	8.3	17.80	1 3/8 x 5 5/8
160000	500C164U010EJ2B	9.1	16.60	1 3/4 x 3 5/8
160000	500C164U010BB2B	10.5	16.00	2 x 3 1/8
190000	500C194U010EC2B	7.9	18.70	1 3/4 x 4 1/8
200000	500C204U010BJ2B	8.7	18.50	2 x 3 5/8
200000	500C204U010CH2B	8.8	18.90	2 1/2 x 2 5/8
220000	500C224U010ED2B	7.0	20.60	1 3/4 x 4 5/8
240000	500C244U010BC2B	7.5	20.80	2 x 4 1/8
250000	500C254U010EE2B	6.4	22.40	1 3/4 x 5 1/8
270000	500C274U010CB2B	6.7	22.90	2 1/2 x 3 1/8
280000	500C284U010EF2B	6.0	24.00	1 3/4 x 5 5/8
280000	500C284U010BD2B	6.7	22.90	2 x 4 5/8
320000	500C324U010BE2B	6.1	24.80	2 x 5 1/8
340000	500C344U010CJ2B	5.5	26.50	2 1/2 x 3 5/8
360000	500C364U010BF2B	5.7	26.50	2 x 5 5/8
400000	500C404U010DB2D	4.1	32.90	3 x 3 1/8
410000	500C414U010CC2B	4.8	29.60	2 1/2 x 4 1/8
480000	500C484U010CD2D	4.3	32.60	2 1/2 x 4 5/8
500000	500C504U010DJ2D	3.3	38.20	3 x 3 5/8
550000	500C554U010CE2D	3.9	35.30	2 1/2 x 5 1/8
600000	500C604U010DC2D	2.9	42.50	3 x 4 1/8
610000	500C614U010CF2D	3.6	37.90	2 1/2 x 5 5/8
700000	500C704U010DD2D	2.6	46.70	3 x 4 5/8
800000	500C804U010DE2D	2.4	50.60	3 x 5 1/8

Type 500C 95 °C Long Life, Screw Terminal, Aluminum

Long Life, High Capacitance Screw Terminal Type

Cap. (µF)	Catalog Part Number	ESR Max. @ 25 °C 120 Hz (mΩ)	Ripple Max. @ 85°C 120 Hz (A)	Nominal Size D x L (inches)
830000	500C834U010FC2D	2.9	47.30	3 1/2 x 4 1/8
870000	500C874U010DF2D	2.3	53.00	3 x 5 5/8
930000	500C934U010DP2D	2.3	53.30	3 x 5 7/8
970000	500C974U010FD2D	2.8	49.60	3 1/2 x 4 5/8
1100000	500C115U010FE2D	2.5	54.50	3 1/2 x 5 1/8
1200000	500C125U010FF2D	2.2	59.00	3 1/2 x 5 5/8
1300000	500C135U010FP2D	2.1	60.80	3 1/2 x 5 7/8
1300000	500C135U010DN2D	2.1	60.10	3 x 7 5/8
1500000	500C155U010DG2D	2.1	63.70	3 x 8 5/8
1700000	500C175U010FN2D	1.8	73.40	3 1/2 x 7 5/8
2000000	500C205U010FG2D	1.5	80.50	3 1/2 x 8 5/8
16 Vdc (20 Vdc Surge)				
15000	500C153U016AK2B	46.9	4.7	1 3/8 x 1 5/8
27000	500C273U016AA2B	26.5	6.9	1 3/8 x 2 1/8
36000	500C363U016AH2B	20.1	8.6	1 3/8 x 2 5/8
48000	500C483U016AB2B	15.5	10.5	1 3/8 x 3 1/8
49000	500C493U016EA2B	18.8	9.6	1 3/4 x 2 1/8
61000	500C613U016AJ2B	12.8	12.1	1 3/8 x 3 5/8
66000	500C663U016EH2B	15.3	11.4	1 3/4 x 2 5/8
71000	500C713U016BA2B	17.6	10.7	2 x 2 1/8
73000	500C733U016AC2B	11.0	13.7	1 3/8 x 4 1/8
85000	500C853U016AD2B	9.8	15.20	1 3/8 x 4 5/8
88000	500C883U016EB2B	12.5	13.50	1 3/4 x 3 1/8
90000	500C903U016BH2B	13.4	13.30	2 x 2 5/8
97000	500C973U016AE2B	8.9	16.50	1 3/8 x 5 1/8
110000	500C114U016AF2B	8.3	17.80	1 3/8 x 5 5/8
110000	500C114U016EJ2B	10.9	15.20	1 3/4 x 3 5/8
110000	500C114U016BB2B	10.5	16.00	2 x 3 1/8
130000	500C134U016EC2B	9.7	16.90	1 3/4 x 4 1/8
140000	500C144U016BJ2B	8.7	18.50	2 x 3 5/8
140000	500C144U016CH2B	8.8	18.90	2 1/2 x 2 5/8
150000	500C154U016ED2B	8.8	18.50	1 3/4 x 4 5/8
170000	500C174U016BC2B	7.5	20.80	2 x 4 1/8
180000	500C184U016EE2B	8.2	19.90	1 3/4 x 5 1/8
190000	500C194U016CB2B	6.7	22.90	2 1/2 x 3 1/8
200000	500C204U016EF2B	7.8	21.10	1 3/4 x 5 5/8
200000	500C204U016BD2B	6.7	22.90	2 x 4 5/8
220000	500C224U016BE2B	6.1	24.80	2 x 5 1/8
230000	500C234U016CJ2B	5.5	26.50	2 1/2 x 3 5/8
250000	500C254U016BF2B	5.7	26.50	2 x 5 5/8
280000	500C284U016CC2B	5.0	29.20	2 1/2 x 4 1/8
280000	500C284U016DB2D	4.2	32.40	3 x 3 1/8
320000	500C324U016CD2D	4.6	31.40	2 1/2 x 4 5/8
350000	500C354U016DJ2D	3.6	36.80	3 x 3 5/8

Cap. (µF)	Catalog Part Number	ESR Max. @ 25 °C 120 Hz (mΩ)	Ripple Max. @ 85°C 120 Hz (A)	Nominal Size D x L (inches)
370000	500C374U016CE2D	4.4	33.40	2 1/2 x 5 1/8
420000	500C424U016CF2D	4.2	35.20	2 1/2 x 5 5/8
420000	500C424U016DC2D	3.3	40.20	3 x 4 1/8
490000	500C494U016DD2D	3.1	42.80	3 x 4 5/8
550000	500C554U016DE2D	2.8	46.20	3 x 5 1/8
600000	500C604U016FC2D	2.9	47.30	3 1/2 x 4 1/8
610000	500C614U016DF2D	2.8	48.10	3 x 5 5/8
640000	500C644U016DP2D	2.8	48.80	3 x 5 7/8
700000	500C704U016FD2D	2.8	49.70	3 1/2 x 4 5/8
800000	500C804U016FE2D	2.5	54.40	3 1/2 x 5 1/8
870000	500C874U016FF2D	2.4	56.70	3 1/2 x 5 5/8
870000	500C874U016DN2D	2.6	54.10	3 x 7 5/8
920000	500C924U016FP2D	2.4	57.30	3 1/2 x 5 7/8
1000000	500C105U016DG2D	2.6	57.10	3 x 8 5/8
1300000	500C135U016FN2D	2.3	63.10	3 1/2 x 7 5/8
1500000	500C155U016FG2D	2.3	66.40	3 1/2 x 8 5/8
25 Vdc (30 Vdc Surge)				
11000	500C113U025AK2B	37.1	5.30	1 3/8 x 1 5/8
18000	500C183U025AA2B	23.6	7.40	1 3/8 x 2 1/8
26000	500C263U025AH2B	16.9	9.40	1 3/8 x 2 5/8
33000	500C333U025EA2B	21.8	8.90	1 3/4 x 2 1/8
34000	500C343U025AB2B	17.1	10.00	1 3/8 x 3 1/8
39000	500C393U025EH2B	19.4	10.20	1 3/4 x 2 5/8
43000	500C433U025AJ2B	17.7	10.30	1 3/8 x 3 5/8
47000	500C473U025BA2B	21.8	9.70	2 x 2 1/8
51000	500C513U025AC2B	16.3	11.30	1 3/8 x 4 1/8
53000	500C533U025BH2B	16.5	12.00	2 x 2 5/8
54000	500C543U025EB2B	15.2	12.20	1 3/4 x 3 1/8
60000	500C603U025AD2B	15.4	12.10	1 3/8 x 4 5/8
69000	500C693U025AE2B	14.4	13.00	1 3/8 x 5 1/8
69000	500C693U025BB2B	12.2	14.80	2 x 3 1/8
70000	500C703U025EJ2B	12.8	14.10	1 3/4 x 3 5/8
77000	500C773U025AF2B	13.4	14.00	1 3/8 x 5 5/8
82000	500C823U025CH2B	9.5	18.10	2 1/2 x 2 5/8
86000	500C863U025EC2B	11.2	15.70	1 3/4 x 4 1/8
89000	500C893U025BJ2B	9.8	17.40	2 x 3 5/8
100000	500C104U025ED2B	10.2	17.10	1 3/4 x 4 5/8
110000	500C114U025BC2B	8.3	19.70	2 x 4 1/8
110000	500C114U025CB2B	7.6	21.50	2 1/2 x 3 1/8
120000	500C124U025EE2B	9.6	18.40	1 3/4 x 5 1/8
130000	500C134U025EF2B	9.1	19.50	1 3/4 x 5 5/8
130000	500C134U025BD2B	7.3	21.90	2 x 4 5/8
150000	500C154U025BE2B	6.6	23.90	2 x 5 1/8
150000	500C154U025CJ2B	6.4	24.60	2 1/2 x 3 5/8

Type 500C 95 °C Long Life, Screw Terminal, Aluminum

Long Life, High Capacitance Screw Terminal Type

Cap. (µF)	Catalog Part Number	ESR Max. @ 25 °C 120 Hz (mΩ)	Ripple Max. @ 85°C 120 Hz (A)	Nominal Size D x L (inches)
170000	500C174U025BF2B	6.1	25.70	2 x 5 5/8
170000	500C174U025DB2B	5.0	29.70	3 x 3 1/8
180000	500C184U025CC2B	5.8	27.00	2 1/2 x 4 1/8
210000	500C214U025CD2B	5.2	29.50	2 1/2 x 4 5/8
220000	500C224U025DJ2D	4.3	31.10	3 x 3 5/8
250000	500C254U025CE2D	5.0	33.60	2 1/2 x 5 1/8
270000	500C274U025DC2D	3.9	36.90	3 x 4 1/8
280000	500C284U025CF2D	4.6	33.70	2 1/2 x 5 5/8
320000	500C324U025DD2D	3.5	40.00	3 x 4 5/8
370000	500C374U025DE2D	3.3	42.70	3 x 5 1/8
390000	500C394U025FC2D	3.8	40.90	3 1/2 x 4 1/8
420000	500C424U025DF2D	3.2	44.90	3 x 5 5/8
440000	500C444U025DP2D	3.1	46.50	3 x 5 7/8
460000	500C464U025FD2D	3.5	44.40	3 1/2 x 4 5/8
530000	500C534U025FE2D	3.2	47.40	3 1/2 x 5 1/8
600000	500C604U025FF2D	3.1	50.20	3 1/2 x 5 5/8
610000	500C614U025DN2D	3.1	50.20	3 x 7 5/8
630000	500C634U025FP2D	2.9	51.80	3 1/2 x 5 7/8
710000	500C714U025DG2D	3.0	52.80	3 x 8 5/8
870000	500C874U025FN2D	3.0	55.60	3 1/2 x 7 5/8
1000000	500C105U025FG2D	2.9	58.30	3 1/2 x 8 5/8
35 Vdc (40 Vdc Surge)				
6600	500C662U035AK2B	41.7	5.00	1 3/8 x 1 5/8
11000	500C113U035AA2B	26.7	6.90	1 3/8 x 2 1/8
16000	500C163U035AH2B	19.5	8.70	1 3/8 x 2 5/8
20000	500C203U035EA2B	22.3	8.80	1 3/4 x 2 1/8
21000	500C213U035AB2B	19.4	9.30	1 3/8 x 3 1/8
24000	500C243U035EH2B	19.2	10.20	1 3/4 x 2 5/8
26000	500C263U035AJ2B	19.7	9.80	1 3/8 x 3 5/8
26000	500C263U035BA2B	24.5	9.10	2 x 2 1/8
32000	500C323U035AC2B	18.7	10.50	1 3/8 x 4 1/8
33000	500C333U035BH2B	20.1	10.80	2 x 2 5/8
34000	500C343U035EB2B	15.5	12.10	1 3/4 x 3 1/8
37000	500C373U035AD2B	16.7	11.60	1 3/8 x 4 5/8
42000	500C423U035AE2B	14.8	12.90	1 3/8 x 5 1/8
43000	500C433U035EJ2B	13.2	13.80	1 3/4 x 3 5/8
43000	500C433U035BB2B	15.9	13.00	2 x 3 1/8
48000	500C483U035AF2B	13.5	14.00	1 3/8 x 5 5/8
51000	500C513U035CH2B	14.8	14.50	2 1/2 x 2 5/8
53000	500C533U035EC2B	11.8	15.30	1 3/4 x 4 1/8
55000	500C553U035BJ2B	13.2	15.00	2 x 3 5/8
62000	500C623U035ED2B	10.6	16.80	1 3/4 x 4 5/8
67000	500C673U035BC2B	11.6	16.70	2 x 4 1/8

Cap. (µF)	Catalog Part Number	ESR Max. @ 25 °C 120 Hz (mΩ)	Ripple Max. @ 85°C 120 Hz (A)	Nominal Size D x L (inches)
71000	500C713U035CB2B	11.5	17.50	2 1/2 x 3 1/8
72000	500C723U035EE2B	9.8	18.20	1 3/4 x 5 1/8
80000	500C803U035BD2B	10.5	18.20	2 x 4 5/8
82000	500C823U035EF2B	9.4	19.20	1 3/4 x 5 5/8
91000	500C913U035CJ2B	9.4	20.30	2 1/2 x 3 5/8
92000	500C923U035BE2B	9.8	19.50	2 x 5 1/8
100000	500C104U035BF2B	9.4	20.70	2 x 5 5/8
110000	500C114U035CC2B	8.2	22.60	2 1/2 x 4 1/8
110000	500C114U035DB2B	6.9	25.30	3 x 3 1/8
130000	500C134U035CD2B	7.4	24.80	2 1/2 x 4 5/8
140000	500C144U035DJ2B	5.7	29.10	3 x 3 5/8
150000	500C154U035CE2B	6.8	26.80	2 1/2 x 5 1/8
170000	500C174U035CF2B	6.1	29.20	2 1/2 x 5 5/8
170000	500C174U035DC2D	5.2	32.00	3 x 4 1/8
200000	500C204U035DD2D	4.7	34.80	3 x 4 5/8
230000	500C234U035DE2D	4.4	37.20	3 x 5 1/8
240000	500C244U035FC2D	4.9	36.00	3 1/2 x 4 1/8
260000	500C264U035DF2D	4.0	39.90	3 x 5 5/8
270000	500C274U035DP2D	3.9	41.30	3 x 5 7/8
280000	500C284U035FD2D	4.5	39.00	3 1/2 x 4 5/8
330000	500C334U035FE2D	4.0	42.60	3 1/2 x 5 1/8
370000	500C374U035FF2D	3.6	46.00	3 1/2 x 5 5/8
380000	500C384U035DN2D	3.8	45.30	3 x 7 5/8
390000	500C394U035FP2D	3.5	47.50	3 1/2 x 5 7/8
440000	500C444U035DG2D	3.6	48.10	3 x 8 5/8
540000	500C544U035FN2D	3.4	52.10	3 1/2 x 7 5/8
630000	500C634U035FG2D	3.3	55.20	3 1/2 x 8 5/8
50 Vdc (65 Vdc Surge)				
4500	500C452U050AK2B	47.9	4.70	1 3/8 x 1 5/8
7600	500C762U050AA2B	30.9	6.40	1 3/8 x 2 1/8
11000	500C113U050AH2B	21.8	8.30	1 3/8 x 2 5/8
14000	500C143U050AB2B	20.9	9.00	1 3/8 x 3 1/8
14000	500C143U050EA2B	22.8	8.70	1 3/4 x 2 1/8
16000	500C163U050EH2B	20.2	10.00	1 3/4 x 2 5/8
17000	500C173U050BA2B	25.3	9.00	2 x 2 1/8
18000	500C183U050AJ2B	17.8	10.30	1 3/8 x 3 5/8
21000	500C213U050AC2B	17.3	11.00	1 3/8 x 4 1/8
22000	500C223U050BH2B	20.8	10.70	2 x 2 5/8
23000	500C233U050EB2B	15.6	12.10	1 3/4 x 3 1/8
25000	500C253U050AD2B	16.8	11.60	1 3/8 x 4 5/8
29000	500C293U050AE2B	15.1	12.70	1 3/8 x 5 1/8
29000	500C293U050EJ2B	13.5	13.60	1 3/4 x 3 5/8
29000	500C293U050BB2B	16.3	12.80	2 x 3 1/8
32000	500C323U050AF2B	13.8	13.80	1 3/8 x 5 5/8

Type 500C 95 °C Long Life, Screw Terminal, Aluminum

Long Life, High Capacitance Screw Terminal Type

Cap. (µF)	Catalog Part Number	ESR Max. @ 25 °C 120 Hz (mΩ)	Ripple Max. @ 85°C 120 Hz (A)	Nominal Size D x L (inches)
34000	500C343U050CH2B	15.1	14.40	2 1/2 x 2 5/8
36000	500C363U050EC2B	12.0	15.20	1 3/4 x 4 1/8
37000	500C373U050BJ2B	13.6	14.80	2 x 3 5/8
42000	500C423U050ED2B	10.8	16.60	1 3/4 x 4 5/8
46000	500C463U050BC2B	11.9	16.50	2 x 4 1/8
48000	500C483U050CB2B	12.0	17.10	2 1/2 x 3 1/8
49000	500C493U050EE2B	9.8	18.10	1 3/4 x 5 1/8
54000	500C543U050BD2B	10.8	18.00	2 x 4 5/8
55000	500C553U050EF2B	9.5	19.10	1 3/4 x 5 5/8
62000	500C623U050BE2B	10.0	19.40	2 x 5 1/8
62000	500C623U050CJ2B	10.3	19.40	2 1/2 x 3 5/8
70000	500C703U050BF2B	9.5	20.50	2 x 5 5/8
72000	500C723U050DB2B	9.1	22.00	3 x 3 1/8
75000	500C753U050CC2B	8.9	21.80	2 1/2 x 4 1/8
89000	500C893U050CD2B	7.9	24.00	2 1/2 x 4 5/8
92000	500C923U050DJ2B	7.7	25.10	3 x 3 5/8
100000	500C104U050CE2B	7.2	26.00	2 1/2 x 5 1/8
110000	500C114U050DC2B	6.9	27.60	3 x 4 1/8
120000	500C124U050CF2B	6.7	27.90	2 1/2 x 5 5/8
130000	500C134U050DD2D	6.1	30.40	3 x 4 5/8
150000	500C154U050DE2D	5.9	32.00	3 x 5 1/8
150000	500C154U050FC2D	6.4	31.70	3 1/2 x 4 1/8
170000	500C174U050DF2D	5.6	33.80	3 x 5 5/8
180000	500C184U050DP2D	5.4	35.00	3 x 5 7/8
180000	500C184U050FD2D	5.7	34.70	3 1/2 x 4 5/8
200000	500C204U050FE2D	5.4	36.80	3 1/2 x 5 1/8
230000	500C234U050FF2D	5.0	39.00	3 1/2 x 5 5/8
250000	500C254U050FP2D	5.0	40.00	3 1/2 x 5 7/8
260000	500C264U050DN2D	5.0	42.00	3 x 7 5/8
300000	500C304U050DG2D	4.0	45.00	3 x 8 5/8
340000	500C344U050FN2D	4.0	47.00	3 1/2 x 7 5/8
400000	500C404U050FG2D	4.0	51.00	3 1/2 x 8 5/8
63 Vdc (75 Vdc Surge)				
3400	500C342U063AK2B	60.6	4.10	1 3/8 x 1 5/8
5800	500C582U063AA2B	39.0	5.70	1 3/8 x 2 1/8
8200	500C822U063AH2B	27.4	7.40	1 3/8 x 2 5/8
11000	500C113U063AB2B	25.2	8.20	1 3/8 x 3 1/8
11000	500C113U063EA2B	27.9	7.90	1 3/4 x 2 1/8
12000	500C123U063EH2B	25.6	8.80	1 3/4 x 2 5/8
13000	500C133U063BA2B	28.0	8.50	2 x 2 1/8
14000	500C143U063AJ2B	23.7	8.90	1 3/8 x 3 5/8
15000	500C153U063BH2B	22.6	10.20	2 x 2 5/8

Cap. (µF)	Catalog Part Number	ESR Max. @ 25 °C 120 Hz (mΩ)	Ripple Max. @ 85°C 120 Hz (A)	Nominal Size D x L (inches)
63 Vdc (75 Vdc Surge)				
16000	500C163U063AC2B	20.4	10.10	1 3/8 x 4 1/8
17000	500C173U063EB2B	19.5	10.80	1 3/4 x 3 1/8
19000	500C193U063AD2B	18.1	11.20	1 3/8 x 4 5/8
20000	500C203U063BB2B	18.1	12.10	2 x 3 1/8
22000	500C223U063AE2B	16.4	12.20	1 3/8 x 5 1/8
22000	500C223U063EJ2B	16.2	12.50	1 3/4 x 3 5/8
24000	500C243U063CH2B	26.8	10.80	2 1/2 x 2 5/8
25000	500C253U063AF2B	15.1	13.20	1 3/8 x 5 5/8
26000	500C263U063BJ2B	15.1	14.00	2 x 3 5/8
27000	500C273U063EC2B	14.2	14.00	1 3/4 x 4 1/8
32000	500C323U063ED2B	12.8	15.30	1 3/4 x 4 5/8
32000	500C323U063BC2B	13.3	15.60	2 x 4 1/8
34000	500C343U063CB2B	19.3	13.50	2 1/2 x 3 1/8
37000	500C373U063EE2B	11.8	16.50	1 3/4 x 5 1/8
38000	500C383U063BD2B	12.1	17.00	2 x 4 5/8
42000	500C423U063EF2B	11.2	17.60	1 3/4 x 5 5/8
43000	500C433U063CJ2B	17.1	15.10	2 1/2 x 3 5/8
44000	500C443U063BE2B	11.3	18.30	2 x 5 1/8
49000	500C493U063BF2B	10.7	19.40	2 x 5 5/8
50000	500C503U063DB2B	14.9	17.20	3 x 3 1/8
53000	500C533U063CC2B	13.7	17.50	2 1/2 x 4 1/8
62000	500C623U063CD2B	11.8	19.60	2 1/2 x 4 5/8
65000	500C653U063DJ2B	12.1	20.00	3 x 3 5/8
72000	500C723U063CE2B	11.0	21.10	2 1/2 x 5 1/8
79000	500C793U063DC2B	10.8	22.10	3 x 4 1/8
82000	500C823U063CF2B	10.5	22.30	2 1/2 x 5 5/8
93000	500C933U063DD2B	9.9	23.90	3 x 4 5/8
110000	500C114U063DE2B	8.8	26.30	3 x 5 1/8
110000	500C114U063FC2D	9.9	25.40	3 1/2 x 4 1/8
120000	500C124U063DF2B	7.9	28.50	3 x 5 5/8
130000	500C134U063DP2B	7.5	29.60	3 x 5 7/8
130000	500C134U063FD2D	9.0	27.60	3 1/2 x 4 5/8
150000	500C154U063FE2D	7.9	30.30	3 1/2 x 5 1/8
170000	500C174U063FF2D	7.2	32.80	3 1/2 x 5 5/8
180000	500C184U063DN2D	6.5	35.00	3 x 7 5/8
180000	500C184U063FP2D	6.8	34.00	3 1/2 x 5 7/8
210000	500C214U063DG2D	5.7	38.30	3 x 8 5/8
250000	500C254U063FN2D	5.8	40.20	3 1/2 x 7 5/8
290000	500C294U063FG2D	5.2	43.90	3 1/2 x 8 5/8
75 Vdc (95 Vdc Surge)				
2700	500C272U075AK2B	76.2	3.70	1 3/8 x 1 5/8

Type 500C 95 °C Long Life, Screw Terminal, Aluminum

Long Life, High Capacitance Screw Terminal Type

Cap. (µF)	Catalog Part Number	ESR Max. @ 25 °C 120 Hz (mΩ)	Ripple Max. @ 85°C 120 Hz (A)	Nominal Size D x L (inches)
75 Vdc (95 Vdc Surge)				
4300	500C432U075AA2B	50.7	5.00	1 3/8 x 2 1/8
6400	500C642U075AH2B	35.0	6.50	1 3/8 x 2 5/8
8300	500C832U075EA2B	55.6	5.60	1 3/4 x 2 1/8
8600	500C862U075AB2B	34.0	7.10	1 3/8 x 3 1/8
9800	500C982U075EH2B	47.3	6.50	1 3/4 x 2 5/8
10000	500C103U075BA2B	34.8	7.70	2 x 2 1/8
11000	500C113U075AJ2B	31.1	7.80	1 3/8 x 3 5/8
11000	500C113U075BH2B	27.5	9.30	2 x 2 5/8
13000	500C133U075AC2B	28.2	8.60	1 3/8 x 4 1/8
14000	500C143U075EB2B	34.1	8.20	1 3/4 x 3 1/8
15000	500C153U075AD2B	24.5	9.60	1 3/8 x 4 5/8
16000	500C163U075BB2B	21.4	11.20	2 x 3 1/8
17000	500C173U075AE2B	22.5	10.40	1 3/8 x 5 1/8
18000	500C183U075EJ2B	26.9	9.70	1 3/4 x 3 5/8
19000	500C193U075AF2B	20.4	11.30	1 3/8 x 5 5/8
19000	500C193U075CH2B	30.0	10.20	2 1/2 x 2 5/8
21000	500C213U075EC2B	22.3	11.10	1 3/4 x 4 1/8
21000	500C213U075BJ2B	18.0	12.80	2 x 3 5/8
25000	500C253U075ED2B	19.2	12.50	1 3/4 x 4 5/8
25000	500C253U075BC2B	15.6	14.40	2 x 4 1/8
26000	500C263U075CB2B	21.6	12.70	2 1/2 x 3 1/8
29000	500C293U075EE2B	16.9	13.80	1 3/4 x 5 1/8
30000	500C303U075BD2B	13.9	15.80	2 x 4 5/8
33000	500C333U075EF2B	15.2	15.10	1 3/4 x 5 5/8
34000	500C343U075BE2B	12.8	17.10	2 x 5 1/8
34000	500C343U075CJ2B	17.8	14.80	2 1/2 x 3 5/8
39000	500C393U075BF2B	12.0	18.30	2 x 5 5/8
40000	500C403U075DB2B	18.0	15.60	3 x 3 1/8
42000	500C423U075CC2B	15.1	16.70	2 1/2 x 4 1/8
49000	500C493U075CD2B	13.5	18.40	2 1/2 x 4 5/8
51000	500C513U075DJ2B	14.4	18.30	3 x 3 5/8
57000	500C573U075CE2B	12.0	20.20	2 1/2 x 5 1/8
62000	500C623U075DC2B	12.9	20.20	3 x 4 1/8
64000	500C643U075CF2B	11.2	21.50	2 1/2 x 5 5/8
74000	500C743U075DD2B	11.8	21.90	3 x 4 5/8
85000	500C853U075DE2B	10.4	24.10	3 x 5 1/8
85000	500C853U075FC2D	11.8	23.20	3 1/2 x 4 1/8
96000	500C963U075DF2B	9.4	26.20	3 x 5 5/8
100000	500C104U075DP2B	8.9	27.20	3 x 5 7/8
100000	500C104U075FD2D	10.7	25.30	3 1/2 x 4 5/8
120000	500C124U075FE2D	9.4	27.80	3 1/2 x 5 1/8
130000	500C134U075FF2D	8.4	30.20	3 1/2 x 5 5/8
140000	500C144U075DN2D	7.7	32.10	3 x 7 5/8
140000	500C144U075FP2D	8.1	31.30	3 1/2 x 5 7/8
160000	500C164U075DG2D	6.8	35.10	3 x 8 5/8
190000	500C194U075FN2D	6.9	36.80	3 1/2 x 7 5/8
220000	500C224U075FG2D	6.2	40.20	3 1/2 x 8 5/8
100 Vdc (125 Vdc Surge)				
1600	500C162U100AK2B	98.4	3.30	1 3/8 x 1 5/8
2500	500C252U100AA2B	60.2	4.60	1 3/8 x 2 1/8
3800	500C382U100AH2B	42.7	5.90	1 3/8 x 2 5/8
4900	500C492U100EA2B	62.0	5.30	1 3/4 x 2 1/8
5100	500C512U100AB2B	38.2	6.70	1 3/8 x 3 1/8
5100	500C512U100BA2B	51.8	6.30	2 x 2 1/8
5800	500C582U100EH2B	52.8	6.20	1 3/4 x 2 5/8
6300	500C632U100AJ2B	33.0	7.60	1 3/8 x 3 5/8
7300	500C732U100BH2B	37.8	7.90	2 x 2 5/8
7600	500C762U100AC2B	30.7	8.20	1 3/8 x 4 1/8
8100	500C812U100EB2B	38.0	7.70	1 3/4 x 3 1/8
8900	500C892U100AD2B	29.0	8.80	1 3/8 x 4 5/8
10000	500C103U100AE2B	28.3	9.30	1 3/8 x 5 1/8
10000	500C103U100EJ2B	29.9	9.20	1 3/4 x 3 5/8
10000	500C103U100BB2B	30.6	9.30	2 x 3 1/8
11000	500C113U100AF2B	27.6	9.70	1 3/8 x 5 5/8
12000	500C123U100CH2B	33.7	9.60	2 1/2 x 2 5/8
13000	500C133U100EC2B	24.8	10.60	1 3/4 x 4 1/8
13000	500C133U100BJ2B	22.3	11.50	2 x 3 5/8
15000	500C153U100ED2B	21.2	11.90	1 3/4 x 4 5/8
16000	500C163U100BC2B	19.9	12.80	2 x 4 1/8
17000	500C173U100EE2B	18.7	13.10	1 3/4 x 5 1/8
17000	500C173U100CB2B	23.4	12.30	2 1/2 x 3 1/8
19000	500C193U100BD2B	17.7	14.10	2 x 4 5/8
20000	500C203U100EF2B	16.8	14.30	1 3/4 x 5 5/8
22000	500C223U100BE2B	15.6	15.50	2 x 5 1/8
22000	500C223U100CJ2B	19.1	14.30	2 1/2 x 3 5/8
25000	500C253U100BF2B	14.9	16.40	2 x 5 5/8
25000	500C253U100DB2B	19.9	14.90	3 x 3 1/8
27000	500C273U100CC2B	16.5	16.00	2 1/2 x 4 1/8
32000	500C323U100CD2B	14.7	17.60	2 1/2 x 4 5/8
33000	500C333U100DJ2B	16.4	17.20	3 x 3 5/8
36000	500C363U100CE2B	13.4	19.10	2 1/2 x 5 1/8
40000	500C403U100DC2B	14.4	19.10	3 x 4 1/8
41000	500C413U100CF2B	12.5	20.40	2 1/2 x 5 5/8
47000	500C473U100DD2B	13.0	20.90	3 x 4 5/8
54000	500C543U100DE2B	12.0	22.50	3 x 5 1/8
55000	500C553U100FC2D	13.4	21.80	3 1/2 x 4 1/8
62000	500C623U100DF2B	11.2	23.90	3 x 5 5/8

Type 500C 95 °C Long Life, Screw Terminal, Aluminum

Long Life, High Capacitance Screw Terminal Type

Cap. (µF)	Catalog Part Number	ESR Max. @ 25 °C 120 Hz (mΩ)	Ripple Max. @ 85°C 120 Hz (A)	Nominal Size D x L (inches)
100 Vdc (125 Vdc Surge)				
65000	500C653U100DP2B	11.1	24.40	3 x 5 7/8
65000	500C653U100FD2D	12.1	23.80	3 1/2 x 4 5/8
74000	500C743U100FE2D	10.9	25.90	3 1/2 x 5 1/8
84000	500C843U100FF2D	10.2	27.50	3 1/2 x 5 5/8
89000	500C893U100FP2D	10.0	28.10	3 1/2 x 5 7/8
94000	500C943U100DN2D	9.2	29.40	3 x 7 5/8
110000	500C114U100DG2D	8.2	32.10	3 x 8 5/8
120000	500C124U100FN2D	8.3	33.70	3 1/2 x 7 5/8
140000	500C144U100FG2D	7.3	36.80	3 1/2 x 8 5/8
160 Vdc (200 Vdc)				
750	500C751T160AK2B	150.0	2.60	1 3/8 x 1 5/8
1200	500C122T160AA2B	93.0	3.70	1 3/8 x 2 1/8
1500	500C152T160AH2B	70.5	4.60	1 3/8 x 2 5/8
2100	500C212T160AB2B	58.5	5.40	1 3/8 x 3 1/8
2300	500C232T160EA2B	62.0	5.30	1 3/4 x 2 1/8
2400	500C242T160BA2B	70.5	5.40	2 x 2 1/8
2700	500C272T160AJ2B	50.2	6.10	1 3/8 x 3 5/8
2700	500C272T160EH2B	52.8	6.20	1 3/4 x 2 5/8
3300	500C332T160AC2B	42.9	7.00	1 3/8 x 4 1/8
3500	500C352T160BH2B	46.5	7.10	2 x 2 5/8
3800	500C382T160EB2B	38.0	7.70	1 3/4 x 3 1/8
3900	500C392T160AD2B	37.7	7.70	1 3/8 x 4 5/8
4500	500C452T160AE2B	34.7	8.40	1 3/8 x 5 1/8
4900	500C492T160EJ2B	29.9	9.20	1 3/4 x 3 5/8
4900	500C492T160BB2B	33.5	8.90	2 x 3 1/8
5100	500C512T160AF2B	32.2	9.00	1 3/8 x 5 5/8
5500	500C552T160CH2B	30.1	10.20	2 1/2 x 2 5/8
6000	500C602T160EC2B	24.8	10.60	1 3/4 x 4 1/8
6300	500C632T160BJ2B	26.4	10.60	2 x 3 5/8
7100	500C712T160ED2B	21.2	11.90	1 3/4 x 4 5/8
7700	500C772T160BC2B	21.9	12.20	2 x 4 1/8
7700	500C772T160CB2B	21.3	12.80	2 1/2 x 3 1/8
8200	500C822T160EE2B	18.7	13.10	1 3/4 x 5 1/8
9100	500C912T160BD2B	18.8	13.60	2 x 4 5/8
9300	500C932T160EF2B	16.8	14.30	1 3/4 x 5 5/8
9900	500C992T160CJ2B	17.0	15.10	2 1/2 x 3 5/8
10000	500C103T160BE2B	16.6	15.00	2 x 5 1/8
11000	500C113T160DB2B	14.7	17.30	3 x 3 1/8
12000	500C123T160BF2B	14.9	16.40	2 x 5 5/8
12000	500C123T160CC2B	14.1	17.30	2 1/2 x 4 1/8
14000	500C143T160CD2B	11.9	19.60	2 1/2 x 4 5/8

Cap. (µF)	Catalog Part Number	ESR Max. @ 25 °C 120 Hz (mΩ)	Ripple Max. @ 85°C 120 Hz (A)	Nominal Size D x L (inches)
160 Vdc (200 Vdc)				
15000	500C153T160DJ2B	11.5	20.50	3 x 3 5/8
16000	500C163T160CE2B	10.7	21.30	2 1/2 x 5 1/8
18000	500C183T160DC2B	9.6	23.40	3 x 4 1/8
19000	500C193T160CF2B	9.6	23.20	2 1/2 x 5 5/8
21000	500C213T160DD2B	8.2	26.20	3 x 4 5/8
25000	500C253T160DE2B	7.3	28.90	3 x 5 1/8
25000	500C253T160FC2D	9.2	26.40	3 1/2 x 4 1/8
28000	500C283T160DF2D	6.5	31.40	3 x 5 5/8
29000	500C293T160DP2D	6.2	32.60	3 x 5 7/8
29000	500C293T160FD2D	7.9	29.50	3 1/2 x 4 5/8
34000	500C343T160FE2D	6.9	32.40	3 1/2 x 5 1/8
38000	500C383T160FF2D	6.2	35.10	3 1/2 x 5 5/8
40000	500C403T160FP2D	5.9	36.50	3 1/2 x 5 7/8
41000	500C413T160DN2D	5.1	39.80	3 x 7 5/8
47000	500C473T160DG2D	4.3	44.00	3 x 8 5/8
56000	500C563T160FN2D	4.9	44.30	3 1/2 x 7 5/8
65000	500C653T160FG2D	4.2	48.80	3 1/2 x 8 5/8
200 Vdc (250 Vdc Surge)				
540	500C541T200AK2B	206.0	2.30	1 3/8 x 1 5/8
770	500C771T200AA2B	140.0	3.00	1 3/8 x 2 1/8
970	500C971T200AH2B	101.0	3.90	1 3/8 x 2 5/8
1400	500C142T200AB2B	78.5	4.60	1 3/8 x 3 1/8
1500	500C152T200EA2B	79.1	4.70	1 3/4 x 2 1/8
1600	500C162T200BA2B	82.0	5.00	2 x 2 1/8
1700	500C172T200AJ2B	63.9	5.40	1 3/8 x 3 5/8
1700	500C172T200EH2B	62.5	5.70	1 3/4 x 2 5/8
2100	500C212T200AC2B	51.7	6.30	1 3/8 x 4 1/8
2200	500C222T200BH2B	61.0	6.20	2 x 2 5/8
2400	500C242T200EB2B	48.4	6.90	1 3/4 x 3 1/8
2500	500C252T200AD2B	43.2	7.20	1 3/8 x 4 5/8
2900	500C292T200AE2B	37.8	8.00	1 3/8 x 5 1/8
3100	500C312T200EJ2B	37.9	8.20	1 3/4 x 3 5/8
3100	500C312T200BB2B	46.1	7.60	2 x 3 1/8
3300	500C332T200AF2B	33.4	8.90	1 3/8 x 5 5/8
3500	500C352T200CH2B	42.2	8.60	2 1/2 x 2 5/8
3800	500C382T200EC2B	31.3	9.40	1 3/4 x 4 1/8
4000	500C402T200BJ2B	36.2	9.00	2 x 3 5/8
4500	500C452T200ED2B	26.8	10.60	1 3/4 x 4 5/8
4900	500C492T200BC2B	28.5	10.60	2 x 4 1/8
4900	500C492T200CB2B	31.2	10.60	2 1/2 x 3 1/8
5200	500C522T200EE2B	23.5	11.70	1 3/4 x 5 1/8

Type 500C 95 °C Long Life, Screw Terminal, Aluminum

Long Life, High Capacitance Screw Terminal Type

Cap. (µF)	Catalog Part Number	ESR Max. @ 25 °C 120 Hz (mΩ)	Ripple Max. @ 85°C 120 Hz (A)	Nominal Size D x L (inches)
200 Vdc (250 Vdc Surge)				
5800	500C582T200BD2B	24.4	12.00	2 x 4 5/8
5900	500C592T200EF2B	21.0	12.80	1 3/4 x 5 5/8
6200	500C622T200CJ2B	22.3	13.20	2 1/2 x 3 5/8
6700	500C672T200BE2B	21.7	13.20	2 x 5 1/8
7600	500C762T200BF2B	19.6	14.30	2 x 5 5/8
7600	500C762T200CC2B	20.3	14.40	2 1/2 x 4 1/8
7600	500C762T200DB2B	30.3	12.10	3 x 3 1/8
9000	500C902T200CD2B	17.3	16.20	2 1/2 x 4 5/8
9800	500C982T200DJ2B	23.7	14.30	3 x 3 5/8
10000	500C103T200CE2B	15.8	17.60	2 1/2 x 5 1/8
12000	500C123T200CF2B	13.7	19.40	2 1/2 x 5 5/8
12000	500C123T200DC2B	19.7	16.30	3 x 4 1/8
14000	500C143T200DD2B	16.9	18.30	3 x 4 5/8
15000	500C153T200FC2B	17.1	19.30	3 1/2 x 4 1/8
16000	500C163T200FG2B	14.8	20.20	3 x 5 1/8
18000	500C183T200DF2B	13.3	22.00	3 x 5 5/8
19000	500C193T200DP2B	15.3	20.70	3 x 5 7/8
20000	500C203T200FD2B	12.7	23.30	3 1/2 x 4 5/8
21000	500C213T200FE2D	13.4	23.30	3 1/2 x 5 1/8
24000	500C243T200FF2D	12.0	25.30	3 1/2 x 5 5/8
25000	500C253T200FP2D	11.5	26.30	3 1/2 x 5 7/8
26000	500C263T200DN2B	11.7	26.40	3 x 7 5/8
31000	500C313T200DG2B	9.6	29.60	3 x 8 5/8
35000	500C353T200FN2D	9.3	32.10	3 1/2 x 7 5/8
40000	500C403T200FG2D	7.9	35.50	3 1/2 x 8 5/8
250 Vdc (300 Vdc Surge)				
380	500C381T250AK2B	260.0	2.00	1 3/8 x 1 5/8
680	500C681T250AA2B	156.0	2.90	1 3/8 x 2 1/8
830	500C831T250AH2B	119.0	3.50	1 3/8 x 2 5/8
1100	500C112T250AB2B	87.5	4.40	1 3/8 x 3 1/8
1100	500C112T250EA2B	99.1	4.20	1 3/4 x 2 1/8
1200	500C122T250BA2B	94.6	4.60	2 x 2 1/8
1300	500C132T250EH2B	82.8	4.90	1 3/4 x 2 5/8
1400	500C142T250AJ2B	69.5	5.20	1 3/8 x 3 5/8
1700	500C172T250AC2B	57.8	6.00	1 3/8 x 4 1/8
1700	500C172T250BH2B	65.7	6.00	2 x 2 5/8
1800	500C182T250EB2B	61.1	6.10	1 3/4 x 3 1/8
2000	500C202T250AD2B	51.5	6.60	1 3/8 x 4 5/8
2300	500C232T250AE2B	44.1	7.40	1 3/8 x 5 1/8
2300	500C232T250EJ2B	48.5	7.20	1 3/4 x 3 5/8
2400	500C242T250BB2B	46.2	7.60	2 x 3 1/8
2600	500C262T250AF2B	38.4	8.30	1 3/8 x 5 5/8
2600	500C262T250CH2B	51.6	7.80	2 1/2 x 2 5/8

Cap. (µF)	Catalog Part Number	ESR Max. @ 25 °C 120 Hz (mΩ)	Ripple Max. @ 85°C 120 Hz (A)	Nominal Size D x L (inches)
250 Vdc (300 Vdc Surge)				
2800	500C282T250EC2B	40.4	8.30	1 3/4 x 4 1/8
3100	500C312T250BJ2B	38.1	8.80	2 x 3 5/8
3300	500C332T250ED2B	34.7	9.30	1 3/4 x 4 5/8
3700	500C372T250CB2B	32.0	10.50	2 1/2 x 3 1/8
3800	500C382T250EE2B	30.5	10.30	1 3/4 x 5 1/8
3800	500C382T250BC2B	31.4	10.10	2 x 4 1/8
4300	500C432T250EF2B	27.3	11.20	1 3/4 x 5 5/8
4500	500C452T250BD2B	26.9	11.40	2 x 4 5/8
4700	500C472T250CJ2B	25.0	12.40	2 1/2 x 3 5/8
5200	500C522T250BE2B	23.6	12.60	2 x 5 1/8
5600	500C562T250DB2B	27.6	12.60	3 x 3 1/8
5800	500C582T250CC2B	20.7	14.30	2 1/2 x 4 1/8
5900	500C592T250BF2B	21.0	13.80	2 x 5 5/8
6900	500C692T250CD2B	17.7	16.10	2 1/2 x 4 5/8
7200	500C722T250DJ2B	21.6	15.00	3 x 3 5/8
7900	500C792T250CE2B	15.5	17.70	2 1/2 x 5 1/8
8800	500C882T250DC2B	17.6	17.30	3 x 4 1/8
9000	500C902T250CF2B	13.8	19.40	2 1/2 x 5 5/8
10000	500C103T250DD2B	16.3	18.60	3 x 4 5/8
11000	500C113T250FC2D	19.5	18.10	3 1/2 x 4 1/8
12000	500C123T250DE2B	14.3	20.60	3 x 5 1/8
13000	500C133T250FD2D	17.2	19.90	3 1/2 x 4 5/8
14000	500C143T250DF2B	12.0	23.20	3 x 5 5/8
15000	500C153T250DP2B	11.5	23.90	3 x 5 7/8
15000	500C153T250FE2D	15.1	22.00	3 1/2 x 5 1/8
17000	500C173T250FF2D	13.2	24.20	3 1/2 x 5 5/8
18000	500C183T250FP2D	12.8	24.80	3 1/2 x 5 7/8
21000	500C213T250DN2D	9.6	30.90	3 x 7 5/8
24000	500C243T250DG2D	7.0	34.60	3 x 8 5/8
25000	500C253T250FN2D	10.5	30.00	3 1/2 x 7 5/8
29000	500C293T250FG2D	9.2	33.00	3 1/2 x 8 5/8
300 Vdc (350 Vdc Surge)				
290	500C291T300AK2B	418.0	1.60	1 3/8 x 1 5/8
520	500C521T300AA2B	231.0	2.30	1 3/8 x 2 1/8
630	500C631T300AH2B	189.0	2.80	1 3/8 x 2 5/8
870	500C871T300AB2B	138.0	3.50	1 3/8 x 3 1/8
870	500C871T300EA2B	139.0	3.50	1 3/4 x 2 1/8
1000	500C102T300BA2B	131.0	3.90	2 x 2 1/8
1100	500C112T300AJ2B	107.0	4.20	1 3/8 x 3 5/8
1100	500C112T300EH2B	117.0	4.10	1 3/4 x 2 5/8
1300	500C132T300AC2B	90.4	4.80	1 3/8 x 4 1/8
1300	500C132T300BH2B	103.0	4.80	2 x 2 5/8
1400	500C142T300EB2B	84.5	5.20	1 3/4 x 3 1/8

Type 500C 95 °C Long Life, Screw Terminal, Aluminum

Long Life, High Capacitance Screw Terminal Type

Cap. (µF)	Catalog Part Number	ESR Max. @ 25 °C 120 Hz (mΩ)	Ripple Max. @ 85°C 120 Hz (A)	Nominal Size D x L (inches)
300 Vdc (350 Vdc Surge)				
1600	500C162T300AD2B	77.4	5.40	1 3/8 x 4 5/8
1800	500C182T300AE2B	65.7	6.10	1 3/8 x 5 1/8
1800	500C182T300EJ2B	68.3	6.10	1 3/4 x 3 5/8
1900	500C192T300BB2B	71.1	6.10	2 x 3 1/8
2000	500C202T300AF2B	60.3	6.60	1 3/8 x 5 5/8
2200	500C222T300EC2B	56.7	7.00	1 3/4 x 4 1/8
2200	500C222T300CH2B	60.5	7.20	2 1/2 x 2 5/8
2400	500C242T300BJ2B	55.5	7.30	2 x 3 5/8
2600	500C262T300ED2B	48.5	7.90	1 3/4 x 4 5/8
2900	500C292T300BC2B	45.7	8.40	2 x 4 1/8
2900	500C292T300CB2B	46.5	8.70	2 1/2 x 3 1/8
3000	500C302T300EE2B	42.5	8.70	1 3/4 x 5 1/8
3400	500C342T300EF2B	37.9	9.50	1 3/4 x 5 5/8
3500	500C352T300BD2B	38.9	9.50	2 x 4 5/8
3700	500C372T300CJ2B	38.1	10.10	2 1/2 x 3 5/8
4000	500C402T300BE2B	34.0	10.50	2 x 5 1/8
4100	500C412T300DB2B	42.8	10.10	3 x 3 1/8
4500	500C452T300BF2B	30.2	11.50	2 x 5 5/8
4500	500C452T300CC2B	29.9	11.90	2 1/2 x 4 1/8
5200	500C522T300DJ2B	34.0	11.90	3 x 3 5/8
5300	500C532T300CD2B	25.5	13.40	2 1/2 x 4 5/8
6100	500C612T300CE2B	22.2	14.80	2 1/2 x 5 1/8
6400	500C642T300DC2B	26.2	14.20	3 x 4 1/8
6900	500C692T300CF2B	19.8	16.20	2 1/2 x 5 5/8
7500	500C752T300DD2B	23.6	15.50	3 x 4 5/8
8700	500C872T300DE2B	20.5	17.20	3 x 5 1/8
8900	500C892T300FC2D	21.0	17.40	3 1/2 x 4 1/8
9800	500C982T300DF2B	18.0	18.90	3 x 5 5/8
10000	500C103T300DP2B	17.0	19.70	3 x 5 7/8
10000	500C103T300FD2D	18.2	19.40	3 1/2 x 4 5/8
12000	500C123T300FE2D	16.0	21.30	3 1/2 x 5 1/8
13000	500C133T300FF2D	14.3	23.20	3 1/2 x 5 5/8
14000	500C143T300FP2D	13.5	24.20	3 1/2 x 5 7/8
15000	500C153T300DN2B	13.2	24.90	3 x 7 5/8
17000	500C173T300DG2B	10.8	27.90	3 x 8 5/8
19000	500C193T300FN2D	11.0	29.50	3 1/2 x 7 5/8
22000	500C223T300FG2D	9.3	32.60	3 1/2 x 8 5/8
350 Vdc (400 Vdc Surge)				
200	500C201T350AK2B	605.0	1.30	1 3/8 x 1 5/8
320	500C321T350AA2B	379.0	1.80	1 3/8 x 2 1/8
470	500C471T350AH2B	253.0	2.40	1 3/8 x 2 5/8
630	500C631T350AB2B	190.0	3.00	1 3/8 x 3 1/8
720	500C721T350EA2B	177.0	3.10	1 3/4 x 2 1/8

Cap. (µF)	Catalog Part Number	ESR Max. @ 25 °C 120 Hz (mΩ)	Ripple Max. @ 85°C 120 Hz (A)	Nominal Size D x L (inches)
350 Vdc (400 Vdc Surge)				
770	500C771T350EH2B	162.0	3.50	1 3/4 x 2 5/8
790	500C791T350AJ2B	153.0	3.50	1 3/8 x 3 5/8
790	500C791T350BA2B	168.0	3.50	2 x 2 1/8
950	500C951T350AC2B	127.0	4.00	1 3/8 x 4 1/8
970	500C971T350BH2B	132.0	4.20	2 x 2 5/8
990	500C991T350EB2B	125.0	4.30	1 3/4 x 3 1/8
1100	500C112T350AD2B	110.0	4.50	1 3/8 x 4 5/8
1300	500C132T350AE2B	96.3	5.00	1 3/8 x 5 1/8
1300	500C132T350EJ2B	97.3	5.10	1 3/4 x 3 5/8
1300	500C132T350BB2B	101.0	5.10	2 x 3 1/8
1400	500C142T350AF2B	85.9	5.50	1 3/8 x 5 5/8
1500	500C152T350CH2B	86.9	6.00	2 1/2 x 2 5/8
1600	500C162T350EC2B	79.9	5.90	1 3/4 x 4 1/8
1600	500C162T350BJ2B	79.2	6.10	2 x 3 5/8
1800	500C182T350ED2B	67.8	6.60	1 3/4 x 4 5/8
2000	500C202T350BC2B	65.1	7.00	2 x 4 1/8
2100	500C212T350EE2B	59.1	7.40	1 3/4 x 5 1/8
2100	500C212T350CB2B	61.0	7.60	2 1/2 x 3 1/8
2300	500C232T350BD2B	55.4	8.00	2 x 4 5/8
2400	500C242T350EF2B	52.4	8.10	1 3/4 x 5 5/8
2700	500C272T350BE2B	48.3	8.80	2 x 5 1/8
2700	500C272T350CJ2B	48.5	8.90	2 1/2 x 3 5/8
2900	500C292T350DB2B	54.0	9.00	3 x 3 1/8
3100	500C312T350BF2B	42.8	9.70	2 x 5 5/8
3300	500C332T350CC2B	39.9	10.30	2 1/2 x 4 1/8
3700	500C372T350DJ2B	41.7	10.80	3 x 3 5/8
3900	500C392T350CD2B	34.0	11.60	2 1/2 x 4 5/8
4500	500C452T350CE2B	29.6	12.80	2 1/2 x 5 1/8
4600	500C462T350DC2B	34.7	12.30	3 x 4 1/8
5100	500C512T350CF2B	26.2	14.10	2 1/2 x 5 5/8
5400	500C542T350DD2B	29.6	13.90	3 x 4 5/8
6200	500C622T350DE2B	25.8	15.30	3 x 5 1/8
6400	500C642T350FC2D	29.9	14.60	3 1/2 x 4 1/8
7000	500C702T350DF2B	22.9	16.70	3 x 5 5/8
7500	500C752T350DP2B	21.7	17.40	3 x 5 7/8
7500	500C752T350FD2D	25.7	16.30	3 1/2 x 4 5/8
8700	500C872T350FE2D	22.5	18.00	3 1/2 x 5 1/8
9800	500C982T350FF2D	20.0	19.60	3 1/2 x 5 5/8
10000	500C103T350DN2B	17.1	21.80	3 x 7 5/8
10000	500C103T350FP2D	18.9	20.40	3 1/2 x 5 7/8
12000	500C123T350DG2B	14.2	24.30	3 x 8 5/8
15000	500C153T350FN2D	14.9	25.40	3 1/2 x 7 5/8
17000	500C173T350FG2D	12.4	28.30	3 1/2 x 8 5/8

Type 500C 95 °C Long Life, Screw Terminal, Aluminum

Long Life, High Capacitance Screw Terminal Type

Cap. (µF)	Catalog Part Number	ESR Max. @ 25 °C 120 Hz (mΩ)	Ripple Max. @ 85°C 120 Hz (A)	Nominal Size D x L (inches)
400 Vdc (450 Vdc Surge)				
160	500C161T400AK2B	652.0	1.30	1 3/8 x 1 5/8
250	500C251T400AA2B	408.0	1.80	1 3/8 x 2 1/8
380	500C381T400AH2B	273.0	2.30	1 3/8 x 2 5/8
500	500C501T400AB2B	205.0	2.90	1 3/8 x 3 1/8
570	500C571T400EA2B	189.0	3.00	1 3/4 x 2 1/8
610	500C611T400EH2B	174.0	3.40	1 3/4 x 2 5/8
630	500C631T400AJ2B	164.0	3.40	1 3/8 x 3 5/8
630	500C631T400BA2B	179.0	3.40	2 x 2 1/8
750	500C751T400AC2B	137.0	3.90	1 3/8 x 4 1/8
780	500C781T400BH2B	142.0	4.10	2 x 2 5/8
790	500C791T400EB2B	134.0	4.10	1 3/4 x 3 1/8
880	500C881T400AD2B	118.0	4.40	1 3/8 x 4 5/8
1000	500C102T400AE2B	104.0	4.90	1 3/8 x 5 1/8
1000	500C102T400EJ2B	105.0	4.90	1 3/4 x 3 5/8
1000	500C102T400BB2B	109.0	5.00	2 x 3 1/8
1100	500C112T400AF2B	92.4	5.30	1 3/8 x 5 5/8
1200	500C122T400EC2B	85.8	5.70	1 3/4 x 4 1/8
1200	500C122T400CH2B	93.1	5.80	2 1/2 x 2 5/8
1300	500C132T400BJ2B	85.0	5.90	2 x 3 5/8
1500	500C152T400ED2B	72.9	6.40	1 3/4 x 4 5/8
1600	500C162T400BC2B	69.8	6.80	2 x 4 1/8
1700	500C172T400EE2B	63.4	7.10	1 3/4 x 5 1/8
1700	500C172T400CB2B	65.3	7.30	2 1/2 x 3 1/8
1900	500C192T400EF2B	56.2	7.80	1 3/4 x 5 5/8
1900	500C192T400BD2B	59.3	7.70	2 x 4 5/8
2100	500C212T400BE2B	51.7	8.50	2 x 5 1/8
2100	500C212T400CJ2B	52.0	8.60	2 1/2 x 3 5/8
2300	500C232T400DB2B	57.5	8.80	3 x 3 1/8
2400	500C242T400BF2B	45.9	9.30	2 x 5 5/8
2600	500C262T400CC2B	42.8	9.90	2 1/2 x 4 1/8
3000	500C302T400DJ2B	44.9	10.40	3 x 3 5/8
3100	500C312T400CD2B	35.6	11.30	2 1/2 x 4 5/8
3500	500C352T400CE2B	31.7	12.40	2 1/2 x 5 1/8
3600	500C362T400DC2B	37.0	11.90	3 x 4 1/8
4000	500C402T400CF2B	31.5	12.80	2 1/2 x 5 5/8
4300	500C432T400DD2B	28.1	14.20	3 x 4 5/8
4900	500C492T400DE2B	27.4	14.80	3 x 5 1/8
5100	500C512T400FC2D	31.9	14.10	3 1/2 x 4 1/8
5600	500C562T400DF2B	24.4	16.20	3 x 5 5/8
5900	500C592T400DP2B	23.1	16.90	3 x 5 7/8
6000	500C602T400FD2D	27.4	15.80	3 1/2 x 4 5/8
6900	500C692T400FE2D	23.9	17.50	3 1/2 x 5 1/8
7800	500C782T400FF2D	21.2	19.00	3 1/2 x 5 5/8
8200	500C822T400DN2B	18.2	21.20	3 x 7 5/8
8300	500C832T400FP2D	20.1	19.80	3 1/2 x 5 7/8
9500	500C952T400DG2B	15.1	23.60	3 x 8 5/8
11000	500C113T400FN2D	15.8	24.70	3 1/2 x 7 5/8
13000	500C133T400FG2D	13.1	27.50	3 1/2 x 8 5/8
450 Vdc (500 Vdc Surge)				
140	500C141T450AK2B	797.0	1.10	1 3/8 x 1 5/8
220	500C221T450AA2B	438.0	1.70	1 3/8 x 2 1/8
330	500C331T450AH2B	337.0	2.10	1 3/8 x 2 5/8
420	500C421T450EA2B	264.0	2.60	1 3/4 x 2 1/8
440	500C441T450AB2B	253.0	2.60	1 3/8 x 3 1/8
520	500C521T450EH2B	213.0	3.10	1 3/4 x 2 5/8
550	500C551T450AJ2B	203.0	3.10	1 3/8 x 3 5/8
550	500C551T450BA2B	228.0	3.00	2 x 2 1/8
660	500C661T450AC2B	169.0	3.50	1 3/8 x 4 1/8
670	500C671T450EB2B	165.0	3.70	1 3/4 x 3 1/8
680	500C681T450BH2B	178.0	3.60	2 x 2 5/8
760	500C761T450AD2B	146.0	3.90	1 3/8 x 4 5/8
870	500C871T450AE2B	128.0	4.40	1 3/8 x 5 1/8
870	500C871T450EJ2B	131.0	4.40	1 3/4 x 3 5/8
870	500C871T450BB2B	137.0	4.40	2 x 3 1/8
980	500C981T450AF2B	114.0	4.80	1 3/8 x 5 5/8
1100	500C112T450EC2B	107.0	5.10	1 3/4 x 4 1/8
1100	500C112T450BJ2B	109.0	5.20	2 x 3 5/8
1100	500C112T450CH2B	116.0	5.20	2 1/2 x 2 5/8
1300	500C132T450ED2B	91.1	5.70	1 3/4 x 4 5/8
1400	500C142T450EE2B	79.2	6.40	1 3/4 x 5 1/8
1400	500C142T450BC2B	89.5	6.00	2 x 4 1/8
1500	500C152T450CB2B	81.1	6.60	2 1/2 x 3 1/8
1600	500C162T450EF2B	70.2	7.00	1 3/4 x 5 5/8
1600	500C162T450BD2B	76.0	6.80	2 x 4 5/8
1900	500C192T450BE2B	66.1	7.50	2 x 5 1/8
1900	500C192T450CJ2B	66.5	7.60	2 1/2 x 3 5/8
2100	500C212T450BF2B	58.6	8.30	2 x 5 5/8
2100	500C212T450DB2B	63.8	8.30	3 x 3 1/8
2400	500C242T450CC2B	54.7	8.80	2 1/2 x 4 1/8
2700	500C272T450DJ2B	49.8	9.90	3 x 3 5/8
2800	500C282T450CD2B	46.4	9.90	2 1/2 x 4 5/8
3200	500C322T450CE2B	40.4	11.00	2 1/2 x 5 1/8
3300	500C332T450DC2B	38.2	11.80	3 x 4 1/8
3600	500C362T450CF2B	35.4	12.10	2 1/2 x 5 5/8
3900	500C392T450DD2B	35.7	12.60	3 x 4 5/8
4500	500C452T450DE2B	30.9	14.00	3 x 5 1/8
4600	500C462T450FC2D	30.3	14.50	3 1/2 x 4 1/8

Type 500C 95 °C Long Life, Screw Terminal, Aluminum

Long Life, High Capacitance Screw Terminal Type

Cap. (µF)	Catalog Part Number	ESR Max. @ 25 °C 120 Hz (mΩ)	Ripple Max. @ 85°C 120 Hz (A)	Nominal Size D x L (inches)
450 Vdc (500 Vdc Surge)				
5100	500C512T450DF2B	27.4	15.30	3 x 5 5/8
5400	500C542T450DP2B	26.0	15.90	3 x 5 7/8
5400	500C542T450FD2D	25.7	16.30	3 1/2 x 4 5/8
6300	500C632T450FE2D	22.4	18.00	3 1/2 x 5 1/8
7100	500C712T450FF2D	19.9	19.70	3 1/2 x 5 5/8
7500	500C752T450FP2D	18.8	20.50	3 1/2 x 5 7/8
7500	500C752T450DN2B	20.3	20.00	3 x 7 5/8
8700	500C872T450DG2B	16.8	22.40	3 x 8 5/8
9700	500C972T450FN2D	15.1	25.20	3 1/2 x 7 5/8
11000	500C113T450FG2D	12.7	28.00	3 1/2 x 8 5/8
500 Vdc (550 Vdc Surge)				
100	500C101T500AK2B	1224.0	0.90	1 3/8 x 1 5/8
170	500C171T500AA2B	722.0	1.30	1 3/8 x 2 1/8
230	500C231T500AH2B	546.0	1.70	1 3/8 x 2 5/8
260	500C261T500EA2B	498.0	1.90	1 3/4 x 2 1/8
310	500C311T500AB2B	410.0	2.00	1 3/8 x 3 1/8
320	500C321T500BA2B	393.0	2.30	2 x 2 1/8
370	500C371T500EH2B	347.0	2.40	1 3/4 x 2 5/8
380	500C381T500AJ2B	328.0	2.40	1 3/8 x 3 5/8
460	500C461T500AC2B	293.0	2.70	1 3/8 x 4 1/8
470	500C471T500BH2B	274.0	2.90	2 x 2 5/8
480	500C481T500EB2B	265.0	2.90	1 3/4 x 3 1/8
530	500C531T500AD2B	261.0	2.90	1 3/8 x 4 5/8
610	500C611T500AE2B	231.0	3.30	1 3/8 x 5 1/8
620	500C621T500EJ2B	202.0	3.50	1 3/4 x 3 5/8
650	500C651T500BB2B	200.0	3.70	2 x 3 1/8
690	500C691T500AF2B	195.0	3.70	1 3/8 x 5 5/8
760	500C761T500EC2B	169.0	4.00	1 3/4 x 4 1/8
770	500C771T500CH2B	171.0	4.30	2 1/2 x 2 5/8
840	500C841T500BJ2B	156.0	4.40	2 x 3 5/8
890	500C891T500ED2B	143.0	4.60	1 3/4 x 4 5/8
960	500C961T500BC2B	136.0	4.90	2 x 4 1/8
1000	500C102T500EE2B	125.0	5.10	1 3/4 x 5 1/8
1100	500C112T500BD2B	115.0	5.50	2 x 4 5/8
1100	500C112T500CB2B	122.0	5.40	2 1/2 x 3 1/8

Cap. (µF)	Catalog Part Number	ESR Max. @ 25 °C 120 Hz (mΩ)	Ripple Max. @ 85°C 120 Hz (A)	Nominal Size D x L (inches)
500 Vdc (550 Vdc Surge)				
1200	500C122T500EF2B	110.0	5.60	1 3/4 x 5 5/8
1300	500C132T500BE2B	100.0	6.10	2 x 5 1/8
1400	500C142T500CJ2B	95.1	6.40	2 1/2 x 3 5/8
1500	500C152T500BF2B	88.9	6.70	2 x 5 5/8
1600	500C162T500DB2B	86.4	7.10	3 x 3 1/8
1700	500C172T500CC2B	78.1	7.40	2 1/2 x 4 1/8
2000	500C202T500CD2B	66.3	8.30	2 1/2 x 4 5/8
2100	500C212T500DJ2B	67.4	8.50	3 x 3 5/8
2200	500C222T500CE2B	61.1	8.90	2 1/2 x 5 1/8
2400	500C242T500CF2B	54.7	9.70	2 1/2 x 5 5/8
2400	500C242T500DC2B	55.4	9.80	3 x 4 1/8
2800	500C282T500DD2B	48.1	10.90	3 x 4 5/8
3300	500C332T500DE2B	43.1	11.80	3 x 5 1/8
3400	500C342T500FC2D	40.1	12.60	3 1/2 x 4 1/8
3700	500C372T500DF2B	37.5	13.10	3 x 5 5/8
3900	500C392T500DP2B	35.5	13.60	3 x 5 7/8
4000	500C402T500FD2D	34.1	14.20	3 1/2 x 4 5/8
4600	500C462T500FE2D	30.0	15.60	3 1/2 x 5 1/8
5200	500C522T500FF2D	28.0	16.60	3 1/2 x 5 5/8
5400	500C542T500DN2B	27.9	17.10	3 x 7 5/8
5500	500C552T500FP2D	26.0	17.40	3 1/2 x 5 7/8
6300	500C632T500DG2B	23.1	19.10	3 x 8 5/8
7600	500C762T500FN2D	20.5	21.80	3 1/2 x 7 5/8
8800	500C882T500FG2D	16.7	24.40	3 1/2 x 8 5/8
550 Vdc (600 Vdc Surge)				
1400	500C142T550CC2B	170.5	4.90	2 1/2 x 4 1/8
1700	500C172T550CD2B	132.6	5.90	2 1/2 x 4 5/8
1900	500C192T550CE2B	111.7	6.80	2 1/2 x 5.125
2200	500C222T550DC2B	90.4	7.80	3 x 4 1/8
2300	500C232T550CF2B	86.5	7.80	2 1/2 x 5 5/8
2500	500C252T550DD2B	79.6	8.40	3 x 4 5/8
2900	500C292T550DE2B	64.0	9.70	3 x 5 1/8
3400	500C342T550DF2F	54.6	10.90	3 x 5 5/8
3700	500C372T550DP2B	50.2	12.24	3 x 5 7/8
5100	500C512T550DN2B	36.4	16.22	3 x 7 5/8

Type 500C 95 °C Long Life, Screw Terminal, Aluminum

Long Life, High Capacitance Screw Terminal Type

Typical Performance Curves

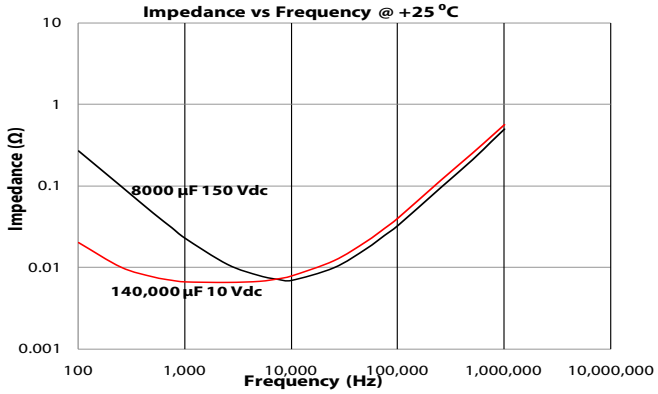

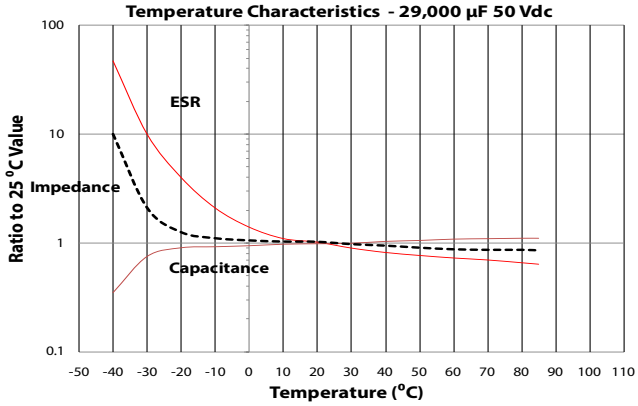

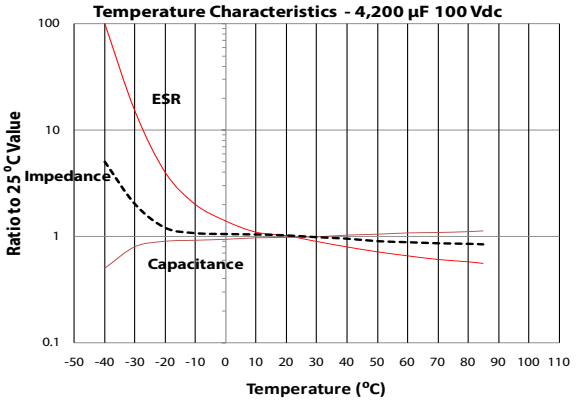

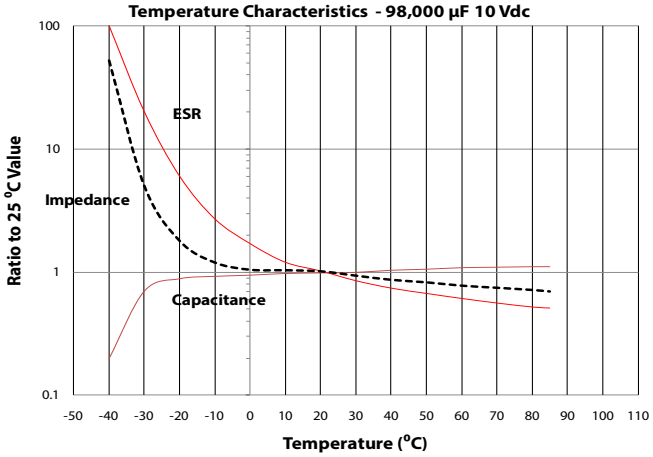

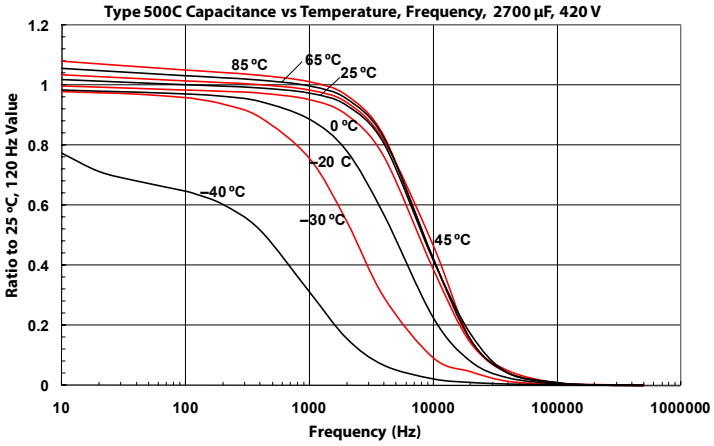

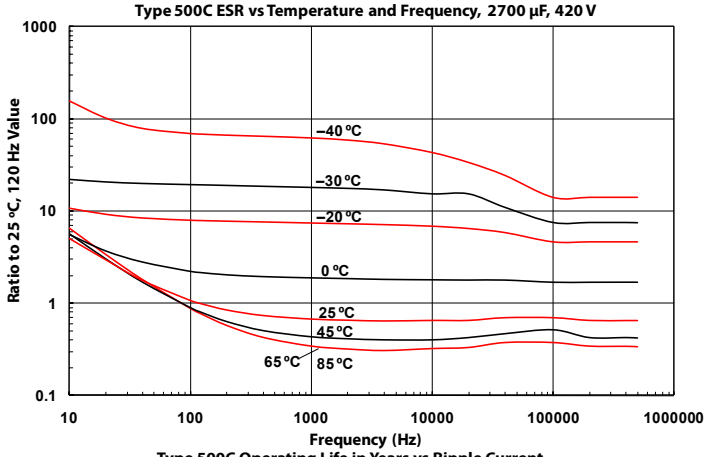

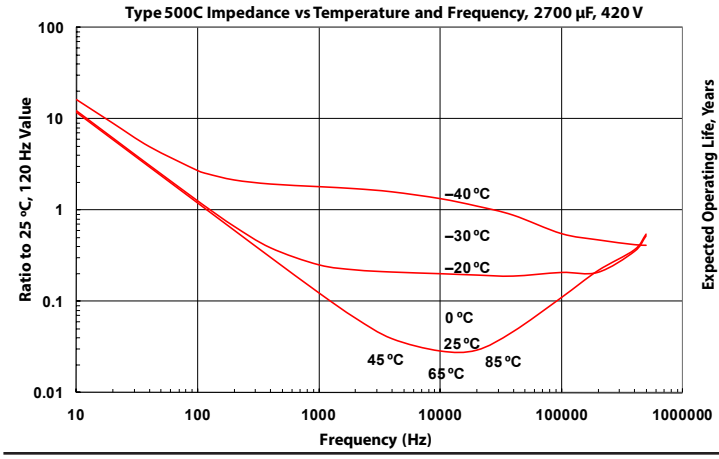

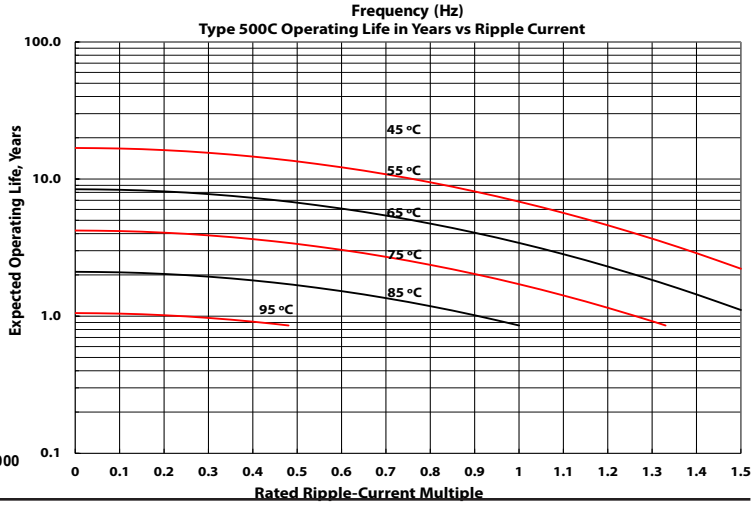

Notice and Disclaimer: All product drawings, descriptions, specifications, statements, information and data (collectively, the "Information") in this datasheet or other publication are subject to change. The customer is responsible for checking, confirming and verifying the extent to which the Information contained in this datasheet or other publication is applicable to an order at the time the order is placed. All Information given herein is believed to be accurate and reliable, but it is presented without any guarantee, warranty, representation or responsibility of any kind, expressed or implied. Statements of suitability for certain applications are based on the knowledge that the Cornell Dubilier company providing such statements ("Cornell Dubilier") has of operating conditions that such Cornell Dubilier company regards as typical for such applications, but are not intended to constitute any guarantee, warranty or representation regarding any such matter – and Cornell Dubilier specifically and expressly disclaims any guarantee, warranty or representation concerning the suitability for a specific customer application, use, storage, transportation, or operating environment. The Information is intended for use only by customers who have the requisite experience and capability to determine the correct products for their application. Any technical advice inferred from this Information or otherwise provided by Cornell Dubilier with reference to the use of any Cornell Dubilier products is given gratis (unless otherwise specified by Cornell Dubilier), and Cornell Dubilier assumes no obligation or liability for the advice given or results obtained. Although Cornell Dubilier strives to apply the most stringent quality and safety standards regarding the design and manufacturing of its products, in light of the current state of the art, isolated component failures may still occur. Accordingly, customer applications which require a high degree of reliability or safety should employ suitable designs or other safeguards (such as installation of protective circuitry or redundancies or other appropriate protective measures) in order to ensure that the failure of an electrical component does not result in a risk of personal injury or property damage. Although all product-related warnings, cautions and notes must be observed, the customer should not assume that all safety measures are indicated in such warnings, cautions and notes, or that other safety measures may not be required.

click here to see hardware and mounting options

Type 500R 85 °C High Ripple Current, Inverter Grade, Aluminum

New Higher Ripple Current than Type 500C Screw Terminal Type

The Type 500R is a higher ripple-current version of CDE's long-life Type 500C specifically designed to provide the ripple current capability and long life required for high reliability inverter applications. Like the 500C, the 500R has an endurance rating of 5,000 hours at +85 °C with the rated ripple current applied, and it is offered in the 350 V to 500 V ratings appropriate for use as dc-link bus capacitors in inverter applications.

Highlights

- Large can sizes
- Screw terminals, english and metric
- 5000 hour rated ripple current life
- Higher ripple current than 500C
- 350 to 500 Vdc ratings
- RoHS compliant

Specifications

Temperature Range	–40 °C to +85 °C
Rated Voltage Range	350 Vdc to 500 Vdc
Capacitance Range	1,100 uF to 18,000 µF
Capacitance Tolerance	±20%
Leakage Current	≤3 $\sqrt{CV}$ µA,5 mA max, 5 minutes
Ripple Current Multipliers	Ambient Temperature

45 °C	55 °C	65 °C	75 °C	85 °C
2.00	1.82	1.59	1.33	1.00

Frequency	50 Hz	60 Hz	120 Hz	360 Hz	1 kHz	5 kHz	10 kHz & up
2 & 2½" diameters							
350 V	0.78	0.83	1.00	1.20	1.29	1.34	1.35
400–500 V	0.77	0.82	1.00	1.22	1.33	1.39	1.40
3 & 3½" diameters							
350 V	0.84	0.88	1.00	1.12	1.17	1.20	1.20
400–500 V	0.79	0.84	1.00	1.18	1.26	1.31	1.32

Low Temperature Characteristics	Impedance ratio: $Z_{-20°C}/Z_{+25°C}$ ≤ 3 (350–500 Vdc)
Endurance Life Test	5000 h at full load at 85 °C Δ Capacitance ±20% ESR 200% of limit DCL 100% of limit
Shelf Life Test	500 h at 85 °C Capacitance 100% of limit ESR 100% of limit DCL 100% of limit
Vibration	10 to 55 Hz, 0.06" and 10 g max, 1.5 h each of 2 axes
RoHS Compliant	

Type 500R 85 °C High Ripple Current, Inverter Grade, Aluminum

New Higher Ripple Current than Type 500C Screw Terminal Type

Part Numbering System

500R	103	M	350	DN	2	E	S
Type	**Capacitance**	**Tolerance**	**Voltage**	**Case Code**	**Insulation**	**Terminal**	**Can Style**
	472 = 4700 µF **103**= 10,000 µF	**M** = ±20% **U** = –10%+75% **T** = –10%+50%	**350** = 350 Vdc **500** = 500 Vdc		**0**= None **1**= Polyester **2**= PVC	**A** = Low Post **B** = High Post **D** = High Current, Low Post **E** = High Current, High Post **F or M** = M5 Post **G** = M6 Low Post **H** = M6 High Post	**Blank**= Standard Can **S**= Stud Bottom **P**= Stud with Thermal Pad

Outline Drawing

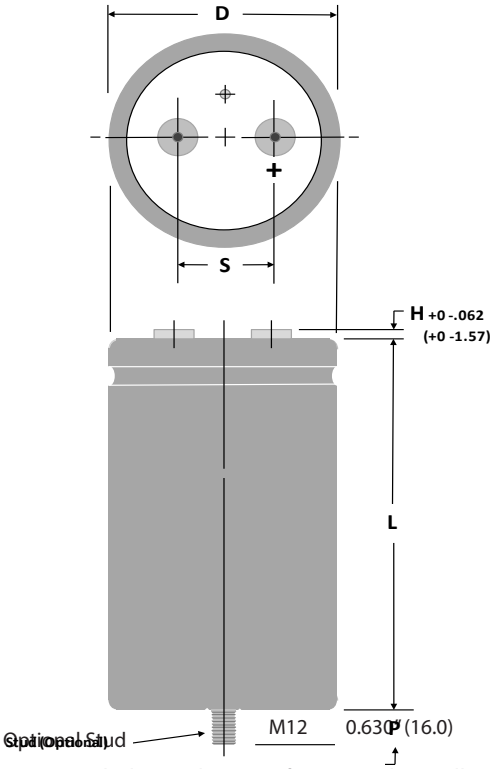

Standard insulation is 0.008-in PVC sleeve with 0.01-in polypropylene end disk. Polyester insulation is not available for 3.5 inch diameter units.

NOTE: With the stud-mount feature, a thermally-conductive disk can be inserted in the bottom flush with the outer insulating sleeve.This reduces the thermal resistance through the can bottom by 0.3 °C/W. Can Style P.

Terminal Dimensions

Terminal Style	For Case Diameters	Code	Post Diameter in	Post Diameter mm	H max in	H max mm	Thread	min Full Thread in	min Full Thread mm	Torque in·lb	Torque N·m
Low Post	2 to 3	A	0.314	8.0	0.094	2.4	10–32	0.218	5.5	25	2.82
High Post	2 to 3	B	0.314	8.0	0.281	7.1	10–32	0.375	9.5	25	2.82
High Current, Low	2½ to 3½	D	0.684	17.4	0.125	3.2	¼–28	0.344	8.7	50	5.65
High Current, High	2½ to 3½	E	0.684	17.4	0.281	7.1	¼–28	0.469	11.9	60	6.78
M5 Post, Small	1⅜ to 2	M	0.314	8.0	0.281	7.1	M5	0.375	9.5	25	2.82
M5 Post	2½ & 3	F	0.512	13.0	0.230	5.8	M5	0.344	8.7	25	2.82
M6 Low Post	2½ to 3½	G	0.684	17.4	0.125	3.2	M6	0.344	8.7	50	5.65
M6 High Post	2½ to 3½	H	0.684	17.4	0.281	7.1	M6	0.469	11.9	60	6.78

Type 500R 85 °C High Ripple Current, Inverter Grade, Aluminum

New Higher Ripple Current than Type 500C Screw Terminal Type

Uninsulated Case Dimensions

For insulated case, add 0.024"(0.610 mm) to "D"and 0.030"(0.762 mm) to length.

Case Code	Diameter (D)		Length (L)		Terminals (S)		Typical Weight	
	±0.031 in	±0.78 mm	±0.062 in	±1.57 mm	±0.015 in	±0.38 mm	oz	g
BC	2.000	50.80	4.125	104.78	0.88	22.23	9.5	269
BD	2.000	50.80	4.625	117.48	0.88	22.23	10.3	292
BE	2.000	50.80	5.125	130.18	0.88	22.23	10.7	303
BF	2.000	50.80	5.625	142.88	0.88	22.23	13.0	369
CH	2.500	63.50	2.625	66.68	1.13	28.58	9.2	261
CJ	2.500	63.50	3.625	92.08	1.13	28.58	12.7	361
CC	2.500	63.50	4.125	104.78	1.13	28.58	15.0	425
CD	2.500	63.50	4.625	117.48	1.13	28.58	17.2	488
CE	2.500	63.50	5.125	130.18	1.13	28.58	19.3	547
CF	2.500	63.50	5.625	142.88	1.13	28.58	21.4	607
DB	3.000	76.20	3.125	79.38	1.25	31.75	16.7	473
DJ	3.000	76.20	3.625	92.08	1.25	31.75	20.0	567
DC	3.000	76.20	4.125	104.78	1.25	31.75	22.2	629
DD	3.000	76.20	4.625	117.48	1.25	31.75	25.5	723
DE	3.000	76.20	5.125	130.18	1.25	31.75	30.0	850
DF	3.000	76.20	5.625	142.88	1.25	31.75	31.9	904
DM	3.000	76.20	6.625	168.28	1.25	31.75	34.4	933.5
DP	3.000	76.20	5.875	149.23	1.25	31.75	32.8	931
DN	3.000	76.20	7.625	193.68	1.25	31.75	39.5	1119
DG	3.000	76.20	8.625	219.08	1.25	31.75	43.3	1227
FC	3.500	88.90	4.125	104.78	1.25	31.75	30.0	850
FD	3.500	88.90	4.625	117.48	1.25	31.75	34.4	976
FE	3.500	88.90	5.125	130.18	1.25	31.75	40.5	1148
FF	3.500	88.90	5.625	142.88	1.25	31.75	43.1	1221
FP	3.500	88.90	5.875	149.23	1.25	31.75	44.3	1257
FN	3.500	88.90	7.625	193.68	1.25	31.75	53.3	1512
FG	3.500	88.90	8.625	219.08	1.25	31.75	58.5	1658
FM	3.500	88.90	6.625	168.28	1.25	31.75	46.4	1315.4

Type 500R 85 °C High Ripple Current, Inverter Grade, Aluminum

New Higher Ripple Current than Type 500C Screw Terminal Type

Ratings

Cap (µF)	Catalog Part Number	ESR Max. 25 °C 120 Hz (mΩ)	ESR Max. 25 °C 10kHz (mΩ)	Ripple Amps. 85 °C 120 Hz (A)	Ripple Amps. 85 °C >3 kHz (A)	Nominal Size D x L (in)
350 Vdc (400 Vdc Surge)						
2200	500R222M350BC2B	47	37.6	8.0	11.3	2 X 4 1/8
2200	500R222M350BD2B	43	34.4	9.0	12.6	2 X 4 5/8
2700	500R272M350BE2B	38	30.4	10.0	14.0	2 X 5 1/8
2800	500R282M350CJ2E	36	28.8	10.0	14.0	2 1/2 X 3 5/8
3100	500R312M350BF2B	33	26.4	11.0	15.4	2 X 5 5/8
3300	500R332M350CC2E	30	24.0	12.0	16.8	2 1/2 X 4 1/8
3600	500R362M350CD2E	24	19.2	14.0	19.6	2 1/2 X 4 5/8
3900	500R392M350CE2E	23	18.4	15.0	21.0	2 1/2 X 5 1/8
3900	500R392M350DJ2E	23	18.4	14.0	19.6	3 X 3 5/8
4700	500R472M350CF2E	19	15.2	16.0	22.4	2 1/2 X 5 5/8
4700	500R472M350DC2E	19	15.2	16.0	22.4	3 X 4 1/8
5000	500R502M350CP2E	18	14.4	18.0	25.2	2 1/2 X 5 7/8
5600	500R562M350DD2E	16	12.8	18.0	25.2	3 X 4 5/8
6200	500R622M350DE2E	15	12.0	19.0	26.6	3 X 5 1/8
6800	500R682M350DF2E	14	11.2	21.0	29.4	3 X 5 5/8
6800	500R682M350FC2E	16	12.8	20.2	28.3	3 1/2 X 4 1/8
7000	500R702M350CN2E	13	10.4	23.0	32.2	2 1/2 X 7 5/8
7200	500R722M350DP2E	13	10.4	22.0	30.8	3 X 5 7/8
7700	500R772M350FD2E	14	11.2	21.6	30.2	3 1/2 X 4 5/8
8200	500R822M350CG2E	12	9.6	24.0	33.6	2 1/2 X 8 5/8
8200	500R822M350FE2E	12	9.6	24.0	33.6	3 1/2 X 5 1/8
10000	500R103M350DN2E	9	7.2	28.0	39.2	3 X 7 5/8
10000	500R103M350FF2E	10	8.0	27.7	38.8	3 1/2 X 5 5/8
12000	500R123M350DG2E	8	6.4	32.5	45.5	3 X 8 5/8
15000	500R153M350FN2E	6	4.8	38.1	53.4	3 1/2 X 7 5/8
18000	500R183M350FG2E	6	4.8	44.6	62.5	3 1/2 X 8 5/8
400 Vdc (450 Vdc Surge)						
2,200	500R222M400BC2B	44.0	35.2	8.3	11.7	2 X 4 1/8
2,200	500R222M400BD2B	40.0	32.0	9.7	13.5	2 X 4 5/8
2,700	500R272M400BE2B	37.0	29.6	10.5	14.7	2 X 5 1/8
2,700	500R272M400CJ2E	37.0	29.6	10.1	14.2	2 1/2 X 3 5/8
3,000	500R302M400BF2B	35.0	28.0	11.0	15.4	2 X 5 5/8
3,300	500R332M400CC2E	31.0	24.8	11.8	16.5	2 1/2 X 4 1/8
3,600	500R362M400CD2E	27.0	21.6	13.1	18.3	2 1/2 X 4 5/8
3,900	500R392M400CE2E	25.0	20.0	13.8	19.3	2 1/2 X 5 1/8
3,900	500R392M400DJ2E	26.0	20.8	13.7	19.1	3 X 3 5/8
4,700	500R472M400CF2E	22.0	17.6	15.4	21.5	2 1/2 X 5 5/8
4,800	500R482M400DC2E	22.0	17.6	15.2	21.3	3 X 4 1/8
5,000	500R502M400CP2E	20.0	16.0	17.1	24.0	2 1/2 X 5 7/8
5,600	500R562M400DD2E	19.0	15.2	16.8	23.6	3 X 4 5/8
6,300	500R632M400DE2E	17.0	13.6	18.6	26.0	3 X 5 1/8

Cap (µF)	Catalog Part Number	ESR Max. 25 °C 120 Hz (mΩ)	ESR Max. 25 °C 10kHz (mΩ)	Ripple Amps. 85 °C 120 Hz (A)	Ripple Amps. 85 °C >3 kHz (A)	Nominal Size D x L (in)
400 Vdc (450 Vdc Surge)						
6,700	500R672M400FC2E	16.0	12.8	20.0	28.1	3 1/2 X 4 1/8
6,800	500R682M400DF2E	16.0	12.8	19.9	27.9	3 X 5 5/8
6,900	500R692M400CN2E	15.0	12.0	21.2	29.7	2 1/2 X 7 5/8
7,200	500R722M400DP2E	15.0	12.0	20.7	29.0	3 X 5 7/8
7,300	500R732M400FD2E	14.0	11.2	21.6	30.2	3 1/2 X 4 5/8
8,200	500R822M400CG2E	13.0	10.4	24.1	33.7	2 1/2 X 8 5/8
8,200	500R822M400FE2E	13.0	10.4	24.0	33.6	3 1/2 X 5 1/8
9,200	500R922M400DN2E	12.0	9.6	24.4	34.2	3 X 7 5/8
10,000	500R103M400DG2E	10.0	8.0	27.6	38.6	3 X 8 5/8
10,000	500R103M400FF2E	10.0	8.0	27.3	38.2	3 1/2 X 5 5/8
11,000	500R113M400FF2E	10.0	8.0	28.3	39.7	3 1/2 X 5 7/8
13,000	500R133M400FN2E	8.0	6.4	32.9	46.0	3 1/2 X 7 5/8
15,000	500R153M400FG2E	7.0	5.6	38.4	53.7	3 1/2 X 8 5/8
420 Vdc (470 Vdc Surge)						
1,600	500R162M420BC2B	81.0	64.8	6.7	9.4	2 X 4 1/8
1,700	500R172M420BD2B	75.0	60.0	7.7	10.7	2 X 4 5/8
1,900	500R192M420CJ2E	71.0	56.8	7.2	10.1	2 1/2 X 3 5/8
2,100	500R212M420BE2B	62.0	49.6	8.7	12.2	2 X 5 1/8
2,200	500R222M420BF2B	58.0	46.4	9.2	12.9	2 X 5 5/8
2,400	500R242M420CC2E	58.0	46.4	8.6	12.0	2 1/2 X 4 1/8
2,600	500R262M420CD2E	50.0	40.0	9.6	13.5	2 1/2 X 4 5/8
2,800	500R282M420CE2E	46.0	36.8	10.2	14.3	2 1/2 X 5 1/8
2,800	500R282M420DJ2E	49.0	39.2	10.7	14.9	3 X 3 5/8
3,400	500R342M420CF2E	39.0	31.2	11.5	16.1	2 1/2 X 5 5/8
3,400	500R342M420DC2E	40.0	32.0	12.2	17.1	3 X 4 1/8
3,600	500R362M420CP2E	37.0	29.6	12.8	18.0	2 1/2 X 5 7/8
4,000	500R402M420DD2E	35.0	28.0	13.4	18.7	3 X 4 5/8
4,500	500R452M420DE2E	29.0	23.2	15.2	21.3	3 X 5 1/8
4,900	500R492M420CN2E	27.0	21.6	16.3	22.8	2 1/2 X 7 5/8
4,900	500R492M420DF2E	26.0	20.8	16.7	23.4	3 X 5 5/8
5,000	500R502M420FC2E	28.0	22.4	15.3	21.4	3 1/2 X 4 1/8
5,200	500R522M420DP2E	26.0	20.8	17.1	23.9	3 X 5 7/8
5,500	500R552M420FD2E	26.0	20.8	16.8	23.5	3 1/2 X 4 5/8
5,900	500R592M420CG2E	23.0	18.4	18.6	26.1	2 1/2 X 8 5/8
6,400	500R642M420FE2E	22.0	17.6	19.9	27.9	3 1/2 X 5 1/8
6,600	500R662M420DN2E	20.0	16.0	20.3	28.4	3 X 7 5/8
7,400	500R742M420FF2E	18.0	14.4	23.0	32.2	3 1/2 X 5 5/8
7,800	500R782M420DG2E	17.0	13.6	22.8	31.9	3 X 8 5/8
8,600	500R862M420FN2E	16.0	12.8	27.4	38.4	3 1/2 X 7 5/8
11,000	500R113M420FG2E	13.0	10.4	32.8	46.0	3 1/2 X 8 5/8

Type 500R 85 °C High Ripple Current, Inverter Grade, Aluminum

New Higher Ripple Current than Type 500C Screw Terminal Type

Cap (µF)	Catalog Part Number	ESR Max. 25 °C 120 Hz (mΩ)	ESR Max. 25 °C 10kHz (mΩ)	Ripple Amps. 85 °C 120 Hz (A)	Ripple Amps. 85 °C >3 kHz (A)	Nominal Size D x L (in)
450 Vdc (500 Vdc Surge)						
1400	500R142M450BC2B	104	83.2	6.0	8.4	2 X 4 1/8
1600	500R162M450BD2B	89	71.2	7.0	9.8	2 X 4 5/8
1900	500R192M450BE2B	73	58.4	8.1	11.4	2 X 5 1/8
2000	500R202M450BF2B	71	56.8	8.4	11.8	2 X 5 5/8
2000	500R202M450CJ2E	72	57.6	7.9	11.0	2 1/2 X 3 5/8
2500	500R252M450CC2E	55	44.0	9.6	13.5	2 1/2 X 4 1/8
2700	500R272M450CD2E	51	40.8	10.2	14.3	2 1/2 X 4 5/8
2900	500R292M450DJ2E	50	40.0	10.5	14.8	3 X 3 5/8
3100	500R312M450CE2E	45	36.0	11.1	15.5	2 1/2 X 5 1/8
3500	500R352M450CF2E	40	32.0	12.0	16.8	2 1/2 X 5 5/8
3600	500R362M450DC2E	41	32.8	12.1	16.9	3 X 4 1/8
3700	500R372M450CP2E	38	30.4	13.4	18.7	2 1/2 X 5 7/8
4200	500R422M450DD2E	35	28.0	13.4	18.7	3 X 4 5/8
4700	500R472M450DE2E	30	24.0	14.9	20.9	3 X 5 1/8
5200	500R522M450CN2E	27	21.6	17.0	23.8	2 1/2 X 7 5/8
5200	500R522M450DF2E	26	20.8	17.0	23.8	3 X 5 5/8
5500	500R552M450FC2E	29	23.2	15.0	21.0	3 1/2 X 4 1/8
5600	500R562M450DP2E	26	20.8	18.0	25.2	3 X 5 7/8
5900	500R592M450FD2E	25	20.0	17.1	24.0	3 1/2 X 4 5/8
6200	500R622M450CG2E	23	18.4	19.3	27.0	2 1/2 X 8 5/8
6900	500R692M450DN2E	21	16.8	21.0	29.4	3 X 7 5/8
6900	500R692M450FE2E	22	17.6	19.9	27.9	3 1/2 X 5 1/8
7800	500R782M450FF2E	21	16.8	21.3	29.8	3 1/2 X 5 5/8
8200	500R822M450DG2E	17	13.6	23.0	32.2	3 X 8 5/8
9400	500R942M450FN2E	17	13.6	26.1	36.6	3 1/2 X 7 5/8
11000	500R113M450FG2E	13	10.4	32.4	45.3	3 1/2 X 8 5/8

Cap (µF)	Catalog Part Number	ESR Max. 25 °C 120 Hz (mΩ)	ESR Max. 25 °C 10kHz (mΩ)	Ripple Amps. 85 °C 120 Hz (A)	Ripple Amps. 85 °C >3 kHz (A)	Nominal Size D x L (in)
500 Vdc (550 Vdc Surge)						
1100	500R112M500BC2B	136	108.8	5.3	7.4	2 X 4 1/8
1300	500R132M500BD2B	115	92.0	6.0	8.3	2 X 4 5/8
1500	500R152M500BE2B	98	78.4	6.7	9.4	2 X 5 1/8
1600	500R162M500CJ2E	93	74.4	6.8	9.5	2 1/2 X 3 5/8
1800	500R182M500BF2B	79	63.2	7.7	10.8	2 X 5 5/8
2000	500R202M500CC2E	76	60.8	8.1	11.4	2 1/2 X 4 1/8
2200	500R222M500CD2E	70	56.0	8.5	11.9	2 1/2 X 4 5/8
2300	500R232M500DJ2E	68	54.4	9.0	12.6	3 X 3 5/8
2400	500R242M500CE2E	62	49.6	9.3	13.0	2 1/2 X 5 1/8
2800	500R282M500CF2E	55	44.0	10.5	14.7	2 1/2 X 5 5/8
2800	500R282M500DC2E	54	43.2	10.5	14.7	3 X 4 1/8
2900	500R292M500CP2E	52	41.6	10.9	15.3	2 1/2 X 5 7/8
3300	500R332M500DD2E	48	38.4	11.2	15.7	3 X 4 5/8
3700	500R372M500DE2E	41	32.8	12.6	17.6	3 X 5 1/8
3700	500R372M500FC2E	42	33.6	13.0	18.1	3 1/2 X 4 1/8
4100	500R412M500CN2E	38	30.4	14.3	20.1	2 1/2 X 7 5/8
4100	500R412M500DF2E	37	29.6	13.9	19.4	3 X 5 5/8
4200	500R422M500FD2E	37	29.6	14.5	20.3	3 1/2 X 4 5/8
4400	500R442M500DP2E	35	28.0	14.3	20.0	3 X 5 7/8
4900	500R492M500CG2E	32	25.6	16.4	22.9	2 1/2 X 8 5/8
5400	500R542M500FE2E	29	23.2	17.2	24.0	3 1/2 X 5 1/8
5600	500R562M500FF2E	26	20.8	19.1	26.7	3 1/2 X 5 5/8
5700	500R572M500DN2E	25.971	20.8	19.2	26.9	3 X 7 5/8
6800	500R682M500DG2E	23	18.4	23.0	32.2	3 X 8 5/8
8200	500R822M500FN2E	18	14.4	25.7	35.9	3 1/2 X 7 5/8
8800	500R882M500FG2E	17	13.6	26.8	37.6	3 1/2 X 8 5/8

Type 500R 85 °C High Ripple Current, Inverter Grade, Aluminum

New Higher Ripple Current than Type 500C Screw Terminal Type

Typical Performance Curves

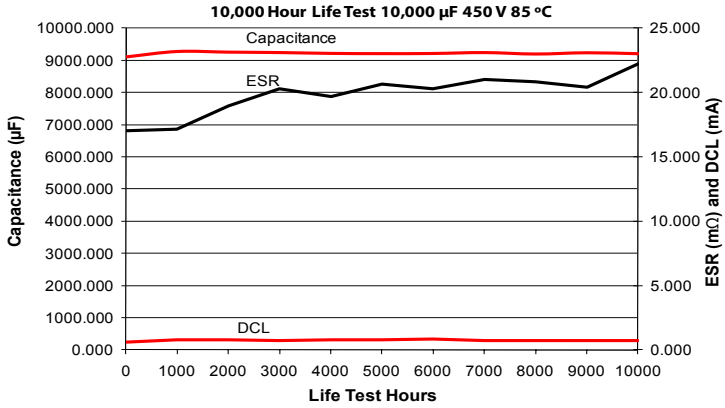

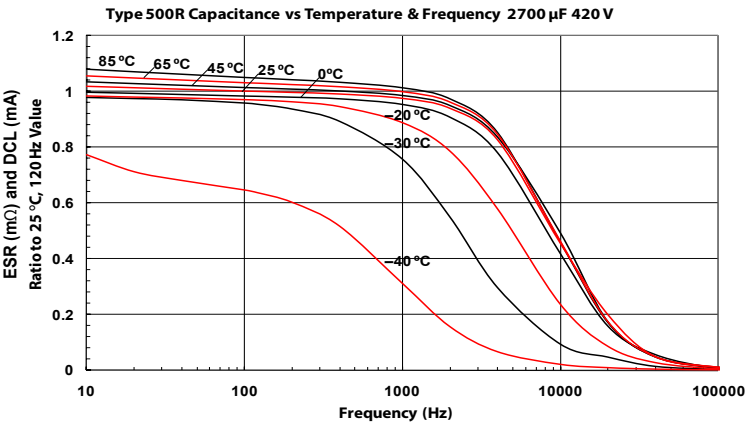

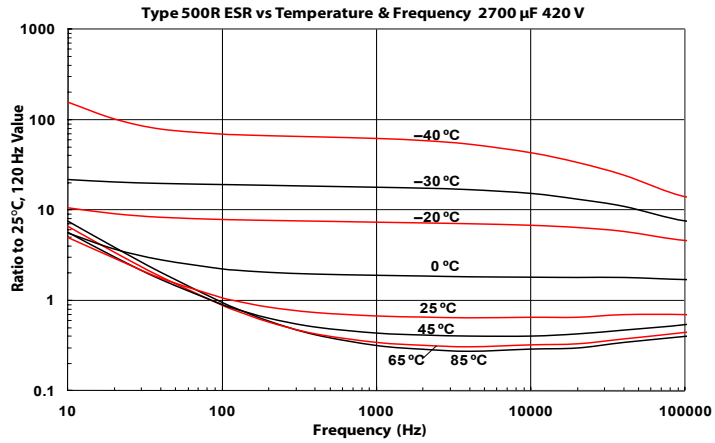

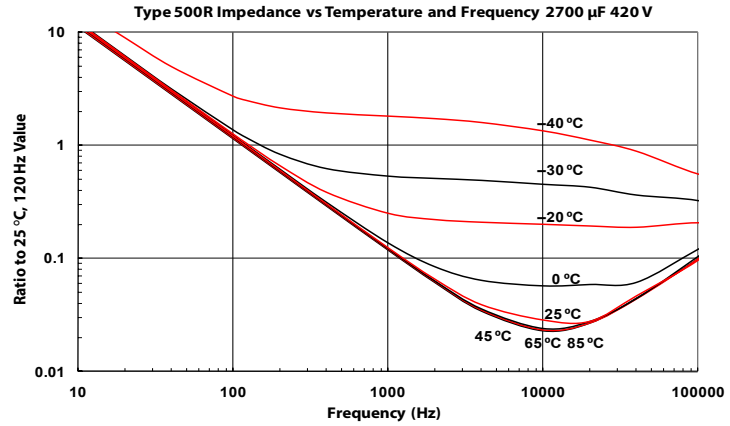

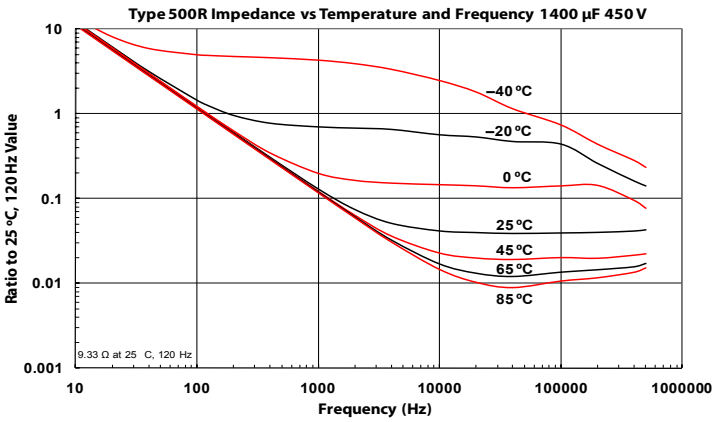

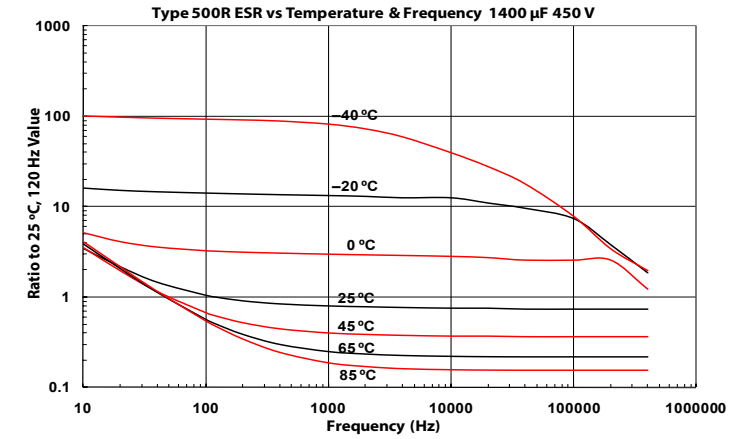

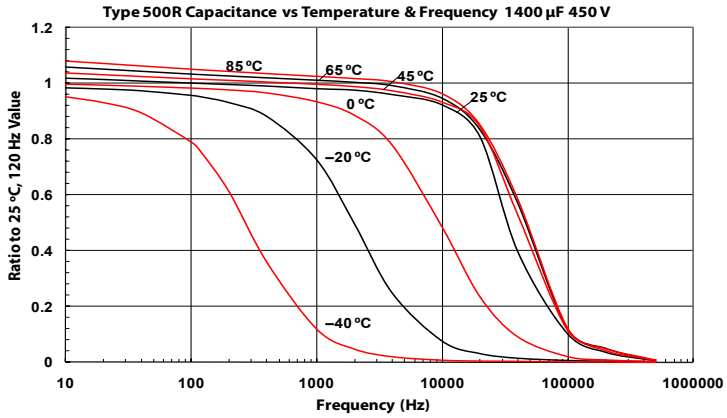

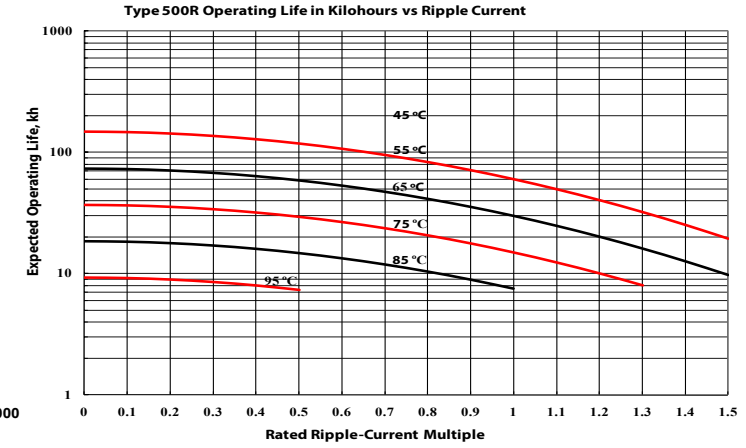

Notice and Disclaimer: All product drawings, descriptions, specifications, statements, information and data (collectively, the "Information") in this datasheet or other publication are subject to change. The customer is responsible for checking, confirming and verifying the extent to which the Information contained in this datasheet or other publication is applicable to an order at the time the order is placed. All Information given herein is believed to be accurate and reliable, but it is presented without any guarantee, warranty, representation or responsibility of any kind, expressed or implied. Statements of suitability for certain applications are based on the knowledge that the Cornell Dubilier company providing such statements ("Cornell Dubilier") has of operating conditions that such Cornell Dubilier company regards as typical for such applications, but are not intended to constitute any guarantee, warranty or representation regarding any such matter – and Cornell Dubilier specifically and expressly disclaims any guarantee, warranty or representation concerning the suitability for a specific customer application, use, storage, transportation, or operating environment. The Information is intended for use only by customers who have the requisite experience and capability to determine the correct products for their application. Any technical advice inferred from this Information or otherwise provided by Cornell Dubilier with reference to the use of any Cornell Dubilier products is given gratis (unless otherwise specified by Cornell Dubilier), and Cornell Dubilier assumes no obligation or liability for the advice given or results obtained. Although Cornell Dubilier strives to apply the most stringent quality and safety standards regarding the design and manufacturing of its products, in light of the current state of the art, isolated component failures may still occur. Accordingly, customer applications which require a high degree of reliability or safety should employ suitable designs or other safeguards (such as installation of protective circuitry or redundancies or other appropriate protective measures) in order to ensure that the failure of an electrical component does not result in a risk of personal injury or property damage. Although all product-related warnings, cautions and notes must be observed, the customer should not assume that all safety measures are indicated in such warnings, cautions and notes, or that other safety measures may not be required.

click here to see hardware and mounting options

Type 520C 85 °C Long Life, Inverter Grade, Aluminum

High Ripple, Long Life Screw Terminal Type

Type 520C is the 85 °C version of the Type 550C Inverter-Grade capacitor. It delivers the ripple-current capability and exceptional life needed for motor-drive bus capacitors and approaches the performance of the 550C at lower cost. It is rated for 8000 h life with full ripple current, rated voltage, 85 °C and 100 lfm airflow while mounted horizontally. Horizontal mounting is more severe than vertical mounting. The extended cathode foil of the 520C assures heat flow from the capacitor element to the can in all orientations.

Highlights

- 8,000 hour load life
- Ripple current to 55 amps
- ESRs to 8 mΩ
- Best value high ripple current
- Thermal-Pak™ extended cathode construction

Specifications

Temperature Range	–40 °C to +85 °C
Rated Voltage Range	200 Vdc to 500 Vdc
Capacitance Range	84 µF to 39,000 µF
Capacitance Tolerance	–10% +50%
Leakage Current	≤3 $\sqrt{CV}$ µA, 5 mA max, 5 minutes
Ripple Current Multipliers	Ambient Temperature

45 °C	55 °C	65 °C	75 °C	85 °C
1.80	1.63	1.45	1.25	1.00

Frequency	50 Hz	60 Hz	120 Hz	360 Hz	1 kHz	5 kHz	10 kHz & up
1 3/8" & 1 3/4" Diameters							
200 to 350 V	0.76	0.81	1.00	1.24	1.36	1.43	1.44
400 to 500 V	0.76	0.81	1.00	1.24	1.37	1.44	1.45
2" & 2 1/2" Diameters							
200 to 350 V	0.78	0.83	1.00	1.20	1.29	1.34	1.35
400 to 500 V	0.77	0.82	1.00	1.22	1.33	1.39	1.40
3" & 3 1/2" Diameters							
200 to 350 V	0.84	0.88	1.00	1.12	1.17	1.20	1.20
400 to 500 V	0.79	0.84	1.00	1.18	1.26	1.31	1.32

Low Temperature Characteristics	Impedance ratio: $Z_{-20°C}/Z_{+25°C}$ ≤ 3 (200–500 Vdc)
Endurance Life Test	8000 h at full load at 85 °C Δ Capacitance ±20% ESR 200% of limit DCL 100% of limit
Shelf Life Test	500 h at 85 °C Capacitance 100% of limit ESR 100% of limit DCL 100% of limit
Vibration	10 to 55 Hz, 0.06" and 10 g max, 1.5 h each of 2 axes
RoHS Compliant	

Type 520C 85 °C Long Life, Inverter Grade, Aluminum

High Ripple, Long Life Screw Terminal Type

Part Numbering System

520C	572	T	400	DF	2	B	S
Type	**Capacitance**	**Tolerance**	**Voltage**	**Case Code**	**Insulation**	**Terminal**	**Can Style**
	572 =5700 µF	**M** = ±20% **U** = –10%+75% **T** = –10%+50%	**200** = 200 Vdc **400** = 400 Vdc		**0**= None **1**= Polyester **2**= PVC	**A** = Low Post **B** = High Post **D** = High Current, Low Post **E** = High Current, High Post **F or M** = M5 Post **G** = M6 Low Post **H** = M6 High Post	**Blank**= Standard Can **S**= Stud Bottom **P**= Stud with Thermal Pad

Standard insulation is 0.008-in PVC sleeve with 0.01-in polypropylene end disk.
Polyester insulation is not available for 3.5 inch diameter units.

Outline Drawing

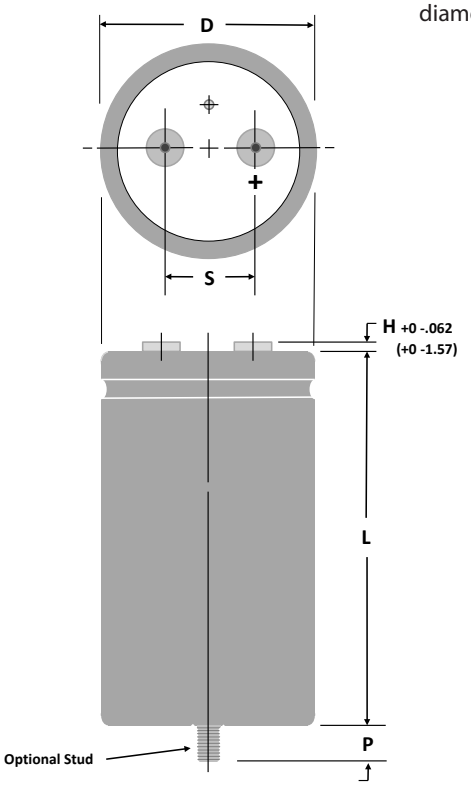

NOTE: With the stud-mount feature, a thermally-conductive disk can be inserted in the bottom flush with the outer insulating sleeve.This reduces the thermal resistance through the can bottom by 0.3 °C/W. Can Style P.

Stud Dimensions

Case Diam.	Stud Thread	P± 0.039" (±1.0 mm)
1.375	M8	0.470" (12.0)
1.750	M8	0.470" (12.0)
2.000	M12	0.630" (16.0)
2.500	M12	0.630" (16.0)
3.000	M12	0.630" (16.0)
3.500	M12	0.630" (16.0)

Terminal Dimensions

Terminal Style	For Case Diameters	Code	Post Diameter in	Post Diameter mm	H max in	H max mm	Thread	min Full Thread in	min Full Thread mm	Torque in·lb	Torque N·m
Low Post	1⅜ to 3	A	0.314	8.0	0.094	2.4	10–32	0.218	5.5	25	2.82
High Post	1⅜ to 3	B	0.314	8.0	0.281	7.1	10–32	0.375	9.5	25	2.82
High Current, Low	2½ to 3½	D	0.684	17.4	0.125	3.2	¼–28	0.344	8.7	50	5.65
High Current, High	2½ to 3½	E	0.684	17.4	0.281	7.1	¼–28	0.469	11.9	60	6.78
M5 Post, Small	1⅜ to 2	M	0.314	8.0	0.281	7.1	M5	0.375	9.5	25	2.82
M5 Post	2½ & 3	F	0.512	13.0	0.230	5.8	M5	0.344	8.7	25	2.82
M6 Low Post	2½ to 3½	G	0.684	17.4	0.125	3.2	M6	0.344	8.7	50	5.65
M6 High Post	2½ to 3½	H	0.684	17.4	0.281	7.1	M6	0.469	11.9	60	6.78

Type 520C 85 °C Long Life, Inverter Grade, Aluminum

High Ripple, Long Life Screw Terminal Type

Uninsulated Case Dimensions

For insulated case, add 0.024"(0.610 mm) to "D"and 0.030"(0.762 mm) to length.

	Diam. (D)		Length (L)		Terminals (S)		Typical Weight	
Case Code	±.031 Inches	±.78 mm	±.062 Inches	±1.57 mm	±0.015 Inches	±.38 mm	oz	g
AK	1.375	34.93	1.625	41.28	0.50	12.70	1.9	54
AA	1.375	34.93	2.125	53.98	0.50	12.70	2.0	57
AH	1.375	34.93	2.625	66.68	0.50	12.70	2.7	77
AB	1.375	34.93	3.125	79.38	0.50	12.70	3.3	94
AJ	1.375	34.93	3.625	92.08	0.50	12.70	3.8	108
AC	1.375	34.93	4.125	104.78	0.50	12.70	4.4	125
AD	1.375	34.93	4.625	117.48	0.50	12.70	5.1	145
AE	1.375	34.93	5.125	130.18	0.50	12.70	6.8	193
AF	1.375	34.93	5.625	142.88	0.50	12.70	8.1	230
EA	1.750	44.45	2.125	53.98	0.75	19.05	2.7	76
EH	1.750	44.45	2.625	66.68	0.75	19.05	3.8	108
EB	1.750	44.45	3.125	79.38	0.75	19.05	5.1	145
EJ	1.750	44.45	3.625	92.08	0.75	19.05	6.8	193
EC	1.750	44.45	4.125	104.78	0.75	19.05	8.1	230
ED	1.750	44.45	4.625	117.48	0.75	19.05	9.0	255
EE	1.750	44.45	5.125	130.18	0.75	19.05	9.5	269
EF	1.750	44.45	5.625	142.88	0.75	19.05	10.5	298
BA	2.000	50.80	2.125	53.98	0.88	22.23	5.4	153
BH	2.000	50.80	2.625	66.68	0.88	22.23	6.1	173
BB	2.000	50.80	3.125	79.38	0.88	22.23	6.8	193
BJ	2.000	50.80	3.625	92.08	0.88	22.23	8.2	232
BC	2.000	50.80	4.125	104.78	0.88	22.23	9.5	269
BD	2.000	50.80	4.625	117.48	0.88	22.23	10.3	292
BE	2.000	50.80	5.125	130.18	0.88	22.23	10.7	303
BF	2.000	50.80	5.625	142.88	0.88	22.23	13.0	369
CH	2.500	63.50	2.625	66.68	1.13	28.58	9.2	261
CB	2.500	63.50	3.125	79.38	1.13	28.58	10.4	295
CJ	2.500	63.50	3.625	92.08	1.13	28.58	12.7	361
CC	2.500	63.50	4.125	104.78	1.13	28.58	15.0	425
CD	2.500	63.50	4.625	117.48	1.13	28.58	17.2	488
CE	2.500	63.50	5.125	130.18	1.13	28.58	19.3	547
CF	2.500	63.50	5.625	142.88	1.13	28.58	21.4	607
DB	3.000	76.20	3.125	79.38	1.25	31.75	16.7	473
DJ	3.000	76.20	3.625	92.08	1.25	31.75	20.0	567
DC	3.000	76.20	4.125	104.78	1.25	31.75	22.2	629
DD	3.000	76.20	4.625	117.48	1.25	31.75	25.5	723
DE	3.000	76.20	5.125	130.18	1.25	31.75	30.0	850
DF	3.000	76.20	5.625	142.88	1.25	31.75	31.9	904
DM	3.000	76.20	6.625	168.28	1.25	31.75	34.4	933.5
DP	3.000	76.20	5.875	149.23	1.25	31.75	32.8	931
DN	3.000	76.20	7.625	193.68	1.25	31.75	39.5	1119
DG	3.000	76.20	8.625	219.08	1.25	31.75	43.3	1227
FC	3.500	88.90	4.125	104.78	1.25	31.75	30.0	850
FD	3.500	88.90	4.625	117.48	1.25	31.75	34.4	976
FE	3.500	88.90	5.125	130.18	1.25	31.75	40.5	1148
FF	3.500	88.90	5.625	142.88	1.25	31.75	43.1	1221
FP	3.500	88.90	5.875	149.23	1.25	31.75	44.3	1257
FN	3.500	88.90	7.625	193.68	1.25	31.75	53.3	1512
FG	3.500	88.90	8.625	219.08	1.25	31.75	58.5	1658
FM	3.500	88.90	6.625	168.28	1.25	31.75	46.4	1315.4

Type 520C 85 °C Long Life, Inverter Grade, Aluminum

High Ripple, Long Life Screw Terminal Type

Ratings

Additional Smaller Sizes available at www.cde.com/catalogs/520C.pdf

Cap. (µF)	Catalog Part Number	ESR Max. @ 25 °C 120 Hz (mΩ)	Ripple Max. @ 85 °C 120 Hz (A)	Nominal Size D x L (inches)
200 Vdc (250 Vdc Surge)				
3200	520C322T200CH2B	44.3	9.0	2 1/2 x 2 5/8
4400	520C442T200CB2B	32.8	11.1	2 1/2 x 3 1/8
5700	520C572T200CJ2B	23.4	13.8	2 1/2 x 3 5/8
6400	520C642T200DB2B	31.8	12.6	3 x 3 1/8
7000	520C702T200CC2B	21.3	15.1	2 1/2 x 4 1/8
8200	520C822T200CD2B	18.2	17.0	2 1/2 x 4 5/8
8200	520C822T200DJ2B	24.9	15.0	3 x 3 5/8
9500	520C952T200CD2B	16.6	18.4	2 1/2 x 5 1/8
10000	520C103T200DC2B	20.7	17.1	3 x 4 1/8
11000	520C113T200CF2B	14.4	20.4	2 1/2 x 5 5/8
12000	520C123T200DD2B	17.7	19.2	3 x 4 5/8
14000	520C143T200DE2B	18.0	19.7	3 x 5 1/8
15000	520C153T200FC2D	15.6	21.7	3 1/2 x 4 1/8
16000	520C163T200DF2B	14.0	23.0	3 x 5 5/8
16000	520C163T200DP2B	16.1	21.7	3 x 5 7/8
17000	520C173T200FD2D	13.3	24.4	3 1/2 x 4 5/8
20000	520C203T200FE2D	14.1	24.4	3 1/2 x 5 1/8
22000	520C223T200DN2D	12.3	27.6	3 x 7 5/8
23000	520C233T200FF2D	12.6	26.5	3 1/2 x 5 5/8
24000	520C243T200FP2D	12.0	27.5	3 1/2 x 5 7/8
26000	520C263T200DG2D	10.1	31.0	3 x 8 5/8
34000	520C343T200FN2D	9.7	33.6	3 1/2 x 7 5/8
39000	520C393T200FG2D	8.3	37.2	3.5 x 8 5/8
250 Vdc (300 Vdc Surge)				
2100	520C212T250CH2B	54.2	8.2	2 1/2 x 2 5/8
3000	520C302T250CB2B	33.6	11.0	2 1/2 x 3 1/8
3900	520C392T250CJ2B	26.3	13.0	2 1/2 x 3 5/8
4300	520C432T250DB2B	29.0	13.2	3 x 3 1/8
4700	520C472T250CC2B	21.8	15.0	2 1/2 x 4 1/8
5600	520C562T250CD2B	18.6	16.8	2 1/2 x 4 5/8
5600	520C562T250DJ2B	22.7	15.7	3 x 3 5/8
6400	520C642T250CD2B	16.3	18.6	2 1/2 x 5 1/8
6800	520C682T250DC2B	18.5	18.2	3 x 4 1/8
7300	520C732T250CF2B	14.5	20.3	2 1/2 x 5 5/8
8000	520C802T250DD2B	17.1	19.5	3 x 4 5/8
9300	520C932T250DE2B	15.0	21.6	3 x 5 1/8
10000	520C103T250FC2D	20.4	19.0	3 1/2 x 4 1/8
11000	520C113T250DF2B	12.6	24.3	3 x 5 5/8
11000	520C113T250DP2B	12.1	25.1	3 x 5 7/8
12000	520C123T250FD2D	18.1	20.9	3 1/2 x 4 5/8
14000	520C143T250FE2D	15.8	23.0	3 1/2 x 5 1/8
15000	520C153T250FF2D	13.9	25.3	3 1/2 x 5 5/8
16000	520C163T250DN2B	9.1	32.2	3 x 7 5/8

Cap. (µF)	Catalog Part Number	ESR Max. @ 25 °C 120 Hz (mΩ)	Ripple Max. @ 85 °C 120 Hz (A)	Nominal Size D x L (inches)
250 Vdc (300 Vdc Surge)				
16000	520C163T250FP2D	13.5	26.0	3 1/2 x 5 7/8
18000	520C183T250DG2D	7.4	36.2	3 x 8 5/8
22000	520C223T250FN2D	11.0	31.5	3 1/2 x 7 5/8
26000	520C263T250FG2D	9.6	34.6	3 1/2 x 8 5/8
300 Vdc (350 Vdc Surge)				
1600	520C162T300CH2B	59.5	7.8	2 1/2 x 2 5/8
2200	520C222T300CB2B	48.8	9.1	2 1/2 x 3 1/8
2900	520C292T300CJ2B	40.0	10.6	2 1/2 x 3 5/8
3400	520C342T300DB2B	44.9	10.6	3 x 3 1/8
3500	520C352T300CC2B	31.4	12.5	2 1/2 x 4 1/8
4100	520C412T300CD2B	26.8	14.0	2 1/2 x 4 5/8
4300	520C432T300DJ2B	35.7	12.5	3 x 3 5/8
4800	520C482T300CD2B	23.3	15.5	2 1/2 x 5 1/8
5300	520C532T300DC2B	27.5	14.9	3 x 4 1/8
5400	520C542T300CF2B	20.7	17.0	2 1/2 x 5 5/8
6300	520C632T300DD2B	24.8	16.3	3 x 4 5/8
7200	520C722T300DE2B	21.5	18.0	3 x 5 1/8
7400	520C742T300FC2D	22.1	18.2	3 1/2 x 4 1/8
8200	520C822T300DF2B	18.9	19.8	3 x 5 5/8
8700	520C872T300DP2B	17.9	20.6	3 x 5 7/8
8800	520C882T300FD2D	19.1	20.3	3 1/2 x 4 5/8
10000	520C103T300FE2D	16.8	22.3	3 1/2 x 5 1/8
11000	520C113T300FF2D	15.0	24.4	3 1/2 x 5 5/8
12000	520C123T300DN2B	13.8	26.1	3 x 7 5/8
12000	520C123T300FP2D	14.2	25.3	3 1/2 x 5 7/8
14000	520C143T300DG2B	11.3	29.3	3 x 8 5/8
17000	520C173T300FN2D	11.5	30.9	3 1/2 x 7 5/8
20000	520C203T300FG2D	9.8	34.2	3 1/2 x 8 5/8
350 Vdc (400 Vdc Surge)				
1500	520C152T350CH2B	91.3	6.3	2 1/2 x 2 5/8
2000	520C202T350CB2B	64.0	8.0	2 1/2 x 3 1/8
2600	520C262T350CJ2B	51.0	9.4	2 1/2 x 3 5/8
3100	520C312T350DB2B	56.6	9.5	3 x 3 1/8
3200	520C322T350CC2B	41.9	10.8	2 1/2 x 4 1/8
3800	520C382T350CD2B	35.7	12.1	2 1/2 x 4 5/8
4000	520C402T350DJ2B	43.8	11.3	3 x 3 5/8
4400	520C442T350CD2B	31.1	13.5	2 1/2 x 5 1/8
4800	520C482T350DC2B	36.5	12.9	3 x 4 1/8
4900	520C492T350CF2B	27.6	14.7	2 1/2 x 5 5/8
5700	520C572T350DD2B	31.0	14.5	3 x 4 5/8
6600	520C662T350DE2B	27.1	16.1	3 x 5 1/8
6800	520C682T350FC2D	31.4	15.3	3 1/2 x 4 1/8
7500	520C752T350DF2B	24.1	17.5	3 x 5 5/8

Type 520C 85 °C Long Life, Inverter Grade, Aluminum

High Ripple, Long Life Screw Terminal Type

Additional Smaller Sizes available at www.cde.com/catalogs/520C.pdf

Cap. (µF)	Catalog Part Number	ESR Max. @ 25 °C 120 Hz (mΩ)	Ripple Max. @ 85 °C 120 Hz (A)	Nominal Size D x L (inches)
350 Vdc (400 Vdc Surge)				
7900	520C792T350DP2B	22.8	18.3	3 x 5 7/8
8000	520C802T350FD2D	27.0	17.1	3 1/2 x 4 5/8
9200	520C922T350FE2D	23.6	18.9	3 1/2 x 5 1/8
10000	520C103T350FF2D	21.0	20.6	3 1/2 x 5 5/8
10000	520C103T350FF2D	21.0	20.6	3 1/2 x 5 5/8
11000	520C113T350FP2D	19.9	21.4	3 1/2 x 5 7/8
13000	520C133T350DG2B	14.9	25.5	3 x 8 5/8
15000	520C153T350FN2D	15.7	26.7	3 1/2 x 7 5/8
18000	520C183T350FG2D	13.0	29.7	3 1/2 x 8 5/8
400 Vdc (450 Vdc Surge)				
1100	520C112T400CH2B	97.8	6.1	2 1/2 x 2 5/8
1600	520C162T400CB2B	68.6	7.7	2 1/2 x 3 1/8
2000	520C202T400CJ2B	54.6	9.1	2 1/2 x 3 5/8
2400	520C242T400CC2B	44.9	10.4	2 1/2 x 4 1/8
2400	520C242T400DB2B	60.4	9.2	3 x 3 1/8
2900	520C292T400CD2B	47.1	10.6	2 1/2 x 4 5/8
3000	520C302T400DJ2B	47.1	10.9	3 x 3 5/8
3300	520C332T400CD2B	33.0	13.0	2 1/2 x 5 1/8
3700	520C372T400DC2B	38.8	12.5	3 x 4 1/8
3800	520C382T400CF2B	33.0	13.5	2 1/2 x 5 5/8
4400	520C442T400DD2B	29.5	14.9	3 x 4 5/8
5000	520C502T400DE2B	28.8	15.6	3 x 5 1/8
5200	520C522T400FC2D	33.5	14.8	3 1/2 x 4 1/8
5700	520C572T400DF2B	25.6	17.0	3 x 5 5/8
6100	520C612T400DP2B	24.3	17.7	3 x 5 7/8
6100	520C612T400FD2D	28.8	16.6	3 1/2 x 4 5/8
7000	520C702T400FE2D	25.1	18.3	3 1/2 x 5 1/8
8000	520C802T400FF2D	22.3	20.0	3 1/2 x 5 5/8
8400	520C842T400DN2B	19.1	22.2	3 x 7 5/8
8500	520C852T400FP2D	21.1	20.8	3 1/2 x 5 7/8
9800	520C982T400DG2B	15.8	24.8	3 x 8 5/8
12000	520C123T400FN2D	16.6	25.9	3 1/2 x 7 5/8
14000	520C143T400FG2D	13.8	28.8	3 1/2 x 8 5/8
450 Vdc (500 Vdc Surge)				
920	520C921T450CH2B	114.0	5.6	2 1/2 x 2 5/8
1300	520C132T450CB2B	81.9	7.0	2 1/2 x 3 1/8
1600	520C162T450CJ2B	63.5	8.4	2 1/2 x 3 5/8
1900	520C192T450DB2B	52.6	9.8	3 x 3 1/8
2000	520C202T450CC2B	49.8	9.9	2 1/2 x 4 1/8
2400	520C242T450CD2B	42.3	11.1	2 1/2 x 4 5/8

Cap. (µF)	Catalog Part Number	ESR Max. @ 25 °C 120 Hz (mΩ)	Ripple Max. @ 85 °C 120 Hz (A)	Nominal Size D x L (inches)
450 Vdc (500 Vdc Surge)				
2500	520C252T450DJ2B	40.3	11.8	3 x 3 5/8
2700	520C272T450CE2B	38.9	12.0	2 1/2 x 5 1/8
3100	520C312T450CF2B	32.7	13.5	2 1/2 x 5 5/8
3100	520C312T450DC2B	33.0	13.6	3 x 4 1/8
3600	520C362T450DD2B	27.8	15.3	3 x 4 5/8
4200	520C422T450DE2B	23.9	17.1	3 x 5 1/8
4300	520C432T450FC2D	23.9	17.5	3 1/2 x 4 1/8
4700	520C472T450DF2B	21.3	18.7	3 x 5 5/8
5000	520C502T450DP2B	20.0	19.5	3 x 5 7/8
5000	520C502T450FD2D	20.0	19.9	3 1/2 x 4 5/8
5800	520C582T450FE2D	17.6	21.8	3 1/2 x 5 1/8
6600	520C662T450FF2D	15.1	24.2	3 1/2 x 5 5/8
7000	520C702T450FP2D	14.3	25.2	3 1/2 x 5 7/8
7000	520C702T450DN2B	15.0	25.0	3 x 7 5/8
8100	520C812T450DG2B	12.5	27.9	3 x 8 5/8
9500	520C952T450FN2D	11.0	32.0	3 1/2 x 7 5/8
11000	520C113T450FG2D	9.1	35.5	3 1/2 x 8 5/8
500 Vdc (550 Vdc Surge)				
630	520C631T500CH2B	165.0	4.7	2 1/2 x 2 5/8
890	520C891T500CB2B	118.0	5.9	2 1/2 x 3 1/8
1100	520C112T500CJ2B	91.9	7.0	2 1/2 x 3 5/8
1300	520C132T500DB2B	77.1	8.1	3 x 3 1/8
1400	520C142T500CC2B	73.1	8.2	2 1/2 x 4 1/8
1600	520C162T500CD2B	63.2	9.1	2 1/2 x 4 5/8
1700	520C172T500DJ2B	60.1	9.7	3 x 3 5/8
1900	520C192T500CD2B	54.9	10.1	2 1/2 x 5 1/8
2100	520C212T500DC2B	49.4	11.1	3 x 4 1/8
2200	520C222T500CF2B	46.2	11.4	2 1/2 x 5 5/8
2500	520C252T500DD2B	42.0	12.5	3 x 4 5/8
2900	520C292T500DE2B	36.5	13.8	3 x 5 1/8
3000	520C302T500FC2D	35.7	14.4	3 1/2 x 4 1/8
3300	520C332T500DF2B	32.4	15.1	3 x 5 5/8
3500	520C352T500DP2B	30.6	15.8	3 x 5 7/8
3500	520C352T500FD2D	30.3	16.1	3 1/2 x 4 5/8
4000	520C402T500FE2D	26.4	17.8	3 1/2 x 5 1/8
4600	520C462T500FF2D	23.4	19.5	3 1/2 x 5 5/8
4800	520C482T500FP2D	22.2	20.3	3 1/2 x 5 7/8
4800	520C482T500DN2B	23.9	19.8	3 x 7 5/8
5600	520C562T500DG2B	19.7	22.2	3 x 8 5/8
6700	520C672T500FN2D	17.3	25.4	3 1/2 x 7 5/8

Type 520C 85 °C Long Life, Inverter Grade, Aluminum

High Ripple, Long Life Screw Terminal Type

Typical Performance Curves

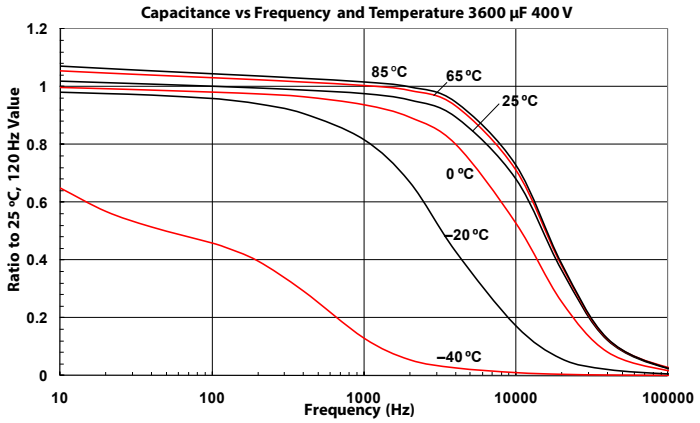

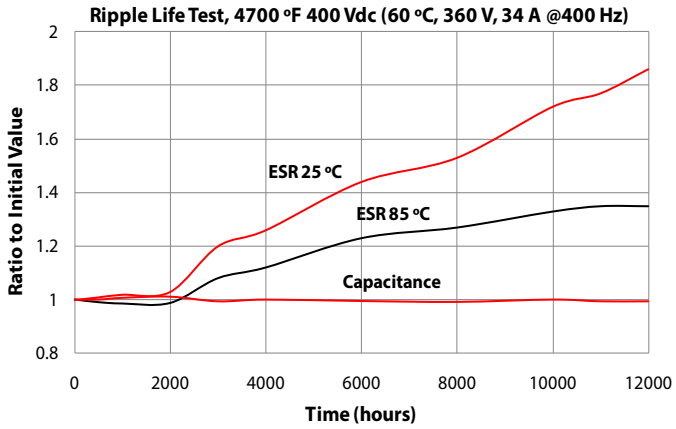

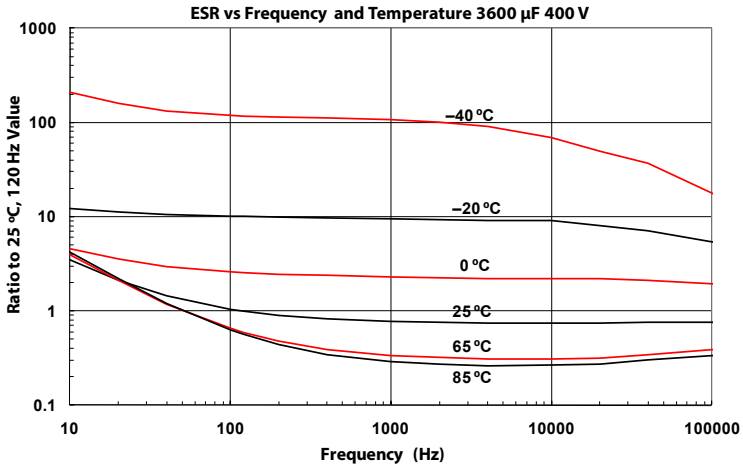

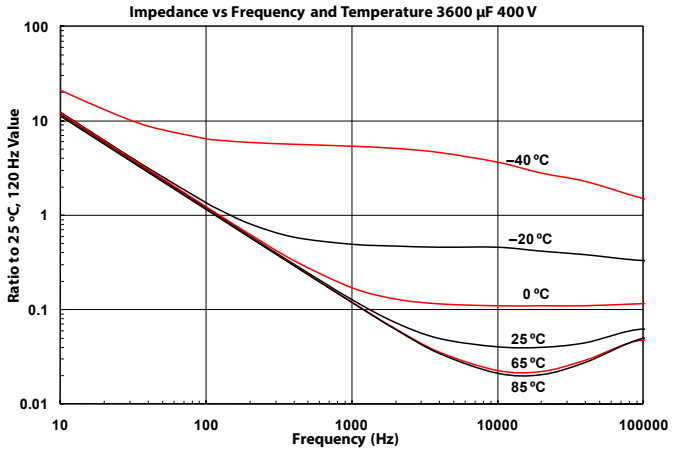

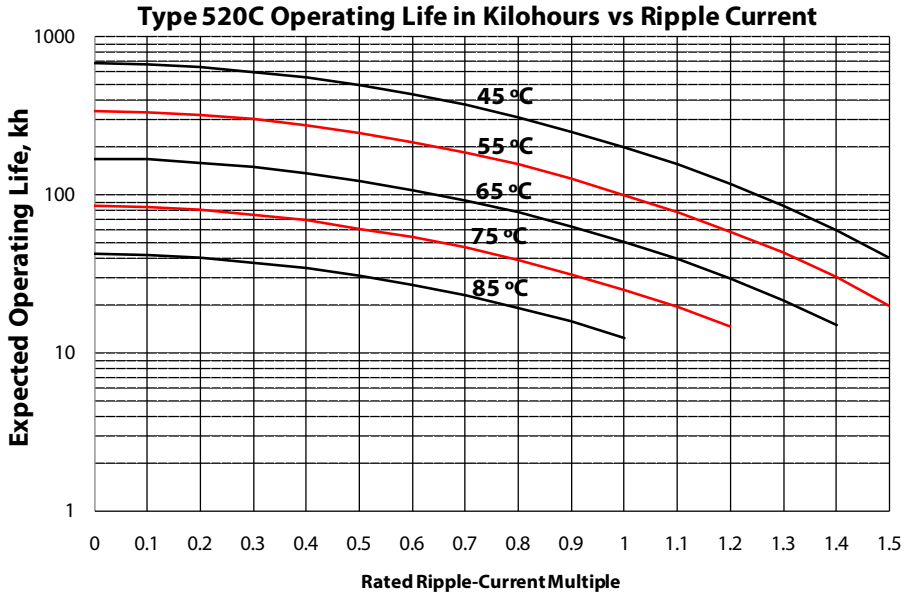

Notice and Disclaimer: All product drawings, descriptions, specifications, statements, information and data (collectively, the "Information") in this datasheet or other publication are subject to change. The customer is responsible for checking, confirming and verifying the extent to which the Information contained in this datasheet or other publication is applicable to an order at the time the order is placed. All Information given herein is believed to be accurate and reliable, but it is presented without any guarantee, warranty, representation or responsibility of any kind, expressed or implied. Statements of suitability for certain applications are based on the knowledge that the Cornell Dubilier company providing such statements ("Cornell Dubilier") has of operating conditions that such Cornell Dubilier company regards as typical for such applications, but are not intended to constitute any guarantee, warranty or representation regarding any such matter – and Cornell Dubilier specifically and expressly disclaims any guarantee, warranty or representation concerning the suitability for a specific customer application, use, storage, transportation, or operating environment. The Information is intended for use only by customers who have the requisite experience and capability to determine the correct products for their application. Any technical advice inferred from this Information or otherwise provided by Cornell Dubilier with reference to the use of any Cornell Dubilier products is given gratis (unless otherwise specified by Cornell Dubilier), and Cornell Dubilier assumes no obligation or liability for the advice given or results obtained. Although Cornell Dubilier strives to apply the most stringent quality and safety standards regarding the design and manufacturing of its products, in light of the current state of the art, isolated component failures may still occur. Accordingly, customer applications which require a high degree of reliability or safety should employ suitable designs or other safeguards (such as installation of protective circuitry or redundancies or other appropriate protective measures) in order to ensure that the failure of an electrical component does not result in a risk of personal injury or property damage. Although all product-related warnings, cautions and notes must be observed, the customer should not assume that all safety measures are indicated in such warnings, cautions and notes, or that other safety measures may not be required.

click here to see hardware and mounting options

Type 550 105 °C High Ripple, Long-life, Inverter Grade, Aluminum

High Ripple, Long Life, Computer Grade

High Value, High Ripple Current

Type 550 is the original Inverter Grade capacitor for continuous operation at up to 105 °C and it now is available in low voltages too. For best value its load life test is 2000 hours instead of the 5000 hours of the Type 550C. While less than half the life capability of the Type 550C, it is lower cost and easily lasts more than 10 years in typical industrial applications.

Highlights

- 2,000 hour load life
- Ripple current to >50 amps
- ESRs to 2.5 mΩ

RoHS Compliant

Specifications

Operating Temperature: –40 °C to +105 °C

Rated Voltage: 6.3 to 450 Vdc

Capacitance: 90 µF to 1.5 F

Capacitance Tolerance: Vdc ≤ 150 V: –10 +75%, Vdc > 150 V: –10 +50%

DCLeakage Current: $\leq 3\sqrt{CV}$ µA (4 mA max.)

Ripple Current Multipliers: **Ambient Temperature**

45 °C	55 °C	65 °C	75 °C	85 °C	95 °C	105 °C
1.73	1.58	1.41	1.22	1.00	0.71	0.57

Frequency

	50 Hz	60 Hz	120 Hz	360 Hz	1 kHz	5 kHz	10 kHz @ up
1⅜ and 2 inch diameter							
≤ 50 V	0.77	0.85	1.00	1.05	1.08	1.08	1.08
51–299 V	0.75	0.83	1.00	1.15	1.20	1.20	1.20
≥300 V	0.72	0.80	1.00	1.30	1.40	1.40	1.40
2½ and 3 inch diameter							
≤ 50 V	0.81	0.90	1.00	1.02	1.02	1.02	1.02
51–299 V	0.81	0.90	1.00	1.07	1.07	1.07	1.07
≥300 V	0.72	0.80	1.00	1.25	1.35	1.35	1.35

Load Life: 2,000 h at full load @ 105 °C

Shelf Life: 500 h @ 105 °C, Capacitance, ESR and DCL, initial requirements.

Vibration: 0 to 55 Hz, 0.06" and 10 g max, 1.5 h each of 2 axis

Type 550 105 °C High Ripple, Long-life, Inverter Grade, Aluminum

Outline Drawing

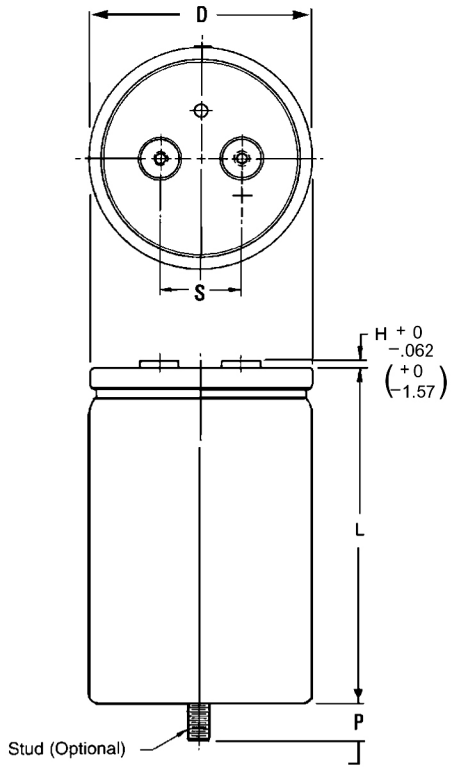

NOTE:With the stud-mount feature, a thermally-conductive disk can be inserted in the bottom flush with the outer insulating sleeve.This reduces the thermal resistance through the can bottom by 0.3 °C/W. Can Style P.

Stud Dimensions

Case Diam.	Stud Thread	P± 0.039" (±1.0 mm)
1.38	M8	0.470" (12.0)
1.75	M8	0.470" (12.0)
2.00	M12	0.630" (16.0)
2.50	M12	0.630" (16.0)
3.00	M12	0.630" (16.0)

Insulated Case Dimensions

For bare can subtract 0.024" (0.61 mm) from D and 0.03" (0.76 mm) from L

Case Code	Diameter (D) ±0.031 (in)	Diameter (D) ±0.78 (mm)	Length (L) ±0.062 (in)	Length (L) ±1.57 (mm)	Terminals (S) ±0.015 (in)	Terminals (S) ±0.38 (mm)	Typical Weight (oz)	Typical Weight (g)
AK	1.399	35.53	1.655	42.04	0.500	12.70	1.90	54
AA	1.399	35.53	2.155	54.74	0.500	12.70	2.00	57
AH	1.399	35.53	2.655	67.44	0.500	12.70	2.70	77
AB	1.399	35.53	3.155	80.14	0.500	12.70	3.30	94
AJ	1.399	35.53	3.655	92.84	0.500	12.70	3.80	108
AC	1.399	35.53	4.155	105.54	0.500	12.70	4.40	125
AD	1.399	35.53	4.655	118.24	0.500	12.70	5.10	145
AE	1.399	35.53	5.155	130.94	0.500	12.70	6.80	193
AF	1.399	35.53	5.655	143.64	0.500	12.70	8.10	230
BA	2.024	51.41	2.155	54.74	0.875	22.23	5.40	153
BH	2.024	51.41	2.655	67.44	0.875	22.23	6.10	173
BB	2.024	51.41	3.155	80.14	0.875	22.23	6.80	193
BJ	2.024	51.41	3.655	92.84	0.875	22.23	8.20	232
BC	2.024	51.41	1.155	29.34	0.875	22.23	9.50	269
BD	2.024	51.41	4.655	118.24	0.875	22.23	10.30	292
BE	2.024	51.41	5.155	130.94	0.875	22.23	10.70	303
BF	2.024	51.41	5.655	143.64	0.875	22.23	13.00	369
CB	2.524	64.11	3.155	80.14	1.125	28.58	10.40	295
CJ	2.524	64.11	3.655	92.84	1.125	28.58	12.73	361
CC	2.524	64.11	4.155	105.54	1.125	28.58	15.00	425
CD	2.524	64.11	4.655	118.24	1.125	28.58	17.20	488
CE	2.524	64.11	5.155	130.94	1.125	28.58	19.30	547
CF	2.524	64.11	5.655	143.64	1.125	28.58	21.40	607
DJ	3.024	76.81	3.655	92.84	1.250	31.75	20.00	567
DC	3.024	76.81	4.155	105.54	1.250	31.75	22.20	629
DD	3.024	76.81	4.655	118.24	1.250	31.75	25.50	723
DE	3.024	76.81	5.155	130.94	1.250	31.75	30.00	850
DF	3.024	76.81	5.655	143.64	1.250	31.75	31.90	904
DP	3.024	76.81	5.905	149.99	1.250	31.75	32.85	931
DG	3.024	76.81	8.655	219.84	1.250	31.75	43.30	1227

Terminal Style	Code	Post Diameter (in)	Post Diameter (mm)	H Maximum (in)	H Maximum (mm)	Thread	min Full Thread (in)	min Full Thread (mm)	For Case Diameters
Low Post	A	0.314	8.0	0.094	2.4	10-32	0.218	5.5	1⅜ to 3
High Post	B	0.314	8.0	0.281	7.1	10-32	0.375	9.5	1⅜ to 3
High Current, Low	D	0.684	17.4	0.125	3.2	¼-28	0.344	8.7	2½ & 3
High Current, High	E	0.684	17.4	0.281	7.1	¼-28	0.469	11.9	2½ & 3
Small M5 Post	M	0.314	8.0	0.281	7.1	M5	0.375	9.5	1⅜ & 2
M5 Post	F	0.512	13.0	0.23	5.8	M5	0.344	8.7	2½ & 3
M6 Low Post	G	0.684	17.4	0.125	3.2	M6	0.344	8.7	2½ & 3
M6 High Post	H	0.684	17.4	0.281	7.1	M6	0.469	11.9	2½ & 3

Click here to see Hardware & Mounting Options

Type 550 105 °C High Ripple, Long-life, Inverter Grade, Aluminum

Part Numbering System

550	542	T	450	DG	2	D	S
Type	**Capacitance**	**Tolerance**	**Voltage**	**Case Code**	**Insulation**	**Terminal**	**Can Style**
	542 = 5400 µF	M= ±20% U= 10%+75% T= –10%+50%	450 = 450 Vdc 016 = 16 Vdc 6R3 = 6.3 Vdc		0= None 1= Polyester 2= PVC	A= Low Post B= High Post D= High Current, Low Post E= High Current, High Post F= M5 Post M= M5 Post, small G= M6 Low Post H= M6 High Post	Blank= Standard Can S= Stud Bottom P= Stud with Thermal Pad

Standard insulation is 0.008-in PVC sleeve with 0.01-in polypropylene end disk.

Typical Performance Curves

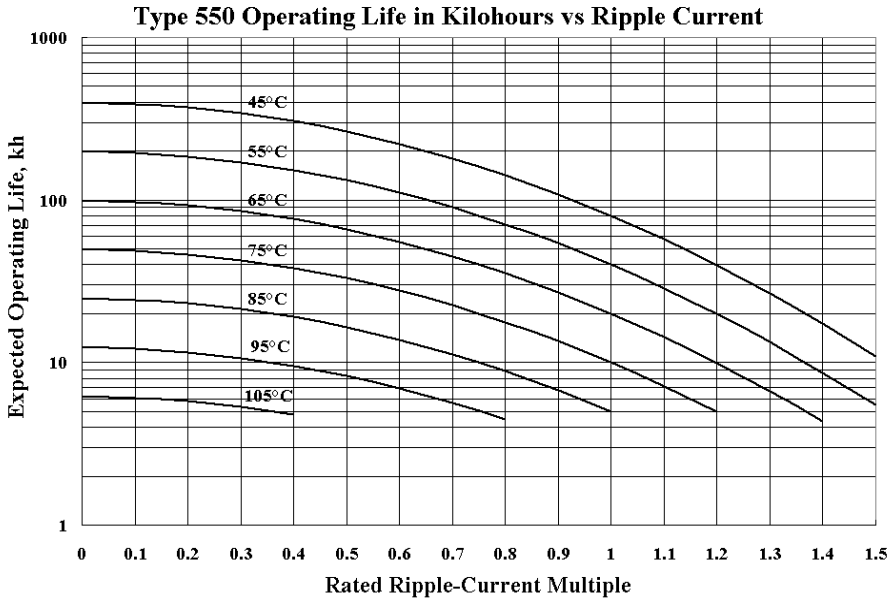

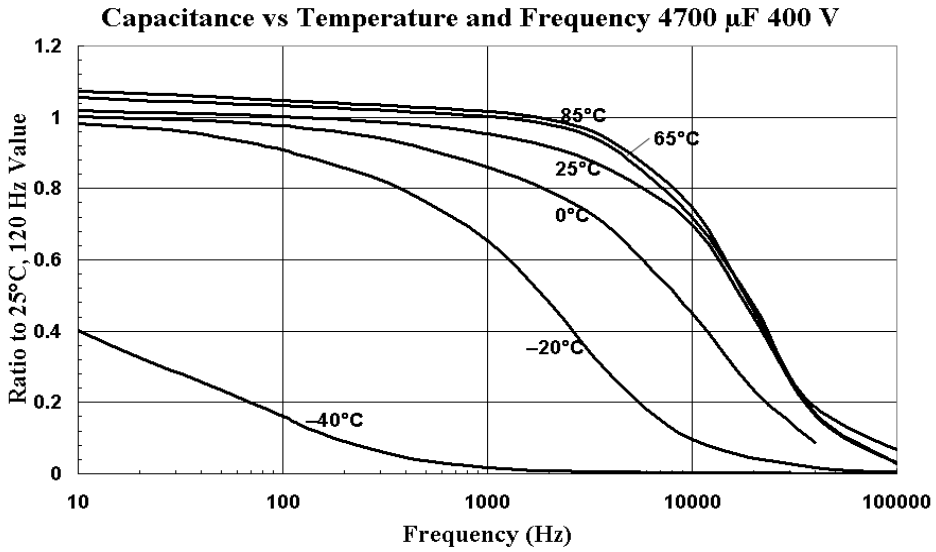

Typical Performance Curves

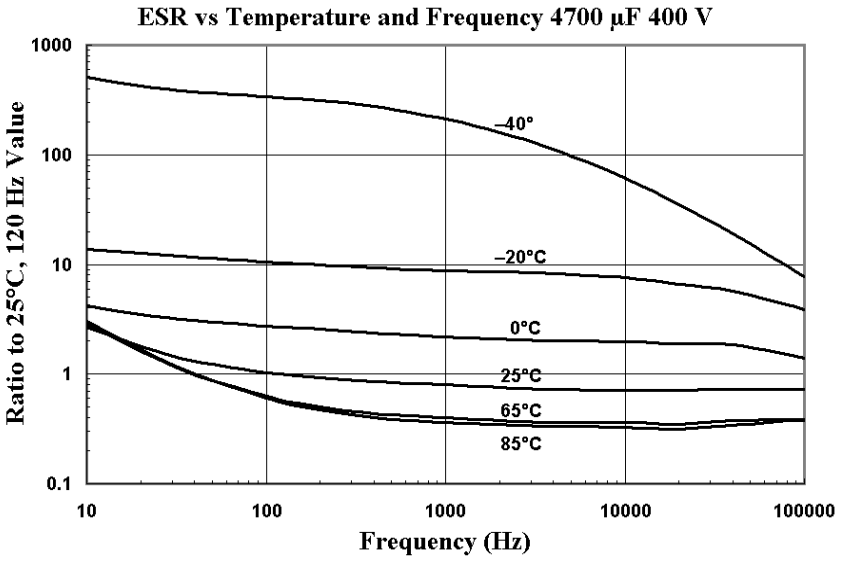

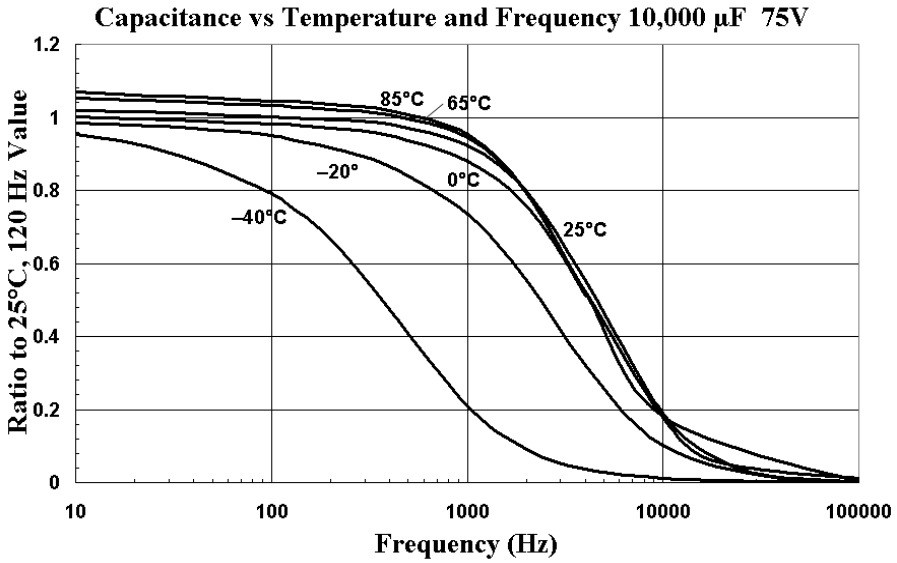

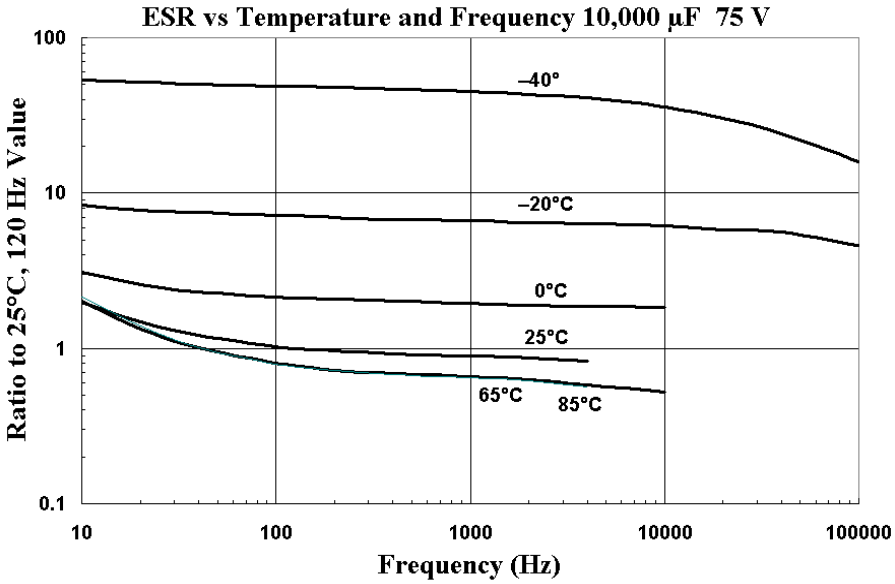

Type 550 105 °C High Ripple, Long-life, Inverter Grade, Aluminum

Typical Performance Curves

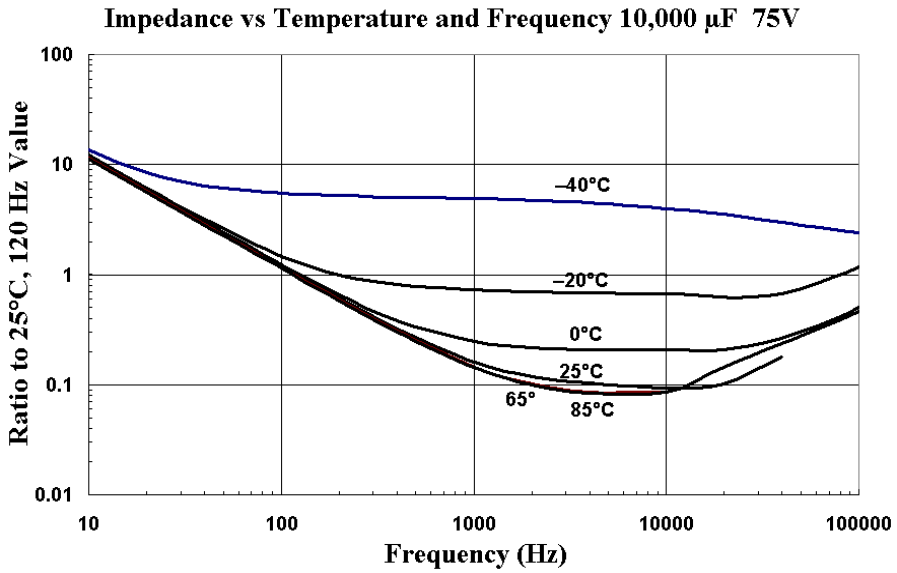

Ratings

Cap. (µF)	Catalog Part Number	ESR Max @ 25°C 120Hz (mΩ)	ESR Max @ 25°C 20kHz (mΩ)	Ripple Current Max @ 85°C 120Hz (A)	Ripple Current Max @ 85°C 20kHz (A)	Nominal Size D x L (in.)
6.3 Vdc (8 Vdc Surge)						
28,000	550283U6R3AK2B	49.5	33.5	5.0	6.0	1 ⅜ X 1 ⅝
47,000	550473U6R3AA2B	30.1	20.6	7.0	8.5	1 ⅜ X 2 ⅛
66,000	550663U6R3AH2B	21.9	15.1	8.9	10.7	1 ⅜ X 2 ⅝
85,000	550853U6R3AB2B	17.4	12.1	10.7	12.9	1 ⅜ X 3 ⅛
120,000	550124U6R3AC2B	12.7	9.0	14.1	16.7	1 ⅜ X 4 ⅛
170,000	550174U6R3BB2B	9.8	7.2	17.8	20.8	2 X 3 ⅛
180,000	550184U6R3AF2B	9.6	7.1	18.5	21.6	1 ⅜ X 5 ⅝
260,000	550264U6R3BC2B	6.9	5.2	23.6	27.3	2 X 4 ⅛
390,000	550394U6R3BF2D	5.1	3.9	30.8	35.1	2 X 5 ⅝
430,000	550434U6R3CC2D	4.6	3.5	33.2	37.8	2 ½ X 4 ⅛
610,000	550614U6R3DC2D	4.3	3.6	38.8	42.4	3 X 4 ⅛
640,000	550644U6R3CF2D	3.3	2.6	44.4	50.1	2 ½ X 5 ⅝
810,000	550814U6R3DE2D	3.4	2.9	46.8	50.0	3 X 5 ⅛
910,000	550914U6R3DF2D	3.1	2.6	50.0	50.0	3 X 5 ⅝
960,000	550964U6R3DP2D	3.0	2.5	50.0	50.0	3 X 5 ¾
1,500,000	550155U6R3DG2D	2.9	2.5	50.0	50.0	3 X 8 ⅝
16 Vdc (20 Vdc Surge)						
17,000	550173U016AK2B	56.6	33.5	4.6	6.0	1 ⅜ X 1 ⅝
29,000	550293U016AA2B	34.4	20.6	6.5	8.5	1 ⅜ X 2 ⅛
41,000	550413U016AH2B	25.0	15.1	8.3	10.7	1 ⅜ X 2 ⅝
52,000	550523U016AB2B	19.8	12.1	10.0	12.9	1 ⅜ X 3 ⅛
75,000	550753U016AC2B	14.4	9.0	13.3	16.7	1 ⅜ X 4 ⅛
110,000	550114U016AF2B	10.7	7.1	17.5	21.6	1 ⅜ X 5 ⅝
110,000	550114U016BB2B	11.0	7.2	16.8	20.8	2 X 3 ⅛
160,000	550164U016BC2B	7.7	5.2	22.3	27.3	2 X 4 ⅛
240,000	550244U016BF2B	5.6	3.9	29.3	35.1	2 X 5 ⅝
260,000	550264U016CC2D	5.1	3.5	31.6	37.8	2 ½ X 4 ⅛
380,000	550384U016DC2D	4.6	3.6	37.4	42.4	3 X 4 ⅛
390,000	550394U016CF2D	3.6	2.6	42.4	50.1	2 ½ X 5 ⅝
510,000	550514U016DE2D	3.6	2.9	45.2	50.0	3 X 5 ⅛
570,000	550574U016DF2D	3.3	2.6	49.0	50.0	3 X 5 ⅝
600,000	550604U016DP2D	3.2	2.5	50.0	50.0	3 X 5 ⅞
920,000	550924U016DG2D	3.1	2.5	50.0	50.0	3 X 8 ⅝
25 Vdc (30 Vdc Surge)						
9,900	550992U025AK2B	63.8	34.0	4.4	6.0	1 ⅜ X 1 ⅝
16,000	550163U025AA2B	38.7	20.8	6.2	8.4	1 ⅜ X 2 ⅛
23,000	550233U025AH2B	28.1	15.3	7.8	10.6	1 ⅜ X 2 ⅝
30,000	550303U025AB2B	22.2	12.3	9.5	12.8	1 ⅜ X 3 ⅛
43,000	550433U025AC2B	16.0	9.1	12.6	16.6	1 ⅜ X 4 ⅛
60,000	550603U025BB2B	12.2	7.3	16.0	20.7	2 X 3 ⅛
62,000	550623U025AF2B	11.8	7.1	16.7	21.5	1 ⅜ X 5 ⅝
90,000	550903U025BC2B	8.5	5.2	21.3	27.1	2 X 4 ⅛
140,000	550144U025BF2B	6.1	3.9	28.0	34.9	2 X 5 ⅝
150,000	550154U025CC2D	5.5	3.6	30.2	37.7	2 ½ X 4 ⅛
220,000	550224U025CF2D	3.9	2.6	40.7	49.9	2 ½ X 5 ⅝
220,000	550224U025DC2D	5.0	3.6	36.2	42.3	3 X 4 ⅛
290,000	550294U025DE2D	3.9	2.9	43.8	50.0	3 X 5 ⅛
320,000	550324U025DF2D	3.5	2.7	47.5	50.0	3 X 5 ⅝
340,000	550344U025DP2D	3.4	2.6	50.0	50.0	3 X 5 ⅞
520,000	550524U025DG2D	3.3	2.5	50.0	50.0	3 X 8 ⅝
50 Vdc (65 Vdc Surge)						
4,000	550402U050AK2B	85.2	34.6	3.8	5.9	1 ⅜ X 1 ⅝
6,700	550672U050AA2B	51.6	21.2	5.3	8.3	1 ⅜ X 2 ⅛
9,400	550942U050AH2B	37.2	15.5	6.8	10.5	1 ⅜ X 2 ⅝
12,000	550123U050AB2B	29.3	12.5	8.3	12.7	1 ⅜ X 3 ⅛

Type 550 105 °C High Ripple, Long-life, Inverter Grade, Aluminum

Cap. (µF)	Catalog Part Number	ESR Max @ 25°C 120Hz (mΩ)	ESR Max @ 25°C 20kHz (mΩ)	Ripple Current Max @ 85°C 120Hz (A)	Ripple Current Max @ 85°C 20kHz (A)	Nominal Size D x L (in.)
50 Vdc (65 Vdc Surge) (continued)						
17,000	550173U050AC2B	21.0	9.3	11.0	16.5	1 ⅜ X 4 ⅛
25,000	550253U050AF2B	15.2	7.2	14.7	21.3	1 ⅜ X 5 ⅝
25,000	550253U050BB2B	15.7	7.4	14.1	20.5	2 X 3 ⅛
37,000	550373U050BC2B	10.8	5.3	18.8	27.0	2 X 4 ⅛
55,000	550553U050BF2B	7.7	4.0	25.0	34.7	2 X 5 ⅝
61,000	550613U050CC2B	7.0	3.6	26.9	37.5	2 ½ X 4 ⅛
91,000	550913U050CF2D	4.9	2.6	36.5	49.7	2 ½ X 5 ⅝
91,000	550913U050DC2D	5.9	3.7	33.2	42.1	3 X 4 ⅛
120,000	550124U050DE2D	4.6	2.9	40.3	50.6	3 X 5 ⅛
140,000	550144U050DF2D	4.2	2.7	43.8	54.7	3 X 5 ⅝
140,000	550144U050DP2D	4.0	2.6	45.7	50.0	3 X 5 ⅞
220,000	550224U050DG2D	3.8	2.5	50.0	50.0	3 X 8 ⅝
75 Vdc (100 Vdc Surge)						
2,300	550232U075AK2B	114.0	74.0	3.3	4.6	1 ⅜ X 1 ⅝
3,800	550382U075AA2B	69.1	44.8	4.6	6.4	1 ⅜ X 2 ⅛
5,300	550532U075AH2B	49.8	32.4	5.9	8.1	1 ⅜ X 2 ⅝
6,900	550692U075AB2B	39.1	25.6	7.2	9.6	1 ⅜ X 3 ⅛
9,900	550992U075AC2B	27.7	18.4	9.5	12.0	1 ⅜ X 4 ⅛
14,000	550143U075BB2B	26.2	19.6	10.9	14.4	2 X 3 ⅛
15,000	550153U075AF2B	19.8	13.4	12.9	15.6	1 ⅜ X 5 ⅝
21,000	550213U075BC2B	18.0	13.6	14.6	18.8	2 X 4 ⅛
31,000	550313U075BF2B	12.7	9.8	19.5	22.2	2 X 5 ⅝
35,000	550353U075CC2B	12.2	8.8	20.3	25.3	2 ½ X 4 ⅛
52,000	550523U075CF2B	8.5	6.1	27.7	32.5	2 ½ X 5 ⅝
52,000	550523U075DC2B	11.2	9.4	24.1	28.3	3 X 4 ⅛
69,000	550693U075DE2B	8.6	7.2	29.5	33.7	3 X 5 ⅛
77,000	550773U075DF2D	7.7	6.5	32.1	36.7	3 X 5 ⅝
82,000	550823U075DP2D	7.4	6.3	33.6	38.3	3 X 5 ⅞
110,000	550114U075DG2D	9.8	6.1	34.4	45.6	3 X 8 ⅝
100 Vdc (125 Vdc Surge)						
1,400	550142U100AK2B	140.0	87.3	2.9	4.3	1 ⅜ X 1 ⅝
2,300	550232U100AA2B	84.4	52.8	4.2	6.0	1 ⅜ X 2 ⅛
3,200	550322U100AH2B	60.7	38.1	5.3	7.5	1 ⅜ X 2 ⅝
4,200	550422U100AB2B	47.6	30.0	6.5	8.9	1 ⅜ X 3 ⅛
6,000	550602U100AC2B	33.6	21.4	8.7	10.8	1 ⅜ X 4 ⅛
8,500	550852U100BB2B	29.7	21.0	10.3	14.2	2 X 3 ⅛
8,800	550882U100AF2B	26.2	15.5	11.2	14.5	1 ⅜ X 5 ⅝
13,000	550133U100BC2B	20.3	14.5	13.8	18.2	2 X 4 ⅛
19,000	550193U100BF2B	14.2	10.4	18.4	22.6	2 X 5 ⅝
21,000	550213U100CC2B	12.8	9.3	19.9	25.6	2 ½ X 4 ⅛
31,000	550313U100CF2B	8.8	6.5	27.1	31.6	2 ½ X 5 ⅝
31,000	550313U100DC2B	11.7	9.3	23.6	28.3	3 X 4 ⅛
42,000	550423U100DE2B	9.0	7.2	28.8	33.7	3 X 5 ⅛
47,000	550473U100DF2D	8.1	6.5	31.4	35.0	3 X 5 ⅝
49,000	550493U100DP2D	7.7	6.2	32.8	36.5	3 X 5 ⅞
68,000	550683U100DG2D	10.1	6.1	33.8	43.6	3 X 8 ⅝
200 Vdc - 250 Vdc Surge						
320	550321T200AK2B	295.0	189.0	2.8	4.2	1 ⅜ X 1 ⅝
520	550521T200AA2B	181.0	116.0	3.8	5.7	1 ⅜ X 2 ⅛
750	550751T200AH2B	125.0	80.8	4.9	7.3	1 ⅜ X 2 ⅝
980	550981T200AB2B	96.2	60.0	5.7	8.5	1 ⅜ X 3 ⅛
1,200	550122T200AC2B	78.3	48.9	7.1	10.4	1 ⅜ X 4 ⅛
1,400	550142T200AF2B	66.1	40.2	8.5	12.2	1 ⅜ X 5 ⅝
2,000	550202T200BB2B	51.2	32.6	9.9	14.0	2 X 3 ⅛
3,000	550302T200BC2B	33.7	21.6	12.6	17.6	2 X 4 ⅛
4,600	550462T200BF2B	22.6	14.6	15.4	21.1	2 X 5 ⅝
5,000	550502T200CC2B	21.2	13.8	18.3	24.6	2 ½ X 4 ⅛
7,500	550752T200DC2B	17.5	12.6	21.8	27.0	3 X 4 ⅛
7,600	550762T200CF2B	14.2	9.2	22.5	29.8	2 ½ X 5 ⅝
10,000	550103T200DE2B	13.3	9.2	25.5	31.3	3 X 5 ⅛
11,000	550113T200DF2B	11.8	8.3	27.0	33.0	3 X 5 ⅝
12,000	550123T200DP2B	11.2	8.1	27.4	33.4	3 X 5 ⅞
19,000	550193T200DG2B	13.0	11.0	25.1	27.0	3 X 8 ⅝
250 Vdc - 300 Vdc Surge						
260	550261T250AK2B	341.0	196.0	2.8	4.2	1 ⅜ X 1 ⅝
420	550421T250AA2B	209.0	120.0	3.6	5.6	1 ⅜ X 2 ⅛
610	550611T250AH2B	145.0	81.8	4.6	7.2	1 ⅜ X 2 ⅝
800	550801T250AB2B	104.0	60.7	5.5	8.4	1 ⅜ X 3 ⅛
990	550991T250AJ2B	84.7	52.6	6.3	9.7	1 ⅜ X 3 ⅝
1,200	550122T250AC2B	71.5	42.0	6.8	10.4	1 ⅜ X 4 ⅛
1,600	550162T250AE2B	54.8	32.5	8.2	15.3	1 ⅜ X 5 ⅛
1,700	550172T250AF2B	49.2	29.3	8.2	12.1	1 ⅜ X 5 ⅝
1,600	550162T250BB2B	56.8	33.0	9.3	13.8	2 X 3 ⅛
2,500	550252T250BC2B	36.1	21.8	11.9	17.4	2 X 4 ⅛
3,800	550382T250BF2B	24.1	14.8	14.5	21.0	2 X 5 ⅝
4,100	550412T250CC2B	24.2	14.0	14.5	20.9	2 ½ X 4 ⅛
6,200	550622T250CF2B	15.2	9.3	21.4	29.5	2 ½ X 5 ⅝
6,100	550612T250DC2B	19.8	12.7	21.0	26.9	3 X 4 ⅛
8,200	550822T250DE2B	14.0	9.3	24.5	31.1	3 X 5 ⅛
9,300	550932T250DF2B	12.0	8.4	25.9	32.8	3 X 5 ⅝

Type 550 105 °C High Ripple, Long-life, Inverter Grade, Aluminum

Cap. (µF)	Catalog Part Number	ESR Max @ 25°C 120Hz (mΩ)	ESR Max @ 25°C 20kHz (mΩ)	Ripple Current Max @ 85°C 120Hz (A)	Ripple Current Max @ 85°C 20kHz (A)	Nominal Size D x L (in.)
300 Vdc (350 Vdc Surge)						
190	550191T300AK2B	625.0	414.0	2.1	3.3	1 ⅜ X 1 ⅝
310	550311T300AA2B	382.0	253.0	2.9	4.5	1 ⅜ X 2 ⅛
440	550441T300AH2B	260.0	176.0	3.7	5.7	1 ⅜ X 2 ⅝
580	550581T300AB2B	190.0	135.0	4.4	6.7	1 ⅜ X 3 ⅛
720	550721T300AC2B	154.0	103.0	5.0	7.8	1 ⅜ X 4 ⅛
850	550851T300AF2B	130.0	87.0	5.5	8.5	1 ⅜ X 5 ⅝
1,200	550122T300BB2B	101.0	69.8	7.7	11.6	2 X 3 ⅛
1,800	550182T300BC2B	66.0	43.0	9.9	14.9	2 X 4 ⅛
2,700	550272T300BF2B	43.8	28.7	11.9	17.8	2 X 5 ⅝
3,000	550302T300CC2B	45.7	31.7	14.5	20.7	2 ½ X 4 ⅛
4,500	550452T300CF2B	30.1	20.2	18.0	25.4	2 ½ X 5 ⅝
4,400	550442T300DC2B	30.6	21.2	18.2	24.8	3 X 4 ⅛
5,900	550592T300DE2B	22.9	15.9	22.1	29.0	3 X 5 ⅛
6,700	550672T300DF2B	20.4	14.2	22.6	30.9	3 X 5 ⅝
7,100	550712T300DP2B	19.3	14.0	23.2	31.2	3 X 5 ⅞
11,000	550113T300DG2B	17.1	14.8	26.0	27.9	3 X 8 ⅝
350 Vdc (400 Vdc Surge)						
160	550161T350AK2B	678.0	425.0	1.9	3.1	1 ⅜ X 1 ⅝
270	550271T350AA2B	414.0	260.0	2.7	4.3	1 ⅜ X 2 ⅛
390	550391T350AH2B	288.0	181.0	3.6	5.4	1 ⅜ X 2 ⅝
510	550511T350AB2B	206.0	139.0	4.2	6.4	1 ⅜ X 3 ⅛
630	550631T350AC2B	167.0	106.0	4.8	7.7	1 ⅜ X 4 ⅛
750	550751T350AF2B	141.0	89.4	5.3	8.4	1 ⅜ X 5 ⅝
1,000	550102T350BB2B	109.0	71.5	7.2	11.1	2 X 3 ⅛
1,600	550162T350BC2B	71.2	44.0	9.0	13.9	2 X 4 ⅛
2,400	550242T350BF2B	47.2	29.4	11.3	17.6	2 X 5 ⅝
2,600	550262T350CC2B	48.9	32.4	13.6	20.7	2 ½ X 4 ⅛
4,000	550402T350CF2B	31.8	20.4	16.9	24.9	2 ½ X 5 ⅝
3,900	550392T350DC2B	32.7	21.6	17.3	24.5	3 X 4 ⅛
5,300	550532T350DE2B	24.2	16.1	21.5	28.8	3 X 5 ⅛
6,000	550602T350DF2B	21.6	14.4	22.0	30.7	3 X 5 ⅝
6,300	550632T350DP2B	20.5	14.2	22.5	31.0	3 X 5 ⅞
10,000	550103T350DG2B	17.7	14.8	25.6	27.9	3 X 8 ⅝

Cap. (µF)	Catalog Part Number	ESR Max @ 25°C 120Hz (mΩ)	ESR Max @ 25°C 20kHz (mΩ)	Ripple Current Max @ 85°C 120Hz (A)	Ripple Current Max @ 85°C 20kHz (A)	Nominal Size D x L (in.)
400 Vdc (450 Vdc Surge)						
130	550131T400AK2B	731.0	437.0	1.9	3.1	1 ⅜ X 1 ⅝
210	550211T400AA2B	447.0	267.0	2.6	4.2	1 ⅜ X 2 ⅛
310	550311T400AH2B	310.0	185.0	3.4	5.3	1 ⅜ X 2 ⅝
400	550401T400AB2B	223.0	142.0	4.0	6.3	1 ⅜ X 3 ⅛
500	550501T400AC2B	181.0	109.0	4.6	7.6	1 ⅜ X 4 ⅛
590	550591T400AF2B	152.0	91.7	5.1	8.3	1 ⅜ X 5 ⅝
810	550811T400BB2B	117.0	73.2	6.9	10.9	2 X 3 ⅛
1,200	550122T400BC2B	76.4	45.1	8.7	13.7	2 X 4 ⅛
1,900	550192T400BF2B	50.7	30.1	10.9	17.4	2 X 5 ⅝
2,100	550212T400CC2B	52.1	33.0	12.8	19.6	2 ½ X 4 ⅛
3,100	550312T400CF2B	34.2	21.0	16.0	24.3	2 ½ X 5 ⅝
3,100	550312T400DC2B	34.8	22.0	16.7	24.3	3 X 4 ⅛
4,100	550412T400DE2B	26.0	16.6	20.7	28.5	3 X 5 ⅛
4,700	550472T400DF2B	23.2	14.8	21.2	30.3	3 X 5 ⅝
4,900	550492T400DP2B	22.0	14.5	21.8	30.6	3 X 5 ⅞
7,700	550772T400DG2B	18.9	15.2	24.7	27.6	3 X 8 ⅝
450 Vdc (500 Vdc Surge)						
90	550900T450AK2B	941.0	553.0	1.1	1.6	1 ⅜ X 1 ⅝
150	550151T450AA2B	570.0	338.0	1.6	2.3	1 ⅜ X 2 ⅛
210	550211T450AH2B	399.0	234.0	2.1	3.0	1 ⅜ X 2 ⅝
280	550281T450AB2B	305.0	180.0	2.6	3.7	1 ⅜ X 3 ⅛
350	550351T450AC2B	247.0	146.0	3.2	4.6	1 ⅜ X 4 ⅛
410	550411T450AF2B	208.0	123.0	4.0	5.7	1 ⅜ X 5 ⅝
560	550561T450BB2B	157.0	95.1	4.5	6.0	2 X 3 ⅛
870	550871T450BC2B	103.0	62.3	6.1	8.3	2 X 4 ⅛
1,300	550132T450BF2B	68.0	41.4	8.4	11.4	2 X 5 ⅝
1,400	550142T450CC2B	67.8	43.1	8.6	11.4	2 ½ X 4 ⅛
2,200	550222T450CF2B	45.0	28.8	12.0	15.8	2 ½ X 5 ⅝
2,100	550212T450DC2B	52.1	35.6	11.2	14.2	3 X 4 ⅛
2,900	550292T450DE2B	39.0	26.8	13.8	17.6	3 X 5 ⅛
3,200	550322T450DF2B	34.7	23.9	15.2	19.3	3 X 5 ⅝
3,400	550342T450DP2B	32.9	22.7	15.6	19.8	3 X 5 ⅞
5,400	550542T450DG2B	21.7	15.2	23.1	29.1	3 X 8 ⅝

Notice and Disclaimer: All product drawings, descriptions, specifications, statements, information and data (collectively, the "Information") in this datasheet or other publication are subject to change. The customer is responsible for checking, confirming and verifying the extent to which the Information contained in this datasheet or other publication is applicable to an order at the time the order is placed. All Information given herein is believed to be accurate and reliable, but it is presented without any guarantee, warranty, representation or responsibility of any kind, expressed or implied. Statements of suitability for certain applications are based on the knowledge that the Cornell Dubilier company providing such statements ("Cornell Dubilier") has of operating conditions that such Cornell Dubilier company regards as typical for such applications, but are not intended to constitute any guarantee, warranty or representation regarding any such matter – and Cornell Dubilier specifically and expressly disclaims any guarantee, warranty or representation concerning the suitability for a specific customer application, use, storage, transportation, or operating environment. The Information is intended for use only by customers who have the requisite experience and capability to determine the correct products for their application. Any technical advice inferred from this Information or otherwise provided by Cornell Dubilier with reference to the use of any Cornell Dubilier products is given gratis (unless otherwise specified by Cornell Dubilier), and Cornell Dubilier assumes no obligation or liability for the advice given or results obtained. Although Cornell Dubilier strives to apply the most stringent quality and safety standards regarding the design and manufacturing of its products, in light of the current state of the art, isolated component failures may still occur. Accordingly, customer applications which require a high degree of reliability or safety should employ suitable designs or other safeguards (such as installation of protective circuitry or redundancies or other appropriate protective measures) in order to ensure that the failure of an electrical component does not result in a risk of personal injury or property damage. Although all product-related warnings, cautions and notes must be observed, the customer should not assume that all safety measures are indicated in such warnings, cautions and notes, or that other safety measures may not be required.

click here to see hardware and mounting options

Type 550C 105 °C High Ripple, Inverter Grade, Aluminum

Ultra-Ripple, Long Life Screw Terminal Type

Type 550C is the standard for motor drive and other high-ripple, long-life applications. It boasts more than 25% extra ripple capability per can size, but less capacitance than Type 520C. Expected operating life is more than 100,000 hours in typical applications. Type 550C is rated for 20,000 h life with full ripple current, rated voltage, 85 °C and 100 lfm airflow while mounted horizontally. Horizontal mounting is more severe than vertical mounting. The extended cathode foil of the 550C assures heat flow from the capacitor element to the can in all orientations.

Highlights

- Load life up to 20,000 hours at 85 °C
- High ripple current
- ESRs to 7 mΩ

Specifications

Temperature Range	–40 °C to +105 °C
Rated Voltage Range	200 Vdc to 500 Vdc
Capacitance Range	680 µF to 35,000 µF
Capacitance Tolerance	–10% +50%
Leakage Current	≤3 $\sqrt{CV}$ µA, 4 mA max, 5 minutes
Ripple Current Multipliers	Ambient Temperature

45 °C	55 °C	65 °C	75 °C	85 °C	95 °C	105 °C
1.66	1.52	1.37	1.20	1.00	0.75	0.36

Frequency	50 Hz	60 Hz	120 Hz	360 Hz	1 kHz	5 kHz	10 kHz & up
1 3/8" & 2 1/2" Diameters							
200 to 350 V	0.77	0.82	1.00	1.21	1.32	1.37	1.38
400 to 500 V	0.73	0.78	1.00	1.33	1.53	1.66	1.68
3" & 3 1/2" Diameters							
200 to 350 V	0.80	0.85	1.00	1.17	1.24	1.28	1.29
400 to 500 V	0.73	0.79	1.00	1.31	1.51	1.63	1.65

Low Temperature Characteristics	Impedance ratio: $Z_{-20°C}/Z_{+25°C}$ ≤ 3 (200–500 Vdc)
Endurance Life Test	5,000 hr. load life at 85 °C 10,000 hr. load life at 105 °C Δ Capacitance ±20% ESR 200% of limit DCL 100% of limit
Operating Life	

Diameter	Rated Voltage and Ripple Current @105 °C (hours)	Rated Voltage @105 °C (hours)
2½" (66)	15000	18000
3" (77)	15000	18000
3½ (90)	15000	18000

Load life up to 20000 hours at 105 °C with 90% VDC

Shelf Life Test	500 h at 105 °C Capacitance 100% of limit ESR 100% of limit DCL 100% of limit
Vibration	10 to 55 Hz, 0.06" and 10 g max, 1.5 h each of two axis
RoHS Compliant	

Type 550C 105 °C High Ripple, Inverter Grade, Aluminum

Ultra-Ripple, Long Life Screw Terminal Type

Part Numbering System

550C	812	T	450	FG	2	D	S
Type	**Capacitance**	**Tolerance**	**Voltage**	**Case Code**	**Insulation**	**Terminal**	**Can Style**
	812 =8100 µF	**M** = ±20% **U** = –10%+75% **T** = –10%+50%	**200** = 200 Vdc		**0**= None **1**= Polyester **2**= PVC	**A** = Low Post **B** = High Post **D** = High Current, Low Post **E** = High Current, High Post **F** = M5 Post M = M5 Post, Small **G** = M6 Low Post **H** = M6 High Post	**Blank**= Standard Can **S**= Stud Bottom **P**= Stud with Thermal Pad

Standard insulation is 0.008-in PVC sleeve with 0.01-in polypropylene end disk.
Polyester insulation is not available for 3.5 inch diameter units.

Outline Drawing

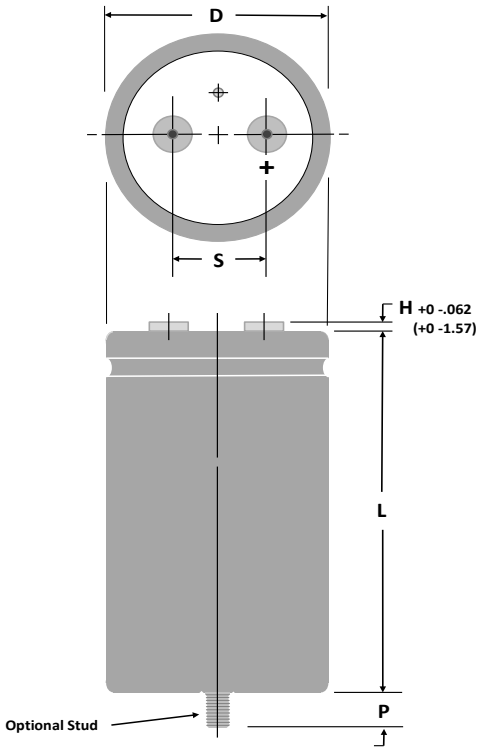

Stud Dimensions

Case Diam.	Stud Thread	P± 0.039" (±1.0 mm)
1.375	M8	0.470" (12.0)
1.750	M8	0.470" (12.0)
2.000	M12	0.630" (16.0)
2.500	M12	0.630" (16.0)
3.000	M12	0.630" (16.0)
3.500	M12	0.630" (16.0)

NOTE: With the stud-mount feature, a thermally-conductive disk can be inserted in the bottom flush with the outer insulating sleeve. This reduces the thermal resistance through the can bottom by 0.3 °C/W. Can Style P.

Terminal Dimensions

Terminal Style	For Case Diameters	Code	Post Diameter in	Post Diameter mm	H max in	H max mm	Thread	min Full Thread in	min Full Thread mm	Torque in·lb	Torque N·m
Low Post	1⅜ to 3	A	0.314	8.0	0.094	2.4	10–32	0.218	5.5	25	2.82
High Post	1⅜ to 3	B	0.314	8.0	0.281	7.1	10–32	0.375	9.5	25	2.82
High Current, Low	2½ to 3½	D	0.684	17.4	0.125	3.2	¼–28	0.344	8.7	50	5.65
High Current, High	2½ to 3½	E	0.684	17.4	0.281	7.1	¼–28	0.469	11.9	60	6.78
M5 Post, Small	1⅜ to 2	M	0.314	8.0	0.281	7.1	M5	0.375	9.5	25	2.82
M5 Post	2½ & 3	F	0.512	13.0	0.230	5.8	M5	0.344	8.7	25	2.82
M6 Low Post	2½ to 3½	G	0.684	17.4	0.125	3.2	M6	0.344	8.7	50	5.65
M6 High Post	2½ to 3½	H	0.684	17.4	0.281	7.1	M6	0.469	11.9	60	6.78

NOTE: Only high post and M5 post terminals are available at 550 Vdc as they meet the required creepage distance.

Type 550C 105 °C High Ripple, Inverter Grade, Aluminum

Ultra-Ripple, Long Life Screw Terminal Type

Uninsulated Case Dimensions

For insulated case, add 0.024"(0.610 mm) to "D"and 0.030"(0.762 mm) to length.

	Diam. (D)		Length (L)		Terminals (S)		Typical Weight	
Case Code	±.031 Inches	±.78 mm	±.062 Inches	±1.57 mm	±0.015 Inches	±.38 mm	oz	g
AK	1.375	34.93	1.625	41.28	0.50	12.70	1.9	54
AA	1.375	34.93	2.125	53.98	0.50	12.70	2.0	57
AH	1.375	34.93	2.625	66.68	0.50	12.70	2.7	77
AB	1.375	34.93	3.125	79.38	0.50	12.70	3.3	94
AJ	1.375	34.93	3.625	92.08	0.50	12.70	3.8	108
AC	1.375	34.93	4.125	104.78	0.50	12.70	4.4	125
AD	1.375	34.93	4.625	117.48	0.50	12.70	5.1	145
AE	1.375	34.93	5.125	130.18	0.50	12.70	6.8	193
AF	1.375	34.93	5.625	142.88	0.50	12.70	8.1	230
EA	1.750	44.45	2.125	53.98	0.75	19.05	2.7	76
EH	1.750	44.45	2.625	66.68	0.75	19.05	3.8	108
EB	1.750	44.45	3.125	79.38	0.75	19.05	5.1	145
EJ	1.750	44.45	3.625	92.08	0.75	19.05	6.8	193
EC	1.750	44.45	4.125	104.78	0.75	19.05	8.1	230
ED	1.750	44.45	4.625	117.48	0.75	19.05	9.0	255
EE	1.750	44.45	5.125	130.18	0.75	19.05	9.5	269
EF	1.750	44.45	5.625	142.88	0.75	19.05	10.5	298
BA	2.000	50.80	2.125	53.98	0.88	22.23	5.4	153
BH	2.000	50.80	2.625	66.68	0.88	22.23	6.1	173
BB	2.000	50.80	3.125	79.38	0.88	22.23	6.8	193
BJ	2.000	50.80	3.625	92.08	0.88	22.23	8.2	232
BC	2.000	50.80	4.125	104.78	0.88	22.23	9.5	269
BD	2.000	50.80	4.625	117.48	0.88	22.23	10.3	292
BE	2.000	50.80	5.125	130.18	0.88	22.23	10.7	303
BF	2.000	50.80	5.625	142.88	0.88	22.23	13.0	369
CH	2.500	63.50	2.625	66.68	1.13	28.58	9.2	261
CB	2.500	63.50	3.125	79.38	1.13	28.58	10.4	295
CJ	2.500	63.50	3.625	92.08	1.13	28.58	12.7	361
CC	2.500	63.50	4.125	104.78	1.13	28.58	15.0	425
CD	2.500	63.50	4.625	117.48	1.13	28.58	17.2	488
CE	2.500	63.50	5.125	130.18	1.13	28.58	19.3	547
CF	2.500	63.50	5.625	142.88	1.13	28.58	21.4	607
DB	3.000	76.20	3.125	79.38	1.25	31.75	16.7	473
DJ	3.000	76.20	3.625	92.08	1.25	31.75	20.0	567
DC	3.000	76.20	4.125	104.78	1.25	31.75	22.2	629
DD	3.000	76.20	4.625	117.48	1.25	31.75	25.5	723
DE	3.000	76.20	5.125	130.18	1.25	31.75	30.0	850
DF	3.000	76.20	5.625	142.88	1.25	31.75	31.9	904
DM	3.000	76.20	6.625	168.28	1.25	31.75	34.4	933.5
DP	3.000	76.20	5.875	149.23	1.25	31.75	32.8	931
DN	3.000	76.20	7.625	193.68	1.25	31.75	39.5	1119
DG	3.000	76.20	8.625	219.08	1.25	31.75	43.3	1227
FC	3.500	88.90	4.125	104.78	1.25	31.75	30.0	850
FD	3.500	88.90	4.625	117.48	1.25	31.75	34.4	976
FE	3.500	88.90	5.125	130.18	1.25	31.75	40.5	1148
FF	3.500	88.90	5.625	142.88	1.25	31.75	43.1	1221
FP	3.500	88.90	5.875	149.23	1.25	31.75	44.3	1257
FN	3.500	88.90	7.625	193.68	1.25	31.75	53.3	1512
FG	3.500	88.90	8.625	219.08	1.25	31.75	58.5	1658
FM	3.500	88.90	6.625	168.28	1.25	31.75	46.4	1315.4

Type 550C 105 °C High Ripple, Inverter Grade, Aluminum

Ultra-Ripple, Long Life Screw Terminal Type

Ratings

MFD	CATALOG NO.	ESR MAX. @ 25°C 120 Hz (mOhms)	Ripple Current Max @85°C 120 Hz (A)	Ripple Current Max @ 105°C 120 Hz (A)	CASE SIZE DIA X LENGTH
200 VDC (250 VDC SURGE)					
2800	550C282T200CH2B	45.4	10.5	3.8	2 1/2 X 2 5/8
4000	550C402T200CB2B	32.6	13.2	4.7	2 1/2 X 3 1/8
5100	550C512T200CJ2B	25.5	15.6	5.6	2 1/2 X 3 5/8
6200	550C622T200CC2B	20.6	18.1	6.5	2 1/2 X 4 1/8
7300	550C732T200CD2B	17.6	20.3	7.3	2 1/2 X 4 5/8
7300	550C732T200DJ2B	21.2	19.1	6.9	3 X 3 5/8
8500	550C852T200CE2B	15.5	22.5	8.1	2 1/2 X 5 1/8
9000	550C902T200DC2B	17.6	21.9	7.9	3 X 4 1/8
9600	550C962T200CF2B	13.8	24.5	8.8	2 1/2 X 5 5/8
11000	550C113T200DD2B	15.1	24.5	8.8	3 X 4 5/8
12000	550C123T200DE2B	13.3	27.0	9.7	3 X 5 1/8
13000	550C133T200FC2D	18.0	23.8	8.6	3 1/2 X 4 1/8
14000	550C143T200DF2B	11.9	29.4	10.6	3 X 5 5/8
15000	550C153T200DP2D	11.4	30.6	11.0	3 X 5 7/8
16000	550C163T200FD2D	15.3	26.8	9.6	3 1/2 X 4 5/8
18000	550C183T200FE2D	13.6	29.4	10.6	3 1/2 X 5 1/8
20000	550C203T200FF2D	12.2	31.9	11.5	3 1/2 X 5 5/8
21000	550C213T200DN2D	9.5	36.8	13.2	3 X 7 5/8
22000	550C223T200FP2D	11.6	33.2	11.9	3 1/2 X 5 7/8
24000	550C243T200DG2D	8.2	40.4	14.6	3 X 8 5/8
30000	550C303T200FN2D	9.3	40.6	14.6	3 1/2 X 7 5/8
35000	550C353T200FG2D	7.9	44.9	16.2	3 1/2 X 8 5/8
250 VDC (300 VDC SURGE)					
2100	550C212T250CH2B	58.6	9.3	3.3	2 1/2 X 2 5/8
4200	550C422T250DB2B	33.5	14.5	5.2	2 1/2 X 3 1/8
4600	550C462T250CC2B	27.1	15.8	5.7	2 1/2 X 4 1/8
5400	550C542T250CD2B	23.1	17.8	6.4	2 1/2 X 4 5/8
5400	550C542T250DJ2B	25.9	17.3	6.2	3 X 3 5/8
6200	550C622T250CE2B	19.8	19.9	7.2	2 1/2 X 5 1/8
6600	550C662T250DC2B	21.5	19.9	7.1	3 X 4 1/8
7100	550C712T250CF2B	17.6	21.7	7.8	2 1/2 X 5 5/8
7800	550C782T250DD2B	18.3	22.3	8.0	3 X 4 5/8
9000	550C902T250DE2B	16.1	24.6	8.9	3 X 5 1/8
9700	550C973T250FC2D	19.1	23.1	8.3	3 1/2 X 4 1/8
10000	550C103T250DF2B	14.4	26.8	9.6	3 X 5 5/8
11000	550C113T250DP2B	13.2	28.2	10.2	3 X 5 7/8
11000	550C113T250FD2D	16.6	25.8	9.3	3 1/2 X 4 5/8
13000	550C133T250FE2D	14.5	28.4	10.2	3 1/2 X 5 1/8

MFD	CATALOG NO.	ESR MAX. @ 25°C 120 Hz (mOhms)	Ripple Current Max @85°C 120 Hz (A)	Ripple Current Max @ 105°C 120 Hz (A)	CASE SIZE DIA X LENGTH
250 VDC (300 VDS SURGE)					
15000	550C153T250DN2D	10.9	34.4	12.4	3 X 7 5/8
15000	550C153T250FF2D	12.8	31.2	11.2	3 1/2 X 5 5/8
16000	550C163T250FP2D	12.2	32.3	11.6	3 1/2 X 5 7/8
17000	550C173T250DG2D	9.2	38.3	13.8	3 X 8 5/8
22000	550C223T250FN2D	9.9	39.5	14.2	3 1/2 X 7 5/8
25000	550C253T250FG2D	8.4	43.7	15.7	3 1/2 X 8 5/8
300 VDC (350 VDC SURGE)					
1600	550C162T300CH2B	90.7	7.4	2.7	2 1/2 X 2 5/8
2200	550C222T300CB2B	65.1	9.3	3.4	2 1/2 X 3 1/8
2800	550C282T300CJ2B	50.8	11.1	4.0	2 1/2 X 3 5/8
3400	550C342T300DB2B	43.7	12.7	4.6	3 X 3 1/8
3500	550C352T300CC2B	41.6	12.8	4.6	2 1/2 X 4 1/8
4100	550C412T300CD2B	35.5	14.4	5.2	2 1/2 X 4 5/8
4400	550C442T300DJ2B	34.2	15.1	5.4	3 X 3 5/8
4700	550C472T300CE2B	31.0	15.9	5.7	2 1/2 X 5 1/8
5300	550C532T300CF2B	27.1	17.5	6.3	2 1/2 X 5 5/8
5400	550C542T300DC2B	28.3	17.3	6.2	3 X 4 1/8
6400	550C642T300DD2B	24.1	19.4	7.0	3 X 4 5/8
7200	550C722T300FC2D	21.8	21.7	7.8	3 1/2 X 4 1/8
7400	550C742T300DE2B	21.1	21.5	7.7	3 X 5 1/8
8300	550C832T300DF2B	18.8	23.4	8.4	3 X 5 5/8
8600	550C862T300FD2D	18.6	24.3	8.8	3 1/2 X 4 5/8
8800	550C882T300DP2B	17.9	24.3	8.8	3 X 5 7/8
9900	550C993T300FE2D	16.2	26.8	9.7	3 1/2 X 5 1/8
11000	550C113T300FF2D	14.0	29.6	10.7	3 1/2 X 5 5/8
12000	550C123T300FP2D	13.3	30.8	11.1	3 1/2 X 5 7/8
12000	550C123T300DN2B	14.4	30.0	10.8	3 X 7 5/8
14000	550C143T300DG2D	12.2	33.3	12.0	3 X 8 5/8
16000	550C163T300FN2D	10.7	38.1	13.7	3 1/2 X 7 5/8
18000	550C183T300FG2D	8.9	42.3	15.2	3 1/2 X 8 5/8
350 VDC (400 VDC SURGE)					
1300	550C132T350CH2B	100.6	7.1	2.5	2 1/2 X 2 5/8
1800	550C182T350CB2B	72.0	8.8	3.2	2 1/2 X 3 1/8
2300	550C232T350CJ2B	56.3	10.5	3.8	2 1/2 X 3 5/8
2800	550C282T350CC2B	46.4	12.1	4.4	2 1/2 X 4 1/8
2800	550C282T350DB2B	47.8	12.2	4.4	3 X 3 1/8
3300	550C332T350CD2B	39.4	13.6	4.9	2 1/2 X 4 5/8
3600	550C362T350DJ2B	37.4	14.5	5.2	3 X 3 5/8

Type 550C 105 °C High Ripple, Inverter Grade, Aluminum

Ultra-Ripple, Long Life Screw Terminal Type

MFD	CATALOG NO.	ESR MAX. @ 25°C 120 Hz (mOhms)	Ripple Current Max @85°C 120 Hz (A)	Ripple Current Max @ 105°C 120 Hz (A)	CASE SIZE DIA X LENGTH
350 VDC (400 VDC SURGE)					
3800	550C382T350CE2B	34.5	15.1	5.4	2 1/2 X 5 1/8
4300	550C432T350CF2B	29.9	16.7	6.0	2 1/2 X 5 5/8
4400	550C442T350DC2B	30.9	16.6	6.0	3 X 4 1/8
5100	550C512T350DD2B	26.3	18.6	6.7	3 X 4 5/8
5800	550C582T350FC2D	23.8	20.8	7.5	3 1/2 X 4 1/8
5900	550C592T350DE2B	23.0	20.6	7.4	3 X 5 1/8
6700	550C672T350DF2B	20.5	22.4	8.1	3 X 5 5/8
6900	550C692T350FD2D	20.3	23.3	8.4	3 1/2 X 4 5/8
7100	550C712T350DP2B	19.5	23.3	8.4	3 X 5 7/8
8000	550C802T350FE2D	17.7	25.7	9.3	3 1/2 X 5 1/8
9000	550C902T350FF2D	15.3	28.4	10.2	3 1/2 X 5 5/8
9500	550C952T350FP2D	14.5	29.6	10.6	3 1/2 X 5 7/8
9600	550C962T350DN2B	15.4	29.0	10.4	3 X 7 5/8
11000	550C113T350DG2D	12.9	32.3	11.6	3 X 8 5/8
13000	550C133T350FN2D	11.5	36.6	13.2	3 1/2 X 7 5/8
15000	550C153T350FG2D	9.6	40.7	14.6	3 1/2 X 8 5/8
400 VDC (450 VDC SURGE)					
990	550C991T400CH2B	110.4	6.7	2.4	2 1/2 X 2 5/8
1400	550C142T400CB2B	79.1	8.4	3.0	2 1/2 X 3 1/8
1800	550C182T400CJ2B	61.7	10.0	3.6	2 1/2 X 3 5/8
2200	550C222T400CC2B	50.8	11.6	4.2	2 1/2 X 4 1/8
2200	550C222T400DB2B	53.0	11.6	4.2	3 X 3 1/8
2600	550C262T400CD2B	43.3	13.0	4.7	2 1/2 X 4 5/8
2800	550C282T400DJ2B	41.4	13.7	4.9	3 X 3 5/8
3000	550C302T400CE2B	37.7	14.4	5.2	2 1/2 X 5 1/8
3400	550C342T400CF2B	33.5	15.8	5.7	2 1/2 X 5 5/8
3400	550C342T400DC2B	34.0	15.8	5.7	3 X 4 1/8
4000	550C402T400DD2B	29.0	17.7	6.4	3 X 4 5/8
4600	550C462T4000FC2D	25.8	20.0	7.2	3 1/2 X 4 1/8
4700	550C472T400DE2B	24.8	19.8	7.1	3 X 5 1/8
5300	550C532T400DF2B	22.0	21.6	7.8	3 X 5 5/8
5400	550C542T400FD2D	21.9	22.4	8.1	3 1/2 X 4 5/8
5600	550C562T400DP2B	21.0	22.4	8.1	3 X 5 7/8
6200	550C622T400FE2D	19.1	24.7	8.9	3 1/2 X 5 1/8
7100	550C712T400FF2D	16.0	27.3	9.8	3 1/2 X 5 5/8
7500	550C752T400FP2D	15.7	28.4	10.2	3 1/2 X 5 7/8
7800	550C782T400DN2B	16.9	27.6	9.9	3 X 7 5/8
9000	550C902T400DG2D	14.4	30.6	11.0	3 X 8 5/8
9700	550C972T400FN2D	12.6	34.9	12.6	3 1/2 X 7 5/8
11000	550C113T400FG2D	10.7	38.7	13.9	3 1/2 X 8 5/8
450 VDC (500 VDC SURGE)					
700	550C701T450CH2B	125.3	6.3	2.3	2 1/2 X 2 5/8
980	550C981T450CB2B	89.7	7.9	2.9	2 1/2 X 3 1/8
1300	550C132T450CJ2B	66.5	9.7	3.5	2 1/2 X 3 5/8

MFD	CATALOG NO.	ESR MAX. @ 25°C 120 Hz (mOhms)	Ripple Current Max @85°C 120 Hz (A)	Ripple Current Max @ 105°C 120 Hz (A)	CASE SIZE DIA X LENGTH
450 VDC (500 VDC SURGE)					
1500	550C152T450CC2B	57.5	10.9	3.9	2 1/2 X 4 1/8
1500	550C152T450DB2B	55.0	11.3	4.1	3 X 3 1/8
1800	550C182T450CD2B	49.0	12.2	4.4	2 1/2 X 4 5/8
2000	550C202T450DJ2B	42.9	13.5	4.8	3 X 3 5/8
2100	550C212T450CE2B	40.5	13.9	5.0	2 1/2 X 5 1/8
2400	550C242T450CF2B	35.4	15.3	5.5	2 1/2 X 5 5/8
2400	550C242T450DC2B	35.5	15.5	5.6	3 X 4 1/8
2900	550C292T450DD2B	30.3	17.4	6.3	3 X 4 5/8
3200	550C322T450FC2D	26.6	19.6	7.1	3 1/2 X 4 1/8
3300	550C332T450DE2B	26.3	19.2	6.9	3 X 5 1/8
3700	550C372T450DF2B	23.4	20.9	7.5	3 X 5 5/8
3800	550C382T450FD2D	22.6	22.1	7.9	3 1/2 X 4 5/8
4000	550C402T450DP2B	22.3	21.8	7.8	3 X 5 7/8
4400	550C442T450FE2D	19.7	24.3	8.8	3 1/2 X 5 1/8
5000	550C502T450FF2D	17.5	26.5	9.6	3 1/2 X 5 5/8
5300	550C532T450FP2D	16.6	27.6	9.9	3 1/2 X 5 7/8
5500	550C552T450DN2B	18.0	26.8	9.6	3 X 7 5/8
6400	550C642T450DG2D	15.2	29.8	10.7	3 X 8 5/8
7100	550C712T450FN2D	13.1	34.3	12.3	3 1/2 X 7 5/8
8100	550C813T450FG2D	11.0	38.2	13.7	3 1/2 X 8 5/8
500 VDC (550 VDC SURGE)					
680	550C681T500CH2B	228.5	4.7	1.7	2 1/2 X 2 5/8
680	550C961T500CB2B	163.6	5.9	2.1	2 1/2 X 3 1/8
1200	550C122T500CJ2B	126.4	7.0	2.5	2 1/2 X 3 5/8
1400	550C142T500DB2B	100.0	8.4	3.0	3 X 3 1/8
1500	550C152T500CC2B	98.9	8.3	3.0	2 1/2 X 4 1/8
1800	550C182T500CD2B	84.0	9.3	3.4	2 1/2 X 4 5/8
1900	550C192T500DJ2B	76.6	10.1	3.6	3 X 3 5/8
2000	550C202T500CE2B	77.0	10.1	3.6	2 1/2 X 5 1/8
2300	550C232T500DC2B	62.5	11.6	4.2	3 X 4 1/8
2300	550C232T500CF2B	64.6	11.4	4.1	2 1/2 X 5 5/8
2700	550C272T500DD2B	52.4	13.2	4.7	3 X 4 5/8
3100	550C312T450DE2B	45.1	14.7	5.3	3 X 5 1/8
3200	550C322T500FC2D	45.0	15.1	5.4	3 1/2 X 4 1/8
3500	550C352T500DF2B	40.0	16.1	5.8	3 X 5 5/8
3700	550C372T500DP2B	37.6	16.8	6.0	3 X 5 7/8
3800	550C382T500FD2D	37.5	17.1	6.2	3 1/2 X 4 5/8
4300	550C432T500FE2D	32.9	18.8	6.8	3 1/2 X 5 1/8
4900	550C492T500FF2D	28.2	20.9	7.5	3 1/2 X 5 5/8
5200	550C522T500FP2D	26.7	21.8	7.9	3 1/2 X 5 7/8
5400	550C542T500DN2B	30.3	20.9	7.5	3 X 7 5/8
6000	550C602T500DG2B	22.9	24.2	8.7	3 X 8 5/8
7000	550C702T500FN2D	19.7	27.9	10.1	3 1/2 X 7 5/8
8400	550C843T500FG2D	16.6	31.0	11.2	3 1/2 X 8 5/8

Type 550C 105 °C High Ripple, Inverter Grade, Aluminum

Ultra-Ripple, Long Life Screw Terminal Type

Typical Performance Curves

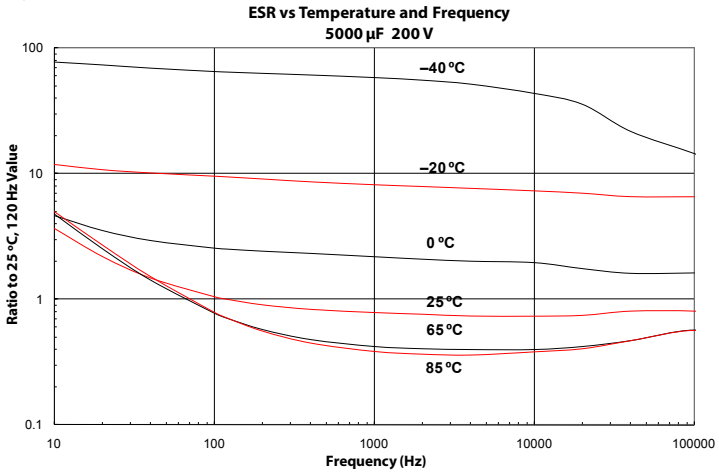

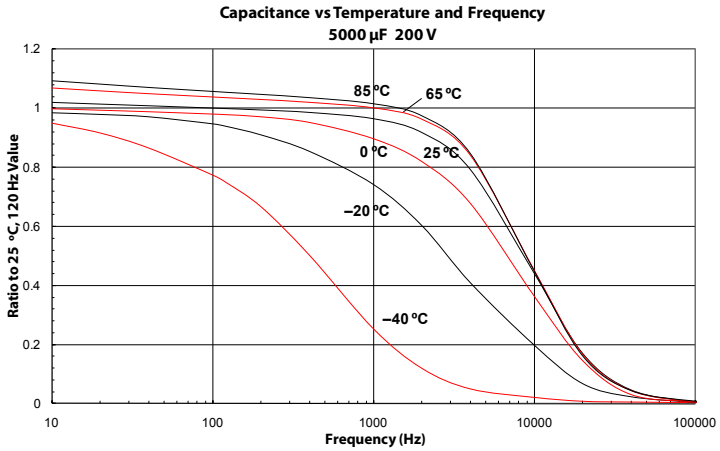

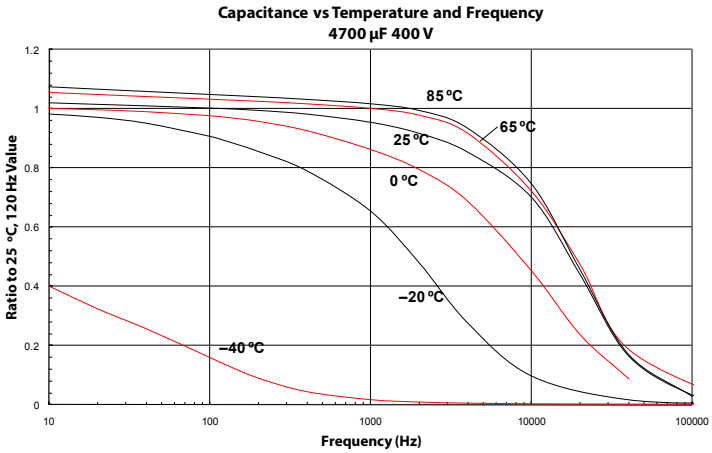

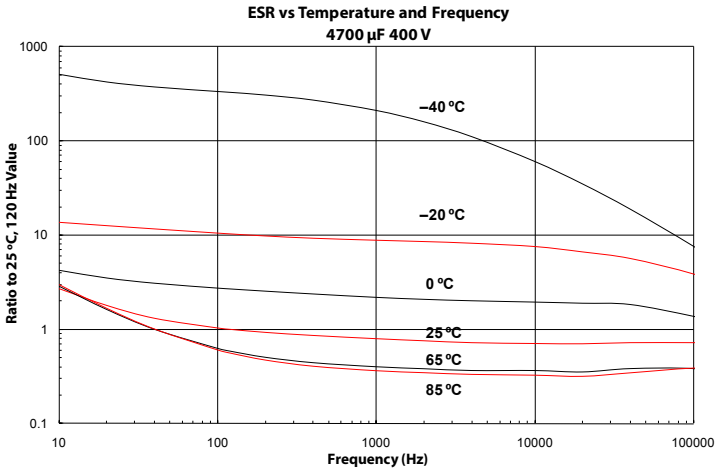

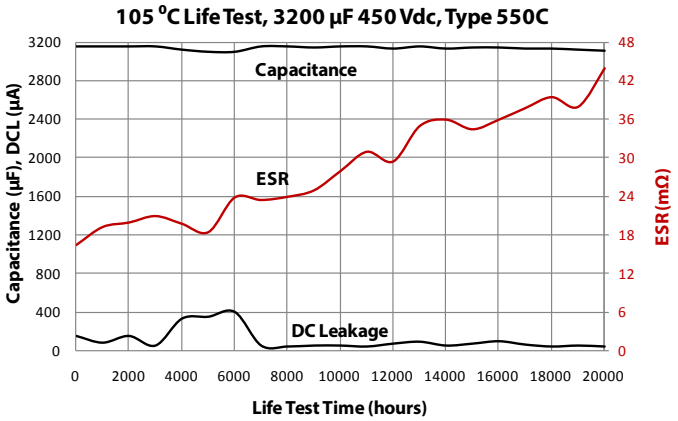

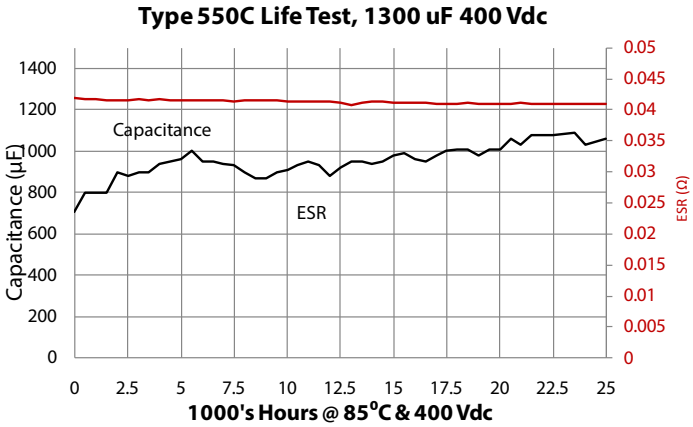

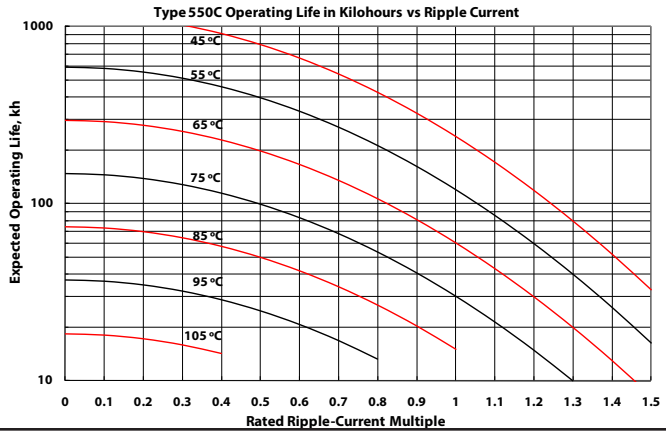

Notice and Disclaimer: All product drawings, descriptions, specifications, statements, information and data (collectively, the "Information") in this datasheet or other publication are subject to change. The customer is responsible for checking, confirming and verifying the extent to which the Information contained in this datasheet or other publication is applicable to an order at the time the order is placed. All Information given herein is believed to be accurate and reliable, but it is presented without any guarantee, warranty, representation or responsibility of any kind, expressed or implied. Statements of suitability for certain applications are based on the knowledge that the Cornell Dubilier company providing such statements ("Cornell Dubilier") has of operating conditions that such Cornell Dubilier company regards as typical for such applications, but are not intended to constitute any guarantee, warranty or representation regarding any such matter – and Cornell Dubilier specifically and expressly disclaims any guarantee, warranty or representation concerning the suitability for a specific customer application, use, storage, transportation, or operating environment. The Information is intended for use only by customers who have the requisite experience and capability to determine the correct products for their application. Any technical advice inferred from this Information or otherwise provided by Cornell Dubilier with reference to the use of any Cornell Dubilier products is given gratis (unless otherwise specified by Cornell Dubilier), and Cornell Dubilier assumes no obligation or liability for the advice given or results obtained. Although Cornell Dubilier strives to apply the most stringent quality and safety standards regarding the design and manufacturing of its products, in light of the current state of the art, isolated component failures may still occur. Accordingly, customer applications which require a high degree of reliability or safety should employ suitable designs or other safeguards (such as installation of protective circuitry or redundancies or other appropriate protective measures) in order to ensure that the failure of an electrical component does not result in a risk of personal injury or property damage. Although all product-related warnings, cautions and notes must be observed, the customer should not assume that all safety measures are indicated in such warnings, cautions and notes, or that other safety measures may not be required.

click here to see hardware and mounting options

Type DCMC 85 °C High Capacitance, Screw Terminal, Aluminum

Highest Capacitance Screw Terminal Type

With more capacitance and often more ripple-current capabilty than the best-value Type 3186 capacitor, the Type DCMC capacitor is the better choice for high-capacitance, power supply filters and energy storage applications such as welding equipment,UPS systems and computer hold-up power. The extended cathode foil of the DCMC assures cool operation with heatflow from the capacitor element to the can.

Highlights

- Highest capacitance value
- Right for Power Supply and UPS systems
- Thermal-Pak™ extended cathode construction

Specifications

Temperature Range	–40 °C to +85 °C
Rated Voltage Range	6.3 Vdc to 550 Vdc
Capacitance Range	110 µF to 2.7 F
Capacitance Tolerance	–10% +75% ≤ 100 Vdc –10% +50% ≥ 160 Vdc
Leakage Current	≤ 6 $\sqrt{CV}$ µA, 6 mA max, at 5 min
Ripple Current Multipliers	Ambient Temperature

45 °C	55 °C	65 °C	75 °C	85 °C
2.24	2.00	1.73	1.41	1.00

Frequency	50 Hz	60 Hz	120 Hz	360 Hz	1 kHz	5 kHz	10 kHz & up
1 3/8" & 1 3/4" Diameters 6.3 to 160 V	0.92	0.94	1.00	1.05	1.10	1.10	1.12
200 to 350 V	0.80	0.85	1.00	1.17	1.30	1.30	1.32
400 to 550 V	0.78	0.83	1.00	1.20	1.35	1.36	1.40
2" & 2 1/2" Diameters 6.3 to 160 V	0.93	0.95	1.00	1.04	1.07	1.11	1.12
200 to 350 V	0.81	0.87	1.00	1.13	1.20	1.24	1.26
400 to 550 V	0.79	0.83	1.00	1.17	1.26	1.30	1.34
3" & 3 1/2" Diameters 6.3 to 160 V	0.95	0.96	1.00	1.02	1.04	1.05	1.05
200 to 350 V	0.85	0.88	1.00	1.08	1.12	1.14	1.17
400 to 550 V	0.82	0.84	1.00	1.13	1.20	1.24	1.27

Low Temperature Characteristics	Impedance ratio: $Z_{-20°C}/Z_{+25°C}$ ≤ 20 (6.3–10 Vdc) ≤ 8 (16–50 Vdc) ≤ 4 (63–100 Vdc) ≤ 3 (150–550 Vdc)
Endurance Life Test	2000 h @ full load at 85 °C Δ Capacitance ±20% ESR 200% of limit DCL 100% of limit
Shelf Life Test	500 h @ 85 °C Capacitance 100% of limit ESR 100% of limit DCL 100% of limit
Vibration	5 to 55 Hz, 0.06" and 10 g max, 1.5 h each of 2 axes
RoHS Compliant	

Type DCMC 85 °C High Capacitance, Screw Terminal, Aluminum

Highest Capacitance Screw Terminal Type

Part Numbering System

DCMC	472	U	400	DC	2	B	S
Type	Capacitance	Tolerance	Voltage	Case Code	Insulation	Terminal	Can Style
	100 = 10 µF **101** = 100 µF **492** = 4900 µF **433**= 43,000 µF	**M** = ±20% **U** = –10%+75% **T** = –10%+50%	**6R3** = 6.3 Vdc **063** = 63 Vdc **400** = 400 Vdc		**0**= None **1**= Polyester **2**= PVC	**A** = Low Post **B** = High Post **D** = High Current, Low Post **E** = High Current, High Post **F or M** = M5 Post **G** = M6 Low Post **H** = M6 High Post	**Blank**= Standard Can **S**= Stud Bottom **P**= Stud with Thermal Pad

Polyester insulation is not available for 3.5-inch diameter units.
Standard insulation is 0.008-in PVC sleeve with 0.01-in polypropylene end disk.

Outline Drawing

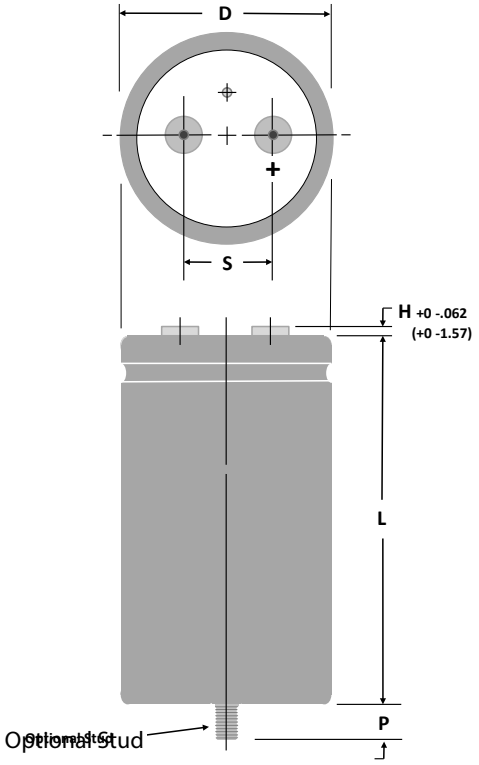

NOTE: With the stud-mount feature, a thermally-conductive disk can be inserted in the bottom flush with the outer insulating sleeve.This reduces the thermal resistance through the can bottom by 0.3 °C/W. Can Style P.

Stud Dimensions

Case Diam.	Stud Thread	P± 0.039" (±1.0 mm)
1.375	M8	0.470" (12.0)
1.750	M8	0.470" (12.0)
2.000	M12	0.630" (16.0)
2.500	M12	0.630" (16.0)
3.000	M12	0.630" (16.0)
3.500	M12	0.630" (16.0)

Terminal Dimensions

Terminal Style	For Case Diameters	Code	Post Diameter in	Post Diameter mm	H max in	H max mm	Thread	min Full Thread in	min Full Thread mm	Torque in·lb	Torque N·m
Low Post	1⅜ to 3	A	0.314	8.0	0.094	2.4	10–32	0.218	5.5	25	2.82
High Post	1⅜ to 3	B	0.314	8.0	0.281	7.1	10–32	0.375	9.5	25	2.82
High Current, Low	2½ to 3½	D	0.684	17.4	0.125	3.2	¼–28	0.344	8.7	60	6.78
High Current, High	2½ to 3½	E	0.684	17.4	0.281	7.1	¼–28	0.469	11.9	60	6.78
M5 Post, Small	1⅜ to 2	M	0.314	8.0	0.281	7.1	M5	0.375	9.5	25	2.82
M5 Post	2½ & 3	F	0.512	13.0	0.230	5.8	M5	0.344	8.7	25	2.82
M6 Low Post	2½ to 3½	G	0.684	17.4	0.125	3.2	M6	0.344	8.7	60	6.78
M6 High Post	2½ to 3½	H	0.684	17.4	0.281	7.1	M6	0.469	11.9	60	6.78

NOTE: Only high post and M5 post terminals are available at 550 Vdc as they meet the required creepage distance.

Type DCMC 85 °C High Capacitance, Screw Terminal, Aluminum

Highest Capacitance Screw Terminal Type

Uninsulated Case Dimensions

For insulated case, add 0.024"(0.610 mm) to "D"and 0.030"(0.762 mm) to height.

	Diam. (D)		Length (L)		Terminals (S)		Typical Weight	
Case Code	±.031 Inches	±.78 mm	±.062 Inches	±1.57 mm	±0.015 Inches	±.38 mm	oz	g
AK	1.375	34.93	1.625	41.28	0.50	12.70	1.9	54
AA	1.375	34.93	2.125	53.98	0.50	12.70	2.0	57
AH	1.375	34.93	2.625	66.68	0.50	12.70	2.7	77
AB	1.375	34.93	3.125	79.38	0.50	12.70	3.3	94
AJ	1.375	34.93	3.625	92.08	0.50	12.70	3.8	108
AC	1.375	34.93	4.125	104.78	0.50	12.70	4.4	125
AD	1.375	34.93	4.625	117.48	0.50	12.70	5.1	145
AE	1.375	34.93	5.125	130.18	0.50	12.70	6.8	193
AF	1.375	34.93	5.625	142.88	0.50	12.70	8.1	230
EA	1.750	44.45	2.125	53.98	0.75	19.05	2.7	76
EH	1.750	44.45	2.625	66.68	0.75	19.05	3.8	108
EB	1.750	44.45	3.125	79.38	0.75	19.05	5.1	145
EJ	1.750	44.45	3.625	92.08	0.75	19.05	6.8	193
EC	1.750	44.45	4.125	104.78	0.75	19.05	8.1	230
ED	1.750	44.45	4.625	117.48	0.75	19.05	9.0	255
EE	1.750	44.45	5.125	130.18	0.75	19.05	9.5	269
EF	1.750	44.45	5.625	142.88	0.75	19.05	10.5	298
BA	2.000	50.80	2.125	53.98	0.88	22.23	5.4	153
BH	2.000	50.80	2.625	66.68	0.88	22.23	6.1	173
BB	2.000	50.80	3.125	79.38	0.88	22.23	6.8	193
BJ	2.000	50.80	3.625	92.08	0.88	22.23	8.2	232
BC	2.000	50.80	4.125	104.78	0.88	22.23	9.5	269
BD	2.000	50.80	4.625	117.48	0.88	22.23	10.3	292
BE	2.000	50.80	5.125	130.18	0.88	22.23	10.7	303
BF	2.000	50.80	5.625	142.88	0.88	22.23	13.0	369
CH	2.500	63.50	2.625	66.68	1.13	28.58	9.2	261
CB	2.500	63.50	3.125	79.38	1.13	28.58	10.4	295
CJ	2.500	63.50	3.625	92.08	1.13	28.58	12.7	361
CC	2.500	63.50	4.125	104.78	1.13	28.58	15.0	425
CD	2.500	63.50	4.625	117.48	1.13	28.58	17.2	488
CE	2.500	63.50	5.125	130.18	1.13	28.58	19.3	547
CF	2.500	63.50	5.625	142.88	1.13	28.58	21.4	607
DB	3.000	76.20	3.125	79.38	1.25	31.75	16.7	473
DJ	3.000	76.20	3.625	92.08	1.25	31.75	20.0	567
DC	3.000	76.20	4.125	104.78	1.25	31.75	22.2	629
DD	3.000	76.20	4.625	117.48	1.25	31.75	25.5	723
DE	3.000	76.20	5.125	130.18	1.25	31.75	30.0	850
DF	3.000	76.20	5.625	142.88	1.25	31.75	31.9	904
DM	3.000	76.20	6.625	168.28	1.25	31.75	34.4	933.5
DP	3.000	76.20	5.875	149.23	1.25	31.75	32.8	931
DN	3.000	76.20	7.625	193.68	1.25	31.75	39.5	1119
DG	3.000	76.20	8.625	219.08	1.25	31.75	43.3	1227
FC	3.500	88.90	4.125	104.78	1.25	31.75	30.0	850
FD	3.500	88.90	4.625	117.48	1.25	31.75	34.4	976
FE	3.500	88.90	5.125	130.18	1.25	31.75	40.5	1148
FF	3.500	88.90	5.625	142.88	1.25	31.75	43.1	1221
FP	3.500	88.90	5.875	149.23	1.25	31.75	44.3	1257
FN	3.500	88.90	7.625	193.68	1.25	31.75	53.3	1512
FG	3.500	88.90	8.625	219.08	1.25	31.75	58.5	1658
FM	3.500	88.90	6.625	168.28	1.25	31.75	46.4	1315.4

Type DCMC 85 °C High Capacitance, Screw Terminal, Aluminum

Highest Capacitance Screw Terminal Type

Ratings

Cap. (µF)	Catalog Part Number	ESR Max. @ 25 °C 120 Hz (mΩ)	Ripple Max. @ 85°C 120 Hz (A)	Nominal Size D x L (inches)
6.3 Vdc (8 Vdc Surge)				
28000	DCMC283U6R3AK2B	46.9	4.1	1 3/8 x 1 5/8
57000	DCMC573U6R3AA2B	26.5	6.1	1 3/8 x 2 1/8
68000	DCMC683U6R3AH2B	18.8	7.8	1 3/8 x 2 5/8
91000	DCMC913U6R3AB2B	14.7	9.4	1 3/8 x 3 1/8
100000	DCMC104U6R3EA2B	18.8	8.8	1 3/4 x 2 1/8
110000	DCMC114U6R3AJ2B	12.8	11.2	1 3/8 x 3 5/8
120000	DCMC124U6R3EH2B	14.3	11.0	1 3/4 x 2 5/8
130000	DCMC134U6R3AC2B	11.0	13.0	1 3/8 x 4 1/8
130000	DCMC134U6R3BA2B	14.2	11.9	2 x 2 1/8
150000	DCMC154U6R3BH2B	9.9	11.6	2 x 2 5/8
160000	DCMC164U6R3AD2B	9.8	12.5	1 3/8 x 4 5/8
160000	DCMC164U6R3EB2B	11.0	12.6	1 3/4 x 3 1/8
180000	DCMC184U6R3AE2B	8.9	14.7	1 3/8 x 5 1/8
200000	DCMC204U6R3AF2B	8.3	16.0	1 3/8 x 5 5/8
200000	DCMC204U6R3EJ2B	9.1	15.9	1 3/4 x 3 5/8
210000	DCMC214U6R3BB2B	7.8	17.8	2 x 3 1/8
240000	DCMC244U6R3EC2B	7.9	18.3	1 3/4 x 4 1/8
260000	DCMC264U6R3BJ2B	6.5	15.6	2 x 3 5/8
260000	DCMC264U6R3CH2B	6.9	16.2	2 1/2 x 2 5/8
280000	DCMC284U6R3ED2B	7.0	17.1	1 3/4 x 4 5/8
310000	DCMC314U6R3BC2B	5.6	20.2	2 x 4 1/8
320000	DCMC324U6R3EE2B	6.4	19.7	1 3/4 x 5 1/8
350000	DCMC354U6R3CB2B	5.3	22.6	2 1/2 x 3 1/8
360000	DCMC364U6R3EF2B	6.0	22.0	1 3/4 x 5 5/8
370000	DCMC374U6R3BD2B	5.0	24.9	2 x 4 5/8
420000	DCMC424U6R3BE2B	4.5	23.0	2 x 5 1/8
440000	DCMC444U6R3CJ2B	4.3	25.0	2 1/2 x 3 5/8
470000	DCMC474U6R3BF2B	4.2	26.7	2 x 5 5/8
520000	DCMC524U6R3DB2B	4.1	28.3	3 x 3 1/8
530000	DCMC534U6R3CC2D	3.8	30.4	2 1/2 x 4 1/8
610000	DCMC614U6R3CD2D	3.4	33.4	2 1/2 x 4 5/8
650000	DCMC654U6R3DJ2D	3.3	34.6	3 x 3 5/8
700000	DCMC704U6R3CE2D	3.1	33.3	2 1/2 x 5 1/8
780000	DCMC784U6R3DC2D	2.9	35.7	3 x 4 1/8
790000	DCMC794U6R3CF2D	2.8	37.9	2 1/2 x 5 5/8
910000	DCMC914U6R3DD2D	2.6	41.0	3 x 4 5/8
1000000	DCMC105U6R3DE2D	2.4	44.4	3 x 5 1/8
1100000	DCMC115U6R3DF2D	2.4	45.0	3 x 5 5/8
1100000	DCMC115U6R3FC2D	3.0	41.4	3 1/2 x 4 1/8
1200000	DCMC125U6R3DP2D	2.4	51.5	3 x 5 7/8
1200000	DCMC125U6R3FD2D	2.6	43.2	3 1/2 x 4 5/8
1400000	DCMC145U6R3FE2D	2.4	47.1	3 1/2 x 5 1/8
1600000	DCMC165U6R3DN2D	2.4	49.3	3 x 7 5/8
1600000	DCMC165U6R3FF2D	2.4	47.9	3 1/2 x 5 5/8
1700000	DCMC175U6R3FP2D	2.4	49.4	3 1/2 x 5 7/8
1900000	DCMC195U6R3DG2D	2.4	49.9	3 x 8 5/8
2300000	DCMC235U6R3FN2D	2.4	54.1	3 1/2 x 7 5/8
2700000	DCMC275U6R3FG2D	2.4	56.5	3 1/2 x 8 5/8
10 Vdc (12 Vdc Surge)				
24000	DCMC243U010AK2B	46.9	4.1	1 3/8 x 1 5/8
44000	DCMC443U010AA2B	26.5	6.1	1 3/8 x 2 1/8
57000	DCMC573U010AH2B	20.1	7.5	1 3/8 x 2 5/8
76000	DCMC763U010AB2B	15.5	9.2	1 3/8 x 3 1/8
79000	DCMC793U010EA2B	18.8	8.8	1 3/4 x 2 1/8
96000	DCMC963U010AJ2B	12.8	11.2	1 3/8 x 3 5/8
100000	DCMC104U010EH2B	14.3	11.0	1 3/4 x 2 5/8
100000	DCMC104U010BA2B	17.6	10.3	2 x 2 1/8
110000	DCMC114U010AC2B	11.0	13.5	1 3/8 x 4 1/8
130000	DCMC134U010AD2B	9.8	11.6	1 3/8 x 4 5/8
140000	DCMC144U010EB2B	11.0	11.8	1 3/4 x 3 1/8
140000	DCMC144U010BH2B	13.4	11.4	2 x 2 5/8
150000	DCMC154U010AE2B	8.9	14.7	1 3/8 x 5 1/8
170000	DCMC174U010AF2B	8.3	16.0	1 3/8 x 5 5/8
170000	DCMC174U010EJ2B	9.1	15.9	1 3/4 x 3 5/8
180000	DCMC184U010BB2B	10.5	15.4	2 x 3 1/8
210000	DCMC214U010EC2B	7.9	18.3	1 3/4 x 4 1/8
220000	DCMC224U010BJ2B	8.7	13.5	2 x 3 5/8
220000	DCMC224U010CH2B	8.8	14.4	2 1/2 x 2 5/8
240000	DCMC244U010ED2B	7.0	17.1	1 3/4 x 4 5/8
270000	DCMC274U010BC2B	7.5	17.4	2 x 4 1/8
280000	DCMC284U010EE2B	6.4	19.7	1 3/4 x 5 1/8
290000	DCMC294U010CB2B	6.7	20.0	2 1/2 x 3 1/8
310000	DCMC314U010EF2B	6.0	22.0	1 3/4 x 5 5/8
310000	DCMC314U010BD2B	6.7	21.5	2 x 4 5/8
350000	DCMC354U010BE2B	6.1	19.8	2 x 5 1/8
370000	DCMC374U010CJ2B	5.5	22.1	2 1/2 x 3 5/8
400000	DCMC404U010BF2B	5.7	22.9	2 x 5 5/8
430000	DCMC434U010DB2B	4.1	28.3	3 x 3 1/8
440000	DCMC444U010CC2B	4.8	26.9	2 1/2 x 4 1/8
510000	DCMC514U010CD2B	4.3	29.5	2 1/2 x 4 5/8
540000	DCMC544U010DJ2D	3.3	34.6	3 x 3 5/8
590000	DCMC594U010CE2B	3.9	29.5	2 1/2 x 5 1/8
640000	DCMC644U010DC2D	2.9	35.7	3 x 4 1/8
660000	DCMC664U010CF2D	3.6	33.5	2 1/2 x 5 5/8
750000	DCMC754U010DD2D	2.6	41.0	3 x 4 5/8
860000	DCMC864U010DE2D	2.4	44.4	3 x 5 1/8
900000	DCMC904U010FC2D	2.9	41.6	3 1/2 x 4 1/8
940000	DCMC944U010DF2D	2.3	47.1	3 x 5 5/8
1000000	DCMC105U010DP2D	2.3	52.8	3 x 5 7/8
1000000	DCMC105U010FD2D	2.8	42.0	3 1/2 x 4 5/8
1200000	DCMC125U010FE2D	2.5	46.3	3 1/2 x 5 1/8
1300000	DCMC135U010FF2D	2.2	50.3	3 1/2 x 5 5/8
1400000	DCMC145U010DN2D	2.1	52.7	3 x 7 5/8
1400000	DCMC145U010FP2D	2.1	52.7	3 1/2 x 5 7/8
1600000	DCMC165U010DG2D	2.1	54.2	3 x 8 5/8

Type DCMC 85 °C High Capacitance, Screw Terminal, Aluminum

Highest Capacitance Screw Terminal Type

Cap. (µF)	Catalog Part Number	ESR Max. @ 25 °C 120 Hz (mΩ)	Ripple Max. @ 85°C 120 Hz (A)	Nominal Size D x L (inches)
1900000	DCMC195U010FN2D	1.8	64.3	3 1/2 x 7 5/8
2200000	DCMC225U010FG2D	1.5	70.6	3 1/2 x 8 5/8
16 Vdc (20 Vdc Surge)				
21000	DCMC213U016AK2B	46.9	4.1	1 3/8 x 1 5/8
35000	DCMC353U016AA2B	26.5	6.1	1 3/8 x 2 1/8
49000	DCMC493U016AH2B	20.1	7.5	1 3/8 x 2 5/8
57000	DCMC573U016EA2B	18.8	8.3	1 3/4 x 2 1/8
62000	DCMC623U016AB2B	15.5	9.7	1 3/8 x 3 1/8
73000	DCMC733U016BA2B	17.6	9.5	2 x 2 1/8
76000	DCMC763U016AJ2B	12.8	11.7	1 3/8 x 3 5/8
77000	DCMC773U016EH2B	15.3	11.1	1 3/4 x 2 5/8
90000	DCMC903U016AC2B	11.0	13.5	1 3/8 x 4 1/8
99000	DCMC993U016AD2B	9.8	11.6	1 3/8 x 4 5/8
100000	DCMC104U016EB2B	12.5	11.1	1 3/4 x 3 1/8
110000	DCMC114U016AE2B	8.9	14.0	1 3/8 x 5 1/8
110000	DCMC114U016BH2B	13.4	12.0	2 x 2 5/8
130000	DCMC134U016AF2B	8.3	16.0	1 3/8 x 5 5/8
130000	DCMC134U016EJ2B	10.9	14.6	1 3/4 x 3 5/8
130000	DCMC134U016BB2B	10.5	15.4	2 x 3 1/8
150000	DCMC154U016EC2B	9.7	16.5	1 3/4 x 4 1/8
160000	DCMC164U016BJ2B	8.7	13.5	2 x 3 5/8
160000	DCMC164U016CH2B	8.8	14.4	2 1/2 x 2 5/8
180000	DCMC184U016ED2B	8.8	15.3	1 3/4 x 4 5/8
200000	DCMC204U016BC2B	7.5	17.4	2 x 4 1/8
210000	DCMC214U016EE2B	8.2	17.5	1 3/4 x 5 1/8
220000	DCMC224U016CB2B	6.7	20.0	2 1/2 x 3 1/8
230000	DCMC234U016EF2B	7.8	19.3	1 3/4 x 5 5/8
230000	DCMC234U016BD2B	6.7	21.5	2 x 4 5/8
260000	DCMC264U016BE2B	6.1	19.8	2 x 5 1/8
270000	DCMC274U016CJ2B	5.5	22.1	2 1/2 x 3 5/8
290000	DCMC294U016BF2B	5.7	22.9	2 x 5 5/8
320000	DCMC324U016CC2B	5.0	25.6	2 1/2 x 4 1/8
320000	DCMC324U016DB2B	4.2	28.9	3 x 3 1/8
380000	DCMC384U016CD2B	4.6	28.5	2 1/2 x 4 5/8
400000	DCMC404U016DJ2D	3.6	33.3	3 x 3 5/8
430000	DCMC434U016CE2B	4.4	27.9	2 1/2 x 5 1/8
480000	DCMC484U016DC2D	3.3	33.8	3 x 4 1/8
490000	DCMC494U016CF2D	4.2	31.2	2 1/2 x 5 5/8
560000	DCMC564U016DD2D	3.1	37.5	3 x 4 5/8
650000	DCMC654U016DE2D	2.8	40.5	3 x 5 1/8
700000	DCMC704U016FC2D	2.9	41.6	3 1/2 x 4 1/8
710000	DCMC714U016DF2D	2.8	42.8	3 x 5 5/8
750000	DCMC754U016DP2D	2.8	48.3	3 x 5 7/8
810000	DCMC814U016FD2D	2.8	42.1	3 1/2 x 4 5/8
930000	DCMC934U016FE2D	2.5	46.2	3 1/2 x 5 1/8
1000000	DCMC105U016FF2D	2.4	48.3	3 1/2 x 5 5/8
1000000	DCMC105U016DN2D	2.6	47.5	3 x 7 5/8
1500000	DCMC155U016FN2D	2.3	55.4	3 1/2 x 7 5/8

Cap. (µF)	Catalog Part Number	ESR Max. @ 25 °C 120 Hz (mΩ)	Ripple Max. @ 85°C 120 Hz (A)	Nominal Size D x L (inches)
1700000	DCMC175U016FG2D	2.3	58.2	3 1/2 x 8 5/8
25 Vdc (30 Vdc Surge)				
12000	DCMC123U025AK2B	37.1	4.7	1 3/8 x 1 5/8
20000	DCMC203U025AA2B	23.6	6.5	1 3/8 x 2 1/8
24000	DCMC243U025AH2B	20.1	7.5	1 3/8 x 2 5/8
33000	DCMC333U025AB2B	19.3	8.2	1 3/8 x 3 1/8
36000	DCMC363U025EA2B	21.8	8.2	1 3/4 x 2 1/8
42000	DCMC423U025AJ2B	19.4	9.1	1 3/8 x 3 5/8
43000	DCMC433U025EH2B	19.4	9.5	1 3/4 x 2 5/8
47000	DCMC473U025BA2B	21.8	9.3	2 x 2 1/8
52000	DCMC523U025AC2B	17.6	10.7	1 3/8 x 4 1/8
59000	DCMC593U025BH2B	16.5	9.0	2 x 2 5/8
60000	DCMC603U025EB2B	15.2	10.1	1 3/4 x 3 1/8
61000	DCMC613U025AD2B	16.4	10.3	1 3/8 x 4 5/8
71000	DCMC713U025AE2B	15.2	11.3	1 3/8 x 5 1/8
76000	DCMC763U025BB2B	12.2	13.2	2 x 3 1/8
77000	DCMC773U025EJ2B	12.8	13.4	1 3/4 x 3 5/8
80000	DCMC803U025AF2B	14.0	13.3	1 3/8 x 5 5/8
90000	DCMC903U025CH2B	9.5	16.7	2 1/2 x 2 5/8
94000	DCMC943U025EC2B	11.2	11.8	1 3/4 x 4 1/8
98000	DCMC983U025BJ2B	9.8	13.6	2 x 3 5/8
110000	DCMC114U025ED2B	10.2	14.2	1 3/4 x 4 5/8
120000	DCMC124U025BC2B	8.3	16.6	2 x 4 1/8
130000	DCMC134U025EE2B	9.6	16.1	1 3/4 x 5 1/8
130000	DCMC134U025CB2B	7.6	18.9	2 1/2 x 3 1/8
140000	DCMC144U025BD2B	7.3	19.9	2 x 4 5/8
150000	DCMC154U025EF2B	9.1	18.4	1 3/4 x 5 5/8
160000	DCMC164U025BE2B	6.6	19.1	2 x 5 1/8
160000	DCMC164U025CJ2B	6.4	20.5	2 1/2 x 3 5/8
190000	DCMC194U025BF2B	6.1	22.2	2 x 5 5/8
190000	DCMC194U025DB2B	5.0	25.5	3 x 3 1/8
200000	DCMC204U025CC2B	5.8	24.6	2 1/2 x 4 1/8
230000	DCMC234U025CD2B	5.2	26.8	2 1/2 x 4 5/8
240000	DCMC244U025DJ2D	4.3	30.5	3 x 3 5/8
270000	DCMC274U025CE2B	5.0	26.0	2 1/2 x 5 1/8
300000	DCMC304U025DC2D	3.9	31.0	3 x 4 1/8
310000	DCMC314U025CF2B	4.6	29.8	2 1/2 x 5 5/8
350000	DCMC354U025DD2D	3.5	35.1	3 x 4 5/8
400000	DCMC404U025DE2D	3.3	37.5	3 x 5 1/8
430000	DCMC434U025FC2D	3.8	36.0	3 1/2 x 4 1/8
460000	DCMC464U025DF2D	3.2	39.9	3 x 5 5/8
490000	DCMC494U025DP2D	3.1	46.0	3 x 5 7/8
500000	DCMC504U025FD2D	3.5	37.6	3 1/2 x 4 5/8
580000	DCMC584U025FE2D	3.2	40.3	3 1/2 x 5 1/8
660000	DCMC664U025FF2D	3.1	42.8	3 1/2 x 5 5/8
670000	DCMC674U025DN2D	3.1	44.0	3 x 7 5/8
700000	DCMC704U025FP2D	2.9	44.9	3 1/2 x 5 7/8
780000	DCMC784U025DG2D	3.0	44.9	3 x 8 5/8

Type DCMC 85 °C High Capacitance, Screw Terminal, Aluminum

Highest Capacitance Screw Terminal Type

Cap. (µF)	Catalog Part Number	ESR Max. @ 25 °C 120 Hz (mΩ)	Ripple Max. @ 85°C 120 Hz (A)	Nominal Size D x L (inches)
950000	DCMC954U025FN2D	3.0	48.7	3 1/2 x 7 5/8
1100000	DCMC115U025FG2D	2.9	51.1	3 1/2 x 8 5/8
35 Vdc (40 Vdc Surge)				
8200	DCMC822U035AK2B	41.7	4.4	1 3/8 x 1 5/8
14000	DCMC143U035AA2B	26.7	6.1	1 3/8 x 2 1/8
16000	DCMC163U035AH2B	23.2	7.0	1 3/8 x 2 5/8
23000	DCMC233U035AB2B	21.9	7.7	1 3/8 x 3 1/8
25000	DCMC253U035EA2B	22.3	8.1	1 3/4 x 2 1/8
30000	DCMC303U035AJ2B	21.6	8.6	1 3/8 x 3 5/8
30000	DCMC303U035EH2B	19.2	9.5	1 3/4 x 2 5/8
32000	DCMC323U035BA2B	24.5	8.8	2 x 2 1/8
36000	DCMC363U035AC2B	20.1	10.0	1 3/8 x 4 1/8
41000	DCMC413U035BH2B	20.1	8.1	2 x 2 5/8
42000	DCMC423U035EB2B	15.5	10.0	1 3/4 x 3 1/8
43000	DCMC433U035AD2B	17.8	9.9	1 3/8 x 4 5/8
49000	DCMC493U035AE2B	15.5	11.2	1 3/8 x 5 1/8
53000	DCMC533U035BB2B	15.9	11.6	2 x 3 1/8
54000	DCMC543U035EJ2B	13.2	13.2	1 3/4 x 3 5/8
56000	DCMC563U035AF2B	14.1	13.3	1 3/8 x 5 5/8
63000	DCMC633U035CH2B	14.8	13.4	2 1/2 x 2 5/8
66000	DCMC663U035EC2B	11.8	11.5	1 3/4 x 4 1/8
69000	DCMC693U035BJ2B	13.2	11.7	2 x 3 5/8
78000	DCMC783U035ED2B	10.6	13.9	1 3/4 x 4 5/8
84000	DCMC843U035BC2B	11.6	14.0	2 x 4 1/8
88000	DCMC883U035CB2B	11.5	14.7	2 1/2 x 3 1/8
90000	DCMC903U035EE2B	9.8	16.6	1 3/4 x 5 1/8
99000	DCMC993U035BD2B	10.5	16.6	2 x 4 5/8
100000	DCMC104U035EF2B	9.4	18.1	1 3/4 x 5 5/8
110000	DCMC114U035BE2B	9.8	15.6	2 x 5 1/8
110000	DCMC114U035CJ2B	9.4	16.9	2 1/2 x 3 5/8
130000	DCMC134U035BF2B	9.4	17.9	2 x 5 5/8
130000	DCMC134U035DB2B	6.9	21.8	3 x 3 1/8
140000	DCMC144U035CC2B	8.2	20.6	2 1/2 x 4 1/8
160000	DCMC164U035CD2B	7.4	22.5	2 1/2 x 4 5/8
170000	DCMC174U035DJ2B	5.7	26.4	3 x 3 5/8
190000	DCMC194U035CE2B	6.8	22.3	2 1/2 x 5 1/8
210000	DCMC214U035CF2B	6.1	24.7	2 1/2 x 5 5/8
210000	DCMC214U035DC2B	5.2	28.0	3 x 4 1/8
240000	DCMC244U035DD2D	4.7	30.5	3 x 4 5/8
280000	DCMC284U035DE2D	4.4	32.6	3 x 5 1/8
300000	DCMC304U035FC2D	4.9	31.7	3 1/2 x 4 1/8
320000	DCMC324U035DF2D	4.0	35.5	3 x 5 5/8
340000	DCMC344U035DP2D	3.9	40.9	3 x 5 7/8
350000	DCMC354U035FD2D	4.5	33.0	3 1/2 x 4 5/8
410000	DCMC414U035FE2D	4.0	36.2	3 1/2 x 5 1/8
460000	DCMC464U035FF2D	3.6	39.2	3 1/2 x 5 5/8
470000	DCMC474U035DN2D	3.8	39.8	3 x 7 5/8
490000	DCMC494U035FP2D	3.5	41.1	3 1/2 x 5 7/8

Cap. (µF)	Catalog Part Number	ESR Max. @ 25 °C 120 Hz (mΩ)	Ripple Max. @ 85°C 120 Hz (A)	Nominal Size D x L (inches)
550000	DCMC554U035DG2D	3.6	40.9	3 x 8 5/8
680000	DCMC684U035FN2D	3.4	45.7	3 1/2 x 7 5/8
790000	DCMC794U035FG2D	3.3	48.4	3 1/2 x 8 5/8
50 Vdc (65 Vdc Surge)				
5900	DCMC592U050AK2B	47.9	4.1	1 3/8 x 1 5/8
10000	DCMC103U050AA2B	30.9	5.6	1 3/8 x 2 1/8
12000	DCMC123U050AH2B	25.9	6.7	1 3/8 x 2 5/8
16000	DCMC163U050AB2B	23.6	7.4	1 3/8 x 3 1/8
18000	DCMC183U050EA2B	22.8	8.0	1 3/4 x 2 1/8
21000	DCMC213U050AJ2B	19.6	9.0	1 3/8 x 3 5/8
21000	DCMC213U050EH2B	20.2	9.3	1 3/4 x 2 5/8
23000	DCMC233U050BA2B	25.3	8.6	2 x 2 1/8
26000	DCMC263U050AC2B	18.7	10.4	1 3/8 x 4 1/8
29000	DCMC293U050BH2B	20.8	8.0	2 x 2 5/8
30000	DCMC303U050EB2B	15.6	9.9	1 3/4 x 3 1/8
31000	DCMC313U050AD2B	17.9	9.9	1 3/8 x 4 5/8
35000	DCMC353U050AE2B	15.9	11.0	1 3/8 x 5 1/8
38000	DCMC383U050EJ2B	13.5	12.5	1 3/4 x 3 5/8
38000	DCMC383U050BB2B	16.3	11.9	2 x 3 1/8
40000	DCMC403U050AF2B	14.4	13.1	1 3/8 x 5 5/8
45000	DCMC453U050CH2B	15.1	13.3	2 1/2 x 2 5/8
47000	DCMC473U050EC2B	12.0	11.4	1 3/4 x 4 1/8
49000	DCMC493U050BJ2B	13.6	11.6	2 x 3 5/8
56000	DCMC563U050ED2B	10.8	13.8	1 3/4 x 4 5/8
60000	DCMC603U050BC2B	11.9	13.8	2 x 4 1/8
63000	DCMC633U050CB2B	12.0	14.4	2 1/2 x 3 1/8
64000	DCMC643U050EE2B	9.8	16.6	1 3/4 x 5 1/8
71000	DCMC713U050BD2B	10.8	16.4	2 x 4 5/8
73000	DCMC733U050EF2B	9.5	18.0	1 3/4 x 5 5/8
81000	DCMC813U050CJ2B	10.3	15.2	2 1/2 x 3 5/8
82000	DCMC823U050BE2B	10.0	16.4	2 x 5 1/8
93000	DCMC933U050BF2B	9.5	17.7	2 x 5 5/8
94000	DCMC943U050DB2B	9.1	18.9	3 x 3 1/8
99000	DCMC993U050CC2B	8.9	19.8	2 1/2 x 4 1/8
120000	DCMC124U050CD2B	7.9	21.8	2 1/2 x 4 5/8
120000	DCMC124U050DJ2B	7.7	22.7	3 x 3 5/8
130000	DCMC134U050CE2B	7.2	21.7	2 1/2 x 5 1/8
150000	DCMC154U050CF2B	6.7	23.7	2 1/2 x 5 5/8
150000	DCMC154U050DC2B	6.9	24.2	3 x 4 1/8
170000	DCMC174U050DD2B	6.1	26.7	3 x 4 5/8
200000	DCMC204U050DE2B	5.9	28.1	3 x 5 1/8
200000	DCMC204U050FC2D	6.4	27.9	3 1/2 x 4 1/8
230000	DCMC234U050DF2D	5.6	30.0	3 x 5 5/8
230000	DCMC234U050FD2D	5.7	33.8	3 1/2 x 4 5/8
240000	DCMC244U050DP2D	5.4	30.2	3 x 5 7/8
270000	DCMC274U050FE2D	5.4	31.3	3 1/2 x 5 1/8
310000	DCMC314U050FF2D	5.1	33.2	3 1/2 x 5 5/8
320000	DCMC324U050FP2D	4.9	34.8	3 1/2 x 5 7/8

Type DCMC 85 °C High Capacitance, Screw Terminal, Aluminum

Highest Capacitance Screw Terminal Type

Cap. (µF)	Catalog Part Number	ESR Max. @ 25 °C 120 Hz (mΩ)	Ripple Max. @ 85°C 120 Hz (A)	Nominal Size D x L (inches)
350000	DCMC354U050DN2D	4.5	37.5	3 x 7 5/8
390000	DCMC394U050DG2D	4.1	38.6	3 x 8 5/8
450000	DCMC454U050FN2D	4.2	41.3	3 1/2 x 7 5/8
520000	DCMC524U050FG2D	3.8	44.9	3 1/2 x 8 5/8
63 Vdc (75 Vdc Surge)				
4100	DCMC412U063AK2B	60.6	3.6	1 3/8 x 1 5/8
7000	DCMC702U063AA2B	39.0	5.0	1 3/8 x 2 1/8
8300	DCMC832U063AH2B	32.7	5.9	1 3/8 x 2 5/8
12000	DCMC123U063AB2B	28.6	6.8	1 3/8 x 3 1/8
13000	DCMC133U063EA2B	27.9	7.2	1 3/4 x 2 1/8
15000	DCMC153U063AJ2B	26.1	7.8	1 3/8 x 3 5/8
15000	DCMC153U063EH2B	25.6	8.2	1 3/4 x 2 5/8
15000	DCMC153U063BA2B	28.0	8.2	2 x 2 1/8
18000	DCMC183U063AC2B	22.0	9.6	1 3/8 x 4 1/8
18000	DCMC183U063BH2B	22.6	7.7	2 x 2 5/8
21000	DCMC213U063AD2B	19.3	8.9	1 3/8 x 4 5/8
21000	DCMC213U063EB2B	19.5	9.4	1 3/4 x 3 1/8
25000	DCMC253U063AE2B	17.3	10.6	1 3/8 x 5 1/8
25000	DCMC253U063BB2B	18.1	10.8	2 x 3 1/8
27000	DCMC273U063EJ2B	16.2	11.9	1 3/4 x 3 5/8
28000	DCMC283U063AF2B	15.8	12.5	1 3/8 x 5 5/8
29000	DCMC293U063CH2B	26.8	9.9	2 1/2 x 2 5/8
32000	DCMC323U063BJ2B	15.1	10.2	2 x 3 5/8
33000	DCMC333U063EC2B	14.2	11.3	1 3/4 x 4 1/8
39000	DCMC393U063ED2B	12.8	12.7	1 3/4 x 4 5/8
39000	DCMC393U063BC2B	13.3	13.1	2 x 4 1/8
41000	DCMC413U063CB2B	19.3	11.4	2 1/2 x 3 1/8
45000	DCMC453U063EE2B	11.8	15.1	1 3/4 x 5 1/8
46000	DCMC463U063BD2B	12.1	15.5	2 x 4 5/8
51000	DCMC513U063EF2B	11.2	16.6	1 3/4 x 5 5/8
52000	DCMC523U063CJ2B	17.1	11.8	2 1/2 x 3 5/8
53000	DCMC533U063BE2B	11.3	15.5	2 x 5 1/8
60000	DCMC603U063BF2B	10.7	16.7	2 x 5 5/8
61000	DCMC613U063DB2B	14.9	14.8	3 x 3 1/8
64000	DCMC643U063CC2B	13.7	16.0	2 1/2 x 4 1/8
76000	DCMC763U063CD2B	11.8	17.8	2 1/2 x 4 5/8
78000	DCMC783U063DJ2B	12.1	18.1	3 x 3 5/8
87000	DCMC873U063CE2B	11.0	17.6	2 1/2 x 5 1/8
95000	DCMC953U063DC2B	10.8	18.6	3 x 4 1/8
99000	DCMC993U063CF2B	10.5	19.7	2 1/2 x 5 5/8
110000	DCMC114U063DD2B	9.9	21.0	3 x 4 5/8
130000	DCMC134U063DE2B	8.8	23.0	3 x 5 1/8
130000	DCMC134U063FC2D	9.9	22.3	3 1/2 x 4 1/8
150000	DCMC154U063DF2B	7.9	25.3	3 x 5 5/8
150000	DCMC154U063FD2D	9.0	26.8	3 1/2 x 4 5/8
160000	DCMC164U063DP2B	7.5	25.5	3 x 5 7/8
180000	DCMC184U063FE2D	7.9	25.7	3 1/2 x 5 1/8
200000	DCMC204U063FF2D	7.2	28.0	3 1/2 x 5 5/8

Cap. (µF)	Catalog Part Number	ESR Max. @ 25 °C 120 Hz (mΩ)	Ripple Max. @ 85°C 120 Hz (A)	Nominal Size D x L (inches)
210000	DCMC214U063FP2D	6.8	29.4	3 1/2 x 5 7/8
230000	DCMC234U063DN2D	6.5	31.2	3 x 7 5/8
250000	DCMC254U063DG2D	5.7	32.6	3 x 8 5/8
300000	DCMC304U063FN2D	5.8	35.3	3 1/2 x 7 5/8
350000	DCMC354U063FG2D	5.2	38.5	3 1/2 x 8 5/8
75 Vdc (95 Vdc Surge)				
3200	DCMC322U075AK2B	76.2	3.2	1 3/8 x 1 5/8
5300	DCMC532U075AA2B	50.7	4.4	1 3/8 x 2 1/8
6400	DCMC642U075AH2B	41.7	5.2	1 3/8 x 2 5/8
9000	DCMC902U075AB2B	38.6	5.8	1 3/8 x 3 1/8
9900	DCMC992U075EA2B	55.6	5.1	1 3/4 x 2 1/8
12000	DCMC123U075AJ2B	34.3	6.8	1 3/8 x 3 5/8
12000	DCMC123U075EH2B	47.3	6.1	1 3/4 x 2 5/8
12000	DCMC123U075BA2B	34.8	7.4	2 x 2 1/8
14000	DCMC143U075AC2B	30.5	8.1	1 3/8 x 4 1/8
14000	DCMC143U075BH2B	27.5	6.9	2 x 2 5/8
16000	DCMC163U075EB2B	34.1	6.7	1 3/4 x 3 1/8
17000	DCMC173U075AD2B	26.2	8.2	1 3/8 x 4 5/8
19000	DCMC193U075AE2B	23.8	9.0	1 3/8 x 5 1/8
19000	DCMC193U075BB2B	21.4	10.0	2 x 3 1/8
21000	DCMC213U075EJ2B	26.9	9.3	1 3/4 x 3 5/8
22000	DCMC223U075AF2B	21.4	10.8	1 3/8 x 5 5/8
23000	DCMC233U075CH2B	30.0	9.4	2 1/2 x 2 5/8
25000	DCMC253U075BJ2B	18.0	9.3	2 x 3 5/8
26000	DCMC263U075EC2B	22.3	9.0	1 3/4 x 4 1/8
30000	DCMC303U075ED2B	19.2	10.4	1 3/4 x 4 5/8
30000	DCMC303U075BC2B	15.6	12.1	2 x 4 1/8
32000	DCMC323U075CB2B	21.6	10.7	2 1/2 x 3 1/8
35000	DCMC353U075EE2B	16.9	12.6	1 3/4 x 5 1/8
35000	DCMC353U075BD2B	13.9	14.4	2 x 4 5/8
40000	DCMC403U075EF2B	15.2	14.3	1 3/4 x 5 5/8
41000	DCMC413U075BE2B	12.8	13.7	2 x 5 1/8
41000	DCMC413U075CJ2B	17.8	12.3	2 1/2 x 3 5/8
46000	DCMC463U075BF2B	12.0	15.8	2 x 5 5/8
47000	DCMC473U075DB2B	18.0	13.4	3 x 3 1/8
50000	DCMC503U075CC2B	15.1	15.2	2 1/2 x 4 1/8
59000	DCMC593U075CD2B	13.5	16.7	2 1/2 x 4 5/8
61000	DCMC613U075DJ2B	14.4	16.6	3 x 3 5/8
68000	DCMC683U075CE2B	12.0	16.8	2 1/2 x 5 1/8
74000	DCMC743U075DC2B	12.9	17.0	3 x 4 1/8
77000	DCMC773U075CF2B	11.2	19.0	2 1/2 x 5 5/8
88000	DCMC883U075DD2B	11.8	19.2	3 x 4 5/8
100000	DCMC104U075DE2B	10.4	21.1	3 x 5 1/8
100000	DCMC104U075FC2D	11.8	20.4	3 1/2 x 4 1/8
110000	DCMC114U075DF2B	9.4	23.3	3 x 5 5/8
120000	DCMC124U075DP2B	8.9	26.9	3 x 5 7/8
120000	DCMC124U075FD2D	10.7	21.4	3 1/2 x 4 5/8
140000	DCMC144U075FE2D	9.4	23.7	3 1/2 x 5 1/8

Type DCMC 85 °C High Capacitance, Screw Terminal, Aluminum

Highest Capacitance Screw Terminal Type

Cap. (µF)	Catalog Part Number	ESR Max. @ 25 °C 120 Hz (mΩ)	Ripple Max. @ 85°C 120 Hz (A)	Nominal Size D x L (inches)
160000	DCMC164U075FF2D	8.4	25.7	3 1/2 x 5 5/8
170000	DCMC174U075DN2D	7.7	28.1	3 x 7 5/8
170000	DCMC174U075FP2D	8.1	27.1	3 1/2 x 5 7/8
200000	DCMC204U075DG2B	6.8	29.8	3 x 8 5/8
230000	DCMC234U075FN2D	6.9	32.3	3 1/2 x 7 5/8
270000	DCMC274U075FG2D	6.2	35.2	3 1/2 x 8 5/8
100 Vdc (125 Vdc Surge)				
1900	DCMC192U100AK2B	98.4	2.9	1 3/8 x 1 5/8
3100	DCMC312U100AA2B	60.2	4.0	1 3/8 x 2 1/8
3900	DCMC392U100AH2B	51.0	4.7	1 3/8 x 2 5/8
5500	DCMC552U100AB2B	43.4	5.5	1 3/8 x 3 1/8
6000	DCMC602U100EA2B	62.0	4.8	1 3/4 x 2 1/8
6300	DCMC632U100BA2B	51.8	5.6	2 x 2 1/8
7000	DCMC702U100AJ2B	36.5	6.9	1 3/8 x 3 5/8
7100	DCMC712U100EH2B	52.8	6.0	1 3/4 x 2 5/8
8600	DCMC862U100AC2B	33.3	7.8	1 3/8 x 4 1/8
9000	DCMC902U100BH2B	37.8	5.9	2 x 2 5/8
9900	DCMC992U100EB2B	38.0	6.4	1 3/4 x 3 1/8
10000	DCMC103U100AD2B	31.1	7.5	1 3/8 x 4 5/8
12000	DCMC123U100AE2B	30.0	8.0	1 3/8 x 5 1/8
13000	DCMC133U100AF2B	29.0	8.6	1 3/8 x 5 5/8
13000	DCMC133U100EJ2B	29.9	8.8	1 3/4 x 3 5/8
13000	DCMC133U100BB2B	30.6	9.0	2 x 3 1/8
15000	DCMC153U100CH2B	33.7	8.9	2 1/2 x 2 5/8
16000	DCMC163U100EC2B	24.8	8.0	1 3/4 x 4 1/8
16000	DCMC163U100BJ2B	22.3	9.0	2 x 3 5/8
18000	DCMC183U100ED2B	21.2	9.8	1 3/4 x 4 5/8
20000	DCMC203U100BC2B	19.9	10.7	2 x 4 1/8
21000	DCMC213U100EE2B	18.7	11.5	1 3/4 x 5 1/8
21000	DCMC213U100CB2B	23.4	10.7	2 1/2 x 3 1/8
23000	DCMC233U100BD2B	17.7	12.8	2 x 4 5/8
24000	DCMC243U100EF2B	16.8	13.6	1 3/4 x 5 5/8
27000	DCMC273U100BE2B	15.6	12.4	2 x 5 1/8
27000	DCMC273U100CJ2B	19.1	11.9	2 1/2 x 3 5/8
31000	DCMC313U100BF2B	14.9	14.1	2 x 5 5/8
31000	DCMC313U100DB2B	19.9	12.8	3 x 3 1/8
33000	DCMC333U100CC2B	16.5	14.6	2 1/2 x 4 1/8
39000	DCMC393U100CD2B	14.7	16.0	2 1/2 x 4 5/8
40000	DCMC403U100DJ2B	16.4	15.6	3 x 3 5/8
45000	DCMC453U100CE2B	13.4	15.9	2 1/2 x 5 1/8
49000	DCMC493U100DC2B	14.4	16.1	3 x 4 1/8
51000	DCMC513U100CF2B	12.5	18.0	2 1/2 x 5 5/8
58000	DCMC583U100DD2B	13.0	18.3	3 x 4 5/8
67000	DCMC673U100DE2B	12.0	19.7	3 x 5 1/8
67000	DCMC673U100FC2D	13.4	19.2	3 1/2 x 4 1/8
76000	DCMC763U100DF2B	11.2	21.3	3 x 5 5/8
79000	DCMC793U100FD2D	12.1	23.1	3 1/2 x 4 5/8
80000	DCMC803U100DP2B	11.1	21.0	3 x 5 7/8

Cap. (µF)	Catalog Part Number	ESR Max. @ 25 °C 120 Hz (mΩ)	Ripple Max. @ 85°C 120 Hz (A)	Nominal Size D x L (inches)
92000	DCMC923U100FE2D	10.9	22.0	3 1/2 x 5 1/8
100000	DCMC104U100FF2D	10.2	23.4	3 1/2 x 5 5/8
110000	DCMC114U100DN2B	9.2	25.8	3 x 7 5/8
110000	DCMC114U100FP2D	10.0	24.3	3 1/2 x 5 7/8
130000	DCMC134U100DG2B	8.2	27.3	3 x 8 5/8
150000	DCMC154U100FN2D	8.3	29.5	3 1/2 x 7 5/8
180000	DCMC184U100FG2D	7.3	32.3	3 1/2 x 8 5/8
160 Vdc (200 Vdc Surge)				
1100	DCMC112T160AK2B	149.6	2.3	1 3/8 x 1 5/8
1800	DCMC182T160AA2B	93.0	3.3	1 3/8 x 2 1/8
2300	DCMC232T160AH2B	70.5	4.0	1 3/8 x 2 5/8
3200	DCMC322T160AB2B	58.5	4.7	1 3/8 x 3 1/8
3500	DCMC352T160EA2B	62.0	4.8	1 3/4 x 2 1/8
3700	DCMC372T160BA2B	70.5	4.8	2 x 2 1/8
4100	DCMC412T160AJ2B	50.2	5.9	1 3/8 x 3 5/8
4100	DCMC412T160EH2B	52.8	6.0	1 3/4 x 2 5/8
5000	DCMC502T160AC2B	42.9	6.9	1 3/8 x 4 1/8
5300	DCMC532T160BH2B	46.5	5.3	2 x 2 5/8
5800	DCMC582T160EB2B	38.0	6.4	1 3/4 x 3 1/8
5900	DCMC592T160AD2B	37.7	6.8	1 3/8 x 4 5/8
6800	DCMC682T160AE2B	34.7	7.5	1 3/8 x 5 1/8
7400	DCMC742T160EJ2B	29.9	8.4	1 3/4 x 3 5/8
7400	DCMC742T160BB2B	33.5	8.3	2 x 3 1/8
7700	DCMC772T160AF2B	32.2	8.8	1 3/8 x 5 5/8
8300	DCMC832T160CH2B	30.1	9.4	2 1/2 x 2 5/8
9100	DCMC912T160EC2B	24.8	8.0	1 3/4 x 4 1/8
9500	DCMC952T160BJ2B	26.4	8.3	2 x 3 5/8
11000	DCMC113T160ED2B	21.2	9.8	1 3/4 x 4 5/8
12000	DCMC123T160EE2B	18.7	11.0	1 3/4 x 5 1/8
12000	DCMC123T160BC2B	21.9	10.7	2 x 4 1/8
12000	DCMC123T160CB2B	21.3	11.2	2 1/2 x 3 1/8
14000	DCMC143T160EF2B	16.8	13.1	1 3/4 x 5 5/8
14000	DCMC143T160BD2B	18.8	12.8	2 x 4 5/8
15000	DCMC153T160CJ2B	17.0	11.9	2 1/2 x 3 5/8
16000	DCMC163T160BE2B	16.6	12.8	2 x 5 1/8
17000	DCMC173T160DB2B	14.7	14.3	3 x 3 1/8
18000	DCMC183T160BF2B	14.9	14.8	2 x 5 5/8
18000	DCMC183T160CC2B	14.1	15.8	2 1/2 x 4 1/8
22000	DCMC223T160CD2B	11.9	17.8	2 1/2 x 4 5/8
22000	DCMC223T160DJ2B	11.5	18.6	3 x 3 5/8
25000	DCMC253T160CE2B	10.7	17.8	2 1/2 x 5 1/8
27000	DCMC273T160DC2B	9.6	19.7	3 x 4 1/8
28000	DCMC283T160CF2B	9.6	20.5	2 1/2 x 5 5/8
32000	DCMC323T160DD2B	8.2	23.0	3 x 4 5/8
37000	DCMC373T160DE2B	7.3	25.3	3 x 5 1/8
37000	DCMC373T160FC2D	9.2	23.2	3 1/2 x 4 1/8
42000	DCMC423T160DF2B	6.5	27.9	3 x 5 5/8
44000	DCMC443T160FD2D	7.9	28.6	3 1/2 x 4 5/8

Type DCMC 85 °C High Capacitance, Screw Terminal, Aluminum

Highest Capacitance Screw Terminal Type

Cap. (µF)	Catalog Part Number	ESR Max. @ 25 °C 120 Hz (mΩ)	Ripple Max. @ 85°C 120 Hz (A)	Nominal Size D x L (inches)
45000	DCMC453T160DP2B	6.2	28.1	3 x 5 7/8
51000	DCMC513T160FE2D	6.9	27.5	3 1/2 x 5 1/8
58000	DCMC583T160FF2D	6.2	30.0	3 1/2 x 5 5/8
61000	DCMC613T160FP2D	5.9	31.6	3 1/2 x 5 7/8
62000	DCMC623T160DN2D	5.1	34.9	3 x 7 5/8
72000	DCMC723T160DG2D	4.3	37.5	3 x 8 5/8
85000	DCMC853T160FN2D	4.9	38.8	3 1/2 x 7 5/8
99000	DCMC993T160FG2D	4.2	42.8	3 1/2 x 8 5/8
200 Vdc (250 Vdc Surge)				
680	DCMC681T200AK2B	205.8	2.0	1 3/8 x 1 5/8
1000	DCMC102T200AA2B	140.3	2.6	1 3/8 x 2 1/8
1500	DCMC152T200AH2B	100.5	3.4	1 3/8 x 2 5/8
1800	DCMC182T200AB2B	78.5	4.1	1 3/8 x 3 1/8
1900	DCMC192T200EA2B	79.1	4.3	1 3/4 x 2 1/8
2200	DCMC222T200AJ2B	63.9	5.0	1 3/8 x 3 5/8
2400	DCMC242T200EH2B	62.5	5.3	1 3/4 x 2 5/8
2500	DCMC252T200BA2B	82.0	4.8	2 x 2 1/8
2700	DCMC272T200AC2B	51.7	6.2	1 3/8 x 4 1/8
3100	DCMC312T200EB2B	48.4	5.2	1 3/4 x 3 1/8
3300	DCMC332T200AD2B	43.2	6.0	1 3/8 x 4 5/8
3300	DCMC332T200BH2B	61.0	5.3	2 x 2 5/8
3800	DCMC382T200EJ2B	37.9	7.2	1 3/4 x 3 5/8
3900	DCMC392T200AE2B	37.8	7.5	1 3/8 x 5 1/8
4300	DCMC432T200BB2B	46.1	7.1	2 x 3 1/8
4500	DCMC452T200AF2B	33.4	8.6	1 3/8 x 5 5/8
4600	DCMC462T200EC2B	31.3	9.2	1 3/4 x 4 1/8
5400	DCMC542T200ED2B	26.8	7.7	1 3/4 x 4 5/8
5500	DCMC552T200CH2B	42.2	6.6	2 1/2 x 2 5/8
5600	DCMC562T200BJ2B	36.2	7.5	2 x 3 5/8
6100	DCMC612T200EE2B	23.5	9.9	1 3/4 x 5 1/8
6900	DCMC692T200EF2B	21.0	10.9	1 3/4 x 5 5/8
6900	DCMC692T200BC2B	28.5	9.7	2 x 4 1/8
7100	DCMC712T200CB2B	31.2	9.6	2 1/2 x 3 1/8
8200	DCMC822T200BD2B	24.4	11.2	2 x 4 5/8
9100	DCMC912T200BE2B	21.7	10.5	2 x 5 1/8
10000	DCMC103T200BF2B	19.6	11.7	2 x 5 5/8
10000	DCMC103T200CJ2B	22.3	11.6	2 1/2 x 3 5/8
11000	DCMC113T200CC2B	20.3	12.7	2 1/2 x 4 1/8
11000	DCMC113T200DB2B	30.3	10.8	3 x 3 1/8
12000	DCMC123T200CD2B	17.3	14.7	2 1/2 x 4 5/8
13000	DCMC133T200CE2B	15.8	15.9	2 1/2 x 5 1/8
13000	DCMC133T200DJ2B	23.7	12.0	3 x 3 5/8
15000	DCMC153T200CF2B	13.7	16.5	2 1/2 x 5 5/8
15000	DCMC153T200DC2B	19.7	14.3	3 x 4 1/8
18000	DCMC183T200DD2B	16.9	16.1	3 x 4 5/8
21000	DCMC213T200FC2B	17.1	16.5	3 1/2 x 4 1/8
22000	DCMC223T200DE2B	14.8	18.2	3 x 5 1/8
24000	DCMC243T200DF2B	13.3	19.5	3 x 5 5/8

Cap. (µF)	Catalog Part Number	ESR Max. @ 25 °C 120 Hz (mΩ)	Ripple Max. @ 85°C 120 Hz (A)	Nominal Size D x L (inches)
25000	DCMC253T200FD2B	15.3	20.5	3 1/2 x 4 5/8
26000	DCMC263T200DP2B	12.7	19.7	3 x 5 7/8
28000	DCMC283T200FE2B	13.4	19.8	3 1/2 x 5 1/8
31000	DCMC313T200FF2B	12.0	21.6	3 1/2 x 5 5/8
33000	DCMC333T200DN2B	10.8	23.7	3 x 7 5/8
33000	DCMC333T200FP2D	11.5	22.7	3 1/2 x 5 7/8
37000	DCMC373T200DG2B	9.6	25.2	3 x 8 5/8
44000	DCMC443T200FN2D	9.3	28.2	3 1/2 x 7 5/8
51000	DCMC513T200FG2D	7.9	31.1	3 1/2 x 8 5/8
250 Vdc (300 Vdc Surge)				
470	DCMC471T250AK2B	259.7	1.8	1 3/8 x 1 5/8
820	DCMC821T250AA2B	156.4	2.5	1 3/8 x 2 1/8
1200	DCMC122T250AH2B	118.7	3.1	1 3/8 x 2 5/8
1400	DCMC142T250EA2B	99.0	3.6	1 3/4 x 2 1/8
1500	DCMC152T250AB2B	88.0	4.1	1 3/8 x 3 1/8
1800	DCMC182T250EH2B	83.3	4.4	1 3/4 x 2 5/8
1800	DCMC182T250BA2B	94.7	4.3	2 x 2 1/8
1900	DCMC192T250AJ2B	69.5	5.2	1 3/8 x 3 5/8
2300	DCMC232T250AC2B	57.9	5.9	1 3/8 x 4 1/8
2300	DCMC232T250EB2B	61.3	4.6	1 3/4 x 3 1/8
2400	DCMC242T250AD2B	51.4	5.5	1 3/8 x 4 5/8
2500	DCMC252T250BH2B	65.7	5.2	2 x 2 5/8
2700	DCMC272T250AE2B	44.0	6.6	1 3/8 x 5 1/8
3000	DCMC302T250EJ2B	48.7	6.6	1 3/4 x 3 5/8
3300	DCMC332T250BB2B	46.2	7.1	2 x 3 1/8
3400	DCMC342T250AF2B	38.3	8.0	1 3/8 x 5 5/8
3700	DCMC372T250EC2B	40.5	8.1	1 3/4 x 4 1/8
3900	DCMC392T250ED2B	34.8	6.7	1 3/4 x 4 5/8
3900	DCMC392T250BJ2B	38.2	6.9	2 x 3 5/8
4100	DCMC412T250CH2B	51.8	6.3	2 1/2 x 2 5/8
4500	DCMC452T250EE2B	30.6	8.6	1 3/4 x 5 1/8
4700	DCMC472T250BC2B	31.5	8.9	2 x 4 1/8
5000	DCMC502T250EF2B	27.3	9.9	1 3/4 x 5 5/8
5200	DCMC522T250CB2B	32.1	9.5	2 1/2 x 3 1/8
5600	DCMC562T250BD2B	26.9	10.7	2 x 4 5/8
6200	DCMC622T250BE2B	23.6	10.1	2 x 5 1/8
6400	DCMC642T250CJ2B	25.1	10.4	2 1/2 x 3 5/8
6800	DCMC682T250BF2B	21.2	11.9	2 x 5 5/8
7800	DCMC782T250DB2B	27.6	10.9	3 x 3 1/8
8200	DCMC822T250CC2B	20.8	13.0	2 1/2 x 4 1/8
10000	DCMC103T250CD2B	17.8	14.5	2 1/2 x 4 5/8
10000	DCMC103T250DJ2B	21.6	13.6	3 x 3 5/8
11000	DCMC113T250CE2B	15.5	14.8	2 1/2 x 5 1/8
12000	DCMC123T250CF2B	13.8	16.5	2 1/2 x 5 5/8
12000	DCMC123T250DC2B	17.6	15.2	3 x 4 1/8
13000	DCMC133T250DD2B	16.3	16.4	3 x 4 5/8
15000	DCMC153T250DE2B	14.3	18.0	3 x 5 1/8
16000	DCMC163T250FC2D	19.5	15.9	3 1/2 x 4 1/8

Type DCMC 85 °C High Capacitance, Screw Terminal, Aluminum

Highest Capacitance Screw Terminal Type

Cap. (µF)	Catalog Part Number	ESR Max. @ 25 °C 120 Hz (mΩ)	Ripple Max. @ 85°C 120 Hz (A)	Nominal Size D x L (inches)
18000	DCMC183T250DF2B	12.0	20.6	3 x 5 5/8
18000	DCMC183T250FD2D	17.1	19.4	3 1/2 x 4 5/8
19000	DCMC193T250DP2B	11.5	20.6	3 x 5 7/8
21000	DCMC213T250FE2D	15.1	18.7	3 1/2 x 5 1/8
23000	DCMC233T250FF2D	13.4	20.4	3 1/2 x 5 5/8
24000	DCMC243T250FP2D	12.9	21.4	3 1/2 x 5 7/8
27000	DCMC273T250DN2D	9.5	27.2	3 x 7 5/8
30000	DCMC303T250DG2B	7.0	29.6	3 x 8 5/8
33000	DCMC333T250FN2D	10.6	26.2	3 1/2 x 7 5/8
38000	DCMC383T250FG2D	9.2	28.8	3 1/2 x 8 5/8
300 Vdc (350 Vdc Surge)				
330	DCMC331T300AK2B	418.1	1.4	1 3/8 x 1 5/8
600	DCMC601T300AA2B	231.4	2.1	1 3/8 x 2 1/8
730	DCMC731T300AH2B	188.8	2.5	1 3/8 x 2 5/8
1000	DCMC102T300AB2B	137.5	3.1	1 3/8 x 3 1/8
1000	DCMC102T300EA2B	139.3	3.2	1 3/4 x 2 1/8
1200	DCMC122T300EH2B	117.2	3.7	1 3/4 x 2 5/8
1200	DCMC122T300BA2B	131.1	3.6	2 x 2 1/8
1300	DCMC132T300AJ2B	106.8	4.2	1 3/8 x 3 5/8
1500	DCMC152T300AC2B	90.4	4.7	1 3/8 x 4 1/8
1500	DCMC152T300BH2B	102.6	3.6	2 x 2 5/8
1700	DCMC172T300EB2B	84.5	4.3	1 3/4 x 3 1/8
1800	DCMC182T300AD2B	77.4	4.7	1 3/8 x 4 5/8
2100	DCMC212T300AE2B	65.7	5.4	1 3/8 x 5 1/8
2100	DCMC212T300EJ2B	68.3	5.6	1 3/4 x 3 5/8
2200	DCMC222T300BB2B	71.1	5.7	2 x 3 1/8
2300	DCMC232T300AF2B	60.3	6.4	1 3/8 x 5 5/8
2600	DCMC262T300EC2B	56.7	6.8	1 3/4 x 4 1/8
2600	DCMC262T300CH2B	60.5	5.1	2 1/2 x 2 5/8
2800	DCMC282T300BJ2B	55.5	5.7	2 x 3 5/8
3000	DCMC302T300ED2B	48.5	6.5	1 3/4 x 4 5/8
3300	DCMC332T300CB2B	46.5	7.0	2 1/2 x 3 1/8
3400	DCMC342T300BC2B	45.7	7.4	2 x 4 1/8
3500	DCMC352T300EE2B	42.5	8.0	1 3/4 x 5 1/8
3900	DCMC392T300EF2B	37.9	8.7	1 3/4 x 5 5/8
4000	DCMC402T300BD2B	38.9	8.9	2 x 4 5/8
4200	DCMC422T300CJ2B	38.1	7.9	2 1/2 x 3 5/8
4600	DCMC462T300BE2B	34.0	8.9	2 x 5 1/8
4800	DCMC482T300DB2B	42.8	8.4	3 x 3 1/8
5200	DCMC522T300CC2B	29.9	10.4	2 1/2 x 4 1/8
5300	DCMC532T300BF2B	30.2	10.8	2 x 5 5/8
6000	DCMC602T300DJ2B	34.0	10.5	3 x 3 5/8
6100	DCMC612T300CD2B	25.5	12.5	2 1/2 x 4 5/8
7100	DCMC712T300CE2B	22.2	12.3	2 1/2 x 5 1/8
7400	DCMC742T300DC2B	26.2	11.9	3 x 4 1/8
8000	DCMC802T300CF2B	19.8	14.3	2 1/2 x 5 5/8
8700	DCMC872T300DD2B	23.6	13.6	3 x 4 5/8
10000	DCMC103T300DE2B	20.5	15.1	3 x 5 1/8

Cap. (µF)	Catalog Part Number	ESR Max. @ 25 °C 120 Hz (mΩ)	Ripple Max. @ 85°C 120 Hz (A)	Nominal Size D x L (inches)
10000	DCMC103T300FC2D	21.0	15.3	3 1/2 x 4 1/8
11000	DCMC113T300DF2B	18.0	16.8	3 x 5 5/8
12000	DCMC123T300DP2B	17.0	19.5	3 x 5 7/8
12000	DCMC123T300FD2D	18.2	16.4	3 1/2 x 4 5/8
13000	DCMC133T300FE2D	16.0	18.1	3 1/2 x 5 1/8
15000	DCMC153T300FF2D	14.3	19.8	3 1/2 x 5 5/8
16000	DCMC163T300DN2B	13.2	21.8	3 x 7 5/8
16000	DCMC163T300FP2D	13.5	20.9	3 1/2 x 5 7/8
19000	DCMC193T300DG2B	10.8	23.7	3 x 8 5/8
22000	DCMC223T300FN2D	11.0	25.9	3 1/2 x 7 5/8
26000	DCMC263T300FG2D	9.3	28.6	3 1/2 x 8 5/8
350 Vdc (400 Vdc Surge)				
220	DCMC221T350AK2B	605.4	1.2	1 3/8 x 1 5/8
430	DCMC431T350AA2B	378.8	1.6	1 3/8 x 2 1/8
510	DCMC511T350AH2B	253.0	2.1	1 3/8 x 2 5/8
680	DCMC681T350AB2B	190.2	2.6	1 3/8 x 3 1/8
760	DCMC761T350EA2B	176.6	2.9	1 3/4 x 2 1/8
860	DCMC861T350AJ2B	152.5	3.2	1 3/8 x 3 5/8
920	DCMC921T350EH2B	161.7	3.3	1 3/4 x 2 5/8
990	DCMC991T350BA2B	167.6	3.3	2 x 2 1/8
1000	DCMC102T350AC2B	127.5	4.0	1 3/8 x 4 1/8
1200	DCMC122T350AD2B	109.6	3.5	1 3/8 x 4 5/8
1200	DCMC122T350EB2B	124.7	3.5	1 3/4 x 3 1/8
1200	DCMC122T350BH2B	132.2	3.6	2 x 2 5/8
1300	DCMC132T350AE2B	97.2	4.5	1 3/8 x 5 1/8
1500	DCMC152T350AF2B	85.9	5.0	1 3/8 x 5 5/8
1500	DCMC152T350EJ2B	97.3	4.9	1 3/4 x 3 5/8
1500	DCMC152T350BB2B	101.5	4.9	2 x 3 1/8
1800	DCMC182T350EC2B	79.9	5.8	1 3/4 x 4 1/8
1900	DCMC192T350BJ2B	79.2	4.4	2 x 3 5/8
2000	DCMC202T350CH2B	86.9	4.6	2 1/2 x 2 5/8
2100	DCMC212T350ED2B	67.8	5.5	1 3/4 x 4 5/8
2300	DCMC232T350BC2B	65.1	5.9	2 x 4 1/8
2400	DCMC242T350EE2B	59.1	6.5	1 3/4 x 5 1/8
2500	DCMC252T350CB2B	61.0	6.6	2 1/2 x 3 1/8
2700	DCMC272T350EF2B	52.4	7.4	1 3/4 x 5 5/8
2700	DCMC272T350BD2B	55.4	7.5	2 x 4 5/8
3100	DCMC312T350BE2B	48.7	7.0	2 x 5 1/8
3100	DCMC312T350CJ2B	48.5	7.5	2 1/2 x 3 5/8
3500	DCMC352T350BF2B	42.8	8.3	2 x 5 5/8
3700	DCMC372T350CC2B	39.9	9.0	2 1/2 x 4 1/8
3800	DCMC382T350DB2B	54.0	8.1	3 x 3 1/8
4200	DCMC422T350CD2B	34.0	10.5	2 1/2 x 4 5/8
4600	DCMC462T350DJ2B	41.7	9.8	3 x 3 5/8
4800	DCMC482T350CE2B	29.6	10.7	2 1/2 x 5 1/8
5400	DCMC542T350CF2B	26.2	11.9	2 1/2 x 5 5/8
5500	DCMC552T350DC2B	34.7	10.8	3 x 4 1/8
6300	DCMC632T350DD2B	29.6	12.2	3 x 4 5/8

Type DCMC 85 °C High Capacitance, Screw Terminal, Aluminum

Highest Capacitance Screw Terminal Type

Cap. (µF)	Catalog Part Number	ESR Max. @ 25 °C 120 Hz (mΩ)	Ripple Max. @ 85°C 120 Hz (A)	Nominal Size D x L (inches)
7200	DCMC722T350DE2B	25.8	13.4	3 x 5 1/8
7700	DCMC772T350FC2D	29.9	12.8	3 1/2 x 4 1/8
8200	DCMC822T350DF2B	22.9	14.9	3 x 5 5/8
8400	DCMC842T350DP2B	21.7	17.2	3 x 5 7/8
8800	DCMC882T350FD2D	25.7	13.8	3 1/2 x 4 5/8
10000	DCMC103T350FE2D	22.5	15.3	3 1/2 x 5 1/8
11000	DCMC113T350DN2B	17.1	19.1	3 x 7 5/8
11000	DCMC113T350FF2D	20.0	16.7	3 1/2 x 5 5/8
12000	DCMC123T350FP2D	18.9	17.7	3 1/2 x 5 7/8
13000	DCMC133T350DG2B	14.2	20.7	3 x 8 5/8
16000	DCMC163T350FN2D	14.9	22.3	3 1/2 x 7 5/8
18000	DCMC183T350FG2D	12.4	24.8	3 1/2 x 8 5/8
400 Vdc (450 Vdc Surge)				
180	DCMC181T400AK2B	652.4	1.1	1 3/8 x 1 5/8
350	DCMC351T400AA2B	408.2	1.6	1 3/8 x 2 1/8
420	DCMC421T400AH2B	272.6	2.1	1 3/8 x 2 5/8
570	DCMC571T400AB2B	204.8	2.5	1 3/8 x 3 1/8
630	DCMC631T400EA2B	189.5	2.8	1 3/4 x 2 1/8
710	DCMC711T400AJ2B	164.3	3.1	1 3/8 x 3 5/8
760	DCMC761T400EH2B	173.7	3.2	1 3/4 x 2 5/8
820	DCMC821T400BA2B	179.3	3.2	2 x 2 1/8
850	DCMC851T400AC2B	137.3	3.8	1 3/8 x 4 1/8
1000	DCMC102T400AD2B	118.0	3.4	1 3/8 x 4 5/8
1000	DCMC102T400EB2B	134.0	3.4	1 3/4 x 3 1/8
1000	DCMC102T400BH2B	141.7	3.5	2 x 2 5/8
1100	DCMC112T400AE2B	104.6	4.3	1 3/8 x 5 1/8
1200	DCMC122T400AF2B	92.4	4.8	1 3/8 x 5 5/8
1200	DCMC122T400EJ2B	106.6	4.6	1 3/4 x 3 5/8
1300	DCMC132T400BB2B	108.9	4.8	2 x 3 1/8
1500	DCMC152T400EC2B	85.8	5.6	1 3/4 x 4 1/8
1600	DCMC162T400BJ2B	85.0	4.3	2 x 3 5/8
1700	DCMC172T400ED2B	74.3	4.9	1 3/4 x 4 5/8
1700	DCMC172T400CH2B	93.1	4.7	2 1/2 x 2 5/8
1900	DCMC192T400BC2B	69.8	5.7	2 x 4 1/8
2000	DCMC202T400EE2B	63.4	6.3	1 3/4 x 5 1/8
2100	DCMC212T400CB2B	65.3	6.4	2 1/2 x 3 1/8
2200	DCMC222T400EF2B	57.3	7.1	1 3/4 x 5 5/8
2300	DCMC232T400BD2B	59.3	7.2	2 x 4 5/8
2600	DCMC262T400BE2B	52.2	6.8	2 x 5 1/8
2600	DCMC262T400CJ2B	52.0	7.2	2 1/2 x 3 5/8
2900	DCMC292T400BF2B	45.9	8.1	2 x 5 5/8
3100	DCMC312T400CC2B	42.8	8.7	2 1/2 x 4 1/8
3200	DCMC322T400DB2B	57.5	7.8	3 x 3 1/8
3900	DCMC392T400CD2B	35.6	10.3	2 1/2 x 4 5/8
3900	DCMC392T400DJ2B	44.9	9.4	3 x 3 5/8
4000	DCMC402T400CE2B	31.7	10.3	2 1/2 x 5 1/8
4700	DCMC472T400CF2B	28.1	11.5	2 1/2 x 5 5/8
4700	DCMC472T400DC2B	37.0	10.5	3 x 4 1/8

Cap. (µF)	Catalog Part Number	ESR Max. @ 25 °C 120 Hz (mΩ)	Ripple Max. @ 85°C 120 Hz (A)	Nominal Size D x L (inches)
5300	DCMC532T400DD2B	31.5	11.8	3 x 4 5/8
6000	DCMC602T400DE2B	27.4	13.0	3 x 5 1/8
6400	DCMC642T400FC2D	31.9	12.4	3 1/2 x 4 1/8
6800	DCMC682T400DF2B	24.4	14.4	3 x 5 5/8
7100	DCMC712T400DP2B	23.1	16.7	3 x 5 7/8
7400	DCMC742T400FD2D	27.4	13.4	3 1/2 x 4 5/8
8400	DCMC842T400FE2D	23.9	14.8	3 1/2 x 5 1/8
9400	DCMC942T400FF2D	21.2	16.2	3 1/2 x 5 5/8
9600	DCMC962T400DN2B	18.2	18.6	3 x 7 5/8
9900	DCMC992T400FP2D	20.1	17.2	3 1/2 x 5 7/8
11000	DCMC113T400DG2B	15.1	20.1	3 x 8 5/8
13000	DCMC133T400FN2D	15.8	21.7	3 1/2 x 7 5/8
15000	DCMC153T400FG2D	13.1	24.1	3 1/2 x 8 5/8
450 Vdc (500 Vdc Surge)				
150	DCMC151T450AK2B	796.7	1.0	1 3/8 x 1 5/8
270	DCMC271T450AA2B	437.7	1.5	1 3/8 x 2 1/8
350	DCMC351T450AH2B	337.1	1.8	1 3/8 x 2 5/8
460	DCMC461T450EA2B	264.2	2.2	1 3/4 x 2 1/8
470	DCMC471T450AB2B	253.2	2.4	1 3/8 x 3 1/8
560	DCMC561T450AJ2B	203.0	2.8	1 3/8 x 3 5/8
570	DCMC571T450EH2B	213.1	2.9	1 3/4 x 2 5/8
590	DCMC591T450BA2B	228.4	2.9	2 x 2 1/8
680	DCMC681T450AC2B	169.5	3.4	1 3/8 x 4 1/8
740	DCMC741T450EB2B	164.5	2.8	1 3/4 x 3 1/8
780	DCMC781T450BH2B	178.0	2.9	2 x 2 5/8
820	DCMC821T450AD2B	145.6	3.5	1 3/8 x 4 5/8
920	DCMC921T450EJ2B	130.9	3.8	1 3/4 x 3 5/8
930	DCMC931T450AE2B	127.7	4.1	1 3/8 x 5 1/8
1000	DCMC102T450AF2B	113.9	4.5	1 3/8 x 5 5/8
1000	DCMC102T450BB2B	137.0	4.3	2 x 3 1/8
1100	DCMC112T450EC2B	107.4	5.0	1 3/4 x 4 1/8
1200	DCMC122T450BJ2B	109.0	3.8	2 x 3 5/8
1200	DCMC122T450CH2B	115.8	4.0	2 1/2 x 2 5/8
1300	DCMC132T450ED2B	91.1	4.7	1 3/4 x 4 5/8
1500	DCMC152T450EE2B	79.2	5.4	1 3/4 x 5 1/8
1500	DCMC152T450BC2B	89.5	5.3	2 x 4 1/8
1700	DCMC172T450EF2B	70.2	6.2	1 3/4 x 5 5/8
1700	DCMC172T450CB2B	81.1	6.0	2 1/2 x 3 1/8
1800	DCMC182T450BD2B	76.0	6.4	2 x 4 5/8
1900	DCMC192T450BE2B	66.8	6.0	2 x 5 1/8
2000	DCMC202T450CJ2B	66.5	6.4	2 1/2 x 3 5/8
2200	DCMC222T450BF2B	58.6	7.1	2 x 5 5/8
2400	DCMC242T450CC2B	54.7	7.7	2 1/2 x 4 1/8
2500	DCMC252T450DB2B	65.7	7.3	3 x 3 1/8
2800	DCMC282T450CD2B	46.4	9.0	2 1/2 x 4 5/8
3000	DCMC302T450DJ2B	52.2	8.7	3 x 3 5/8
3300	DCMC332T450CE2B	40.4	9.2	2 1/2 x 5 1/8
3900	DCMC392T450CF2B	35.4	10.3	2 1/2 x 5 5/8

Type DCMC 85 °C High Capacitance, Screw Terminal, Aluminum

Highest Capacitance Screw Terminal Type

Cap. (µF)	Catalog Part Number	ESR Max. @ 25 °C 120 Hz (mΩ)	Ripple Max. @ 85°C 120 Hz (A)	Nominal Size D x L (inches)
3900	DCMC392T450DC2B	40.1	10.1	3 x 4 1/8
4100	DCMC412T450DD2B	37.5	10.8	3 x 4 5/8
4700	DCMC472T450DE2B	32.5	12.0	3 x 5 1/8
5000	DCMC502T450FC2D	31.8	12.5	3 1/2 x 4 1/8
5600	DCMC562T450DF2B	28.8	13.3	3 x 5 5/8
5800	DCMC582T450DP2B	27.3	15.4	3 x 5 7/8
5800	DCMC582T450FD2D	27.0	13.5	3 1/2 x 4 5/8
6800	DCMC682T450FE2D	23.5	15.0	3 1/2 x 5 1/8
7300	DCMC732T450FF2D	21.1	16.3	3 1/2 x 5 5/8
7700	DCMC772T450FP2D	20.0	17.2	3 1/2 x 5 7/8
7900	DCMC792T450DN2B	21.3	17.1	3 x 7 5/8
9000	DCMC902T450DG2B	17.6	18.6	3 x 8 5/8
10000	DCMC103T450FN2D	15.9	21.6	3 1/2 x 7 5/8
12000	DCMC123T450FG2D	13.3	24.0	3 1/2 x 8 5/8
500 Vdc (550 Vdc Surge)				
110	DCMC111T500AK2B	1224.3	0.8	1 3/8 x 1 5/8
180	DCMC181T500AA2B	736.9	1.2	1 3/8 x 2 1/8
240	DCMC241T500AH2B	556.5	1.4	1 3/8 x 2 5/8
270	DCMC271T500EA2B	498.4	1.6	1 3/4 x 2 1/8
320	DCMC321T500AB2B	409.7	1.9	1 3/8 x 3 1/8
340	DCMC341T500BA2B	393.1	2.0	2 x 2 1/8
380	DCMC381T500EH2B	347.2	2.2	1 3/4 x 2 5/8
400	DCMC401T500AJ2B	338.1	2.4	1 3/8 x 3 5/8
470	DCMC471T500BH2B	273.9	2.7	2 x 2 5/8
480	DCMC481T500AC2B	293.2	2.1	1 3/8 x 4 1/8
500	DCMC501T500EB2B	264.5	2.4	1 3/4 x 3 1/8
560	DCMC561T500AD2B	261.2	2.6	1 3/8 x 4 5/8
640	DCMC641T500AE2B	231.1	2.9	1 3/8 x 5 1/8
650	DCMC651T500EJ2B	202.0	3.2	1 3/4 x 3 5/8
700	DCMC701T500BB2B	200.1	3.4	2 x 3 1/8
720	DCMC721T500AF2B	195.4	3.6	1 3/8 x 5 5/8
790	DCMC791T500EC2B	172.4	3.9	1 3/4 x 4 1/8
800	DCMC801T500CH2B	170.6	3.0	2 1/2 x 2 5/8
860	DCMC861T500BJ2B	159.1	3.4	2 x 3 5/8
930	DCMC931T500ED2B	149.1	3.7	1 3/4 x 4 5/8
1000	DCMC102T500BC2B	138.7	4.1	2 x 4 1/8
1100	DCMC112T500EE2B	129.6	4.4	1 3/4 x 5 1/8

Cap. (µF)	Catalog Part Number	ESR Max. @ 25 °C 120 Hz (mΩ)	Ripple Max. @ 85°C 120 Hz (A)	Nominal Size D x L (inches)
1100	DCMC112T500CB2B	122.0	4.7	2 1/2 x 3 1/8
1200	DCMC122T500EF2B	114.7	5.0	1 3/4 x 5 5/8
1200	DCMC122T500BD2B	117.7	5.1	2 x 4 5/8
1400	DCMC142T500BE2B	102.3	4.8	2 x 5 1/8
1400	DCMC142T500CJ2B	95.1	5.3	2 1/2 x 3 5/8
1500	DCMC152T500BF2B	93.3	5.7	2 x 5 5/8
1700	DCMC172T500CC2B	79.7	6.4	2 1/2 x 4 1/8
1700	DCMC172T500DB2B	86.4	6.4	3 x 3 1/8
2100	DCMC212T500CE2B	61.1	7.8	2 1/2 x 5 1/8
2200	DCMC222T500CD2B	68.3	7.6	2 1/2 x 4 5/8
2200	DCMC222T500DJ2B	67.4	7.1	3 x 3 5/8
2500	DCMC252T500CF2B	54.7	8.3	2 1/2 x 5 5/8
2500	DCMC252T500DC2B	55.4	8.6	3 x 4 1/8
3000	DCMC302T500DD2B	48.1	9.5	3 x 4 5/8
3400	DCMC342T500DE2B	43.1	10.4	3 x 5 1/8
3500	DCMC352T500FC2D	40.1	11.1	3 1/2 x 4 1/8
3900	DCMC392T500DF2B	37.5	11.6	3 x 5 5/8
4100	DCMC412T500DP2B	35.5	13.5	3 x 5 7/8
4100	DCMC412T500FD2D	34.1	12.0	3 1/2 x 4 5/8
4800	DCMC482T500FE2D	30.0	13.2	3 1/2 x 5 1/8
5400	DCMC542T500FF2D	28.0	14.2	3 1/2 x 5 5/8
5700	DCMC572T500FP2D	26.0	15.1	3 1/2 x 5 7/8
5700	DCMC572T500DN2B	27.9	15.0	3 x 7 5/8
6600	DCMC662T500DG2B	23.1	16.2	3 x 8 5/8
7900	DCMC792T500FN2D	20.5	19.1	3 1/2 x 7 5/8
9200	DCMC922T500FG2D	16.7	21.4	3 1/2 x 8 5/8
550 Vdc (600 Vdc Surge)				
1400	DCMC142T550CC2B	170.5	4.9	2 1/2 x 4 1/8
1700	DCMC172T550CD2B	132.6	5.9	2 1/2 x 4 5/8
1900	DCMC192T550CE2B	111.7	6.8	2 1/2 x 5 1/8
2200	DCMC222T550DC2B	90.4	7.8	3 x 4 1/8
2300	DCMC232T550CF2B	86.5	7.8	2 1/2 x 5 5/8
2500	DCMC252T550DD2B	79.6	8.4	3 x 4 5/8
2900	DCMC292T550DE2B	64.0	9.7	3 x 5 1/8
3400	DCMC342T550DF2B	54.6	10.9	3 x 5 5/8
3700	DCMC372T550DP2B	50.2	12.2	3 x 5 7/8
5100	DCMC512T550DN2B	36.4	16.2	3 x 7 5/8

Type DCMC 85 °C High Capacitance, Screw Terminal, Aluminum

Highest Capacitance Screw Terminal Type

Typical Performance Curves

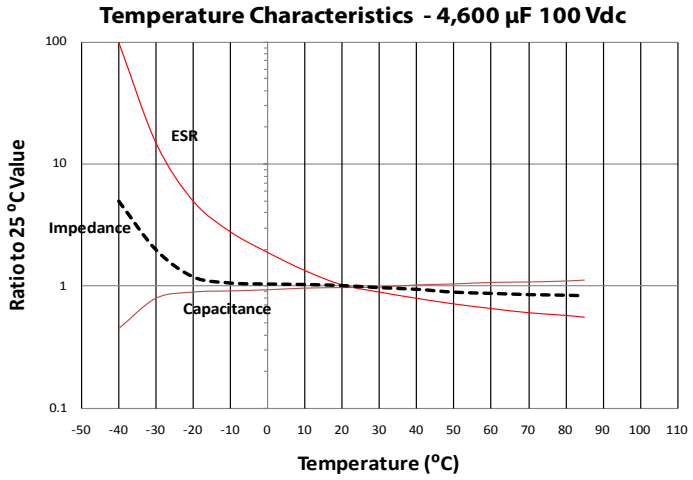

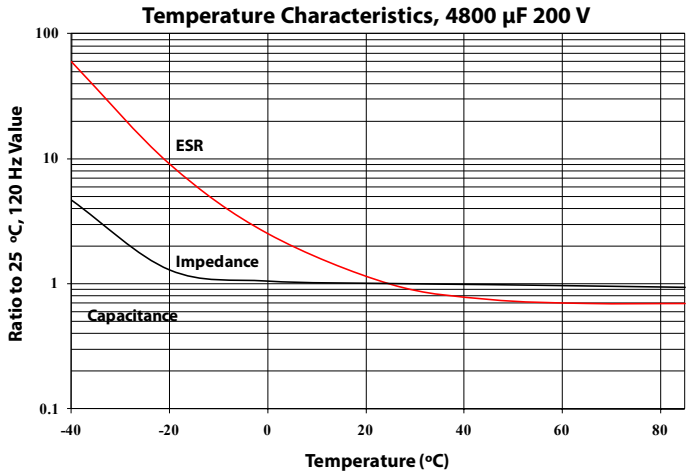

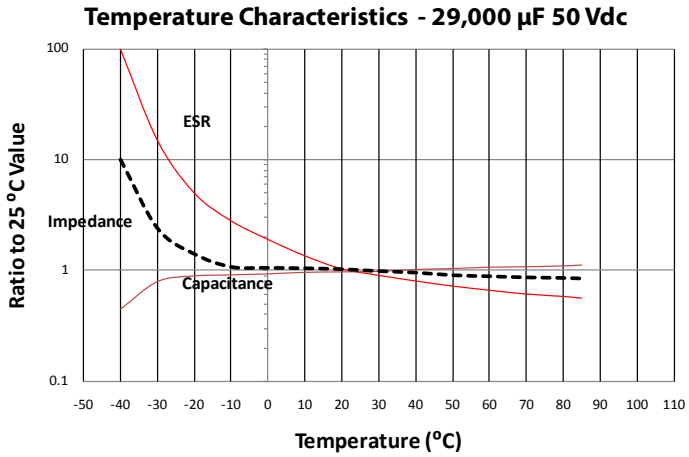

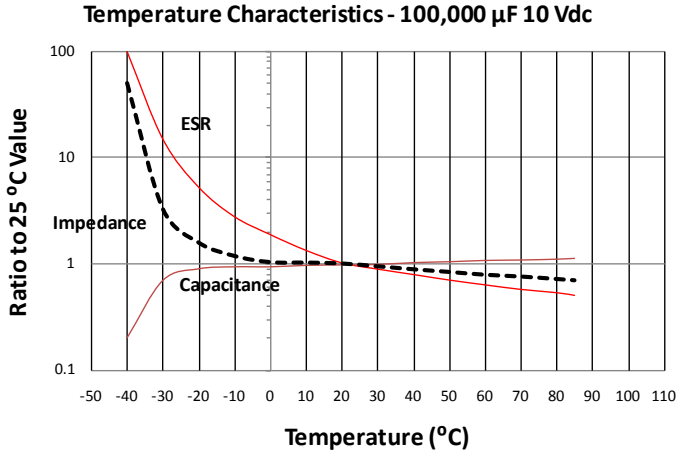

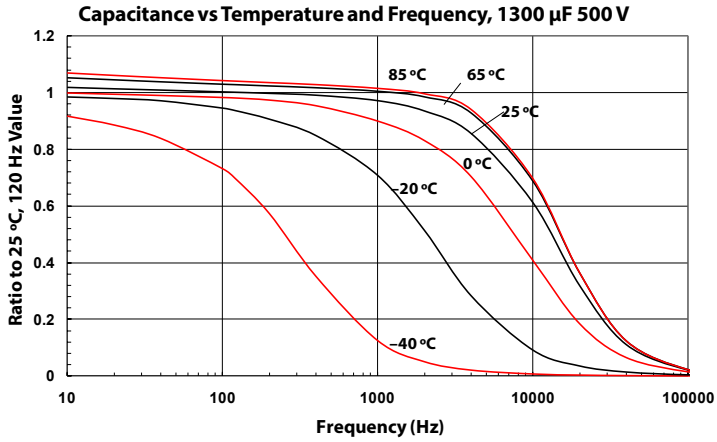

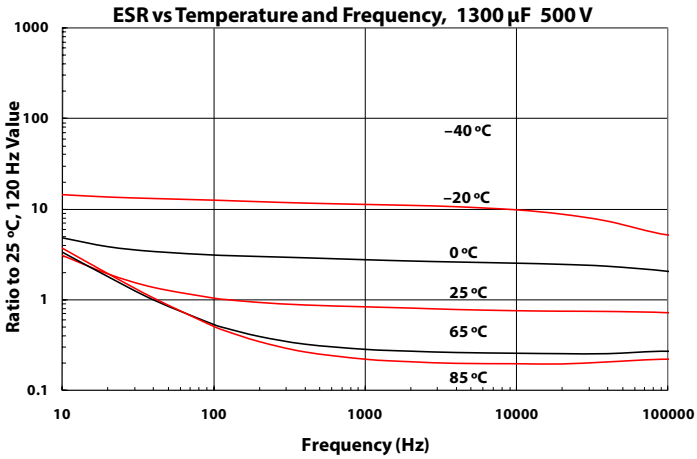

Type DCMC 85 °C High Capacitance, Screw Terminal, Aluminum

Highest Capacitance Screw Terminal Type

Typical Performance Curves

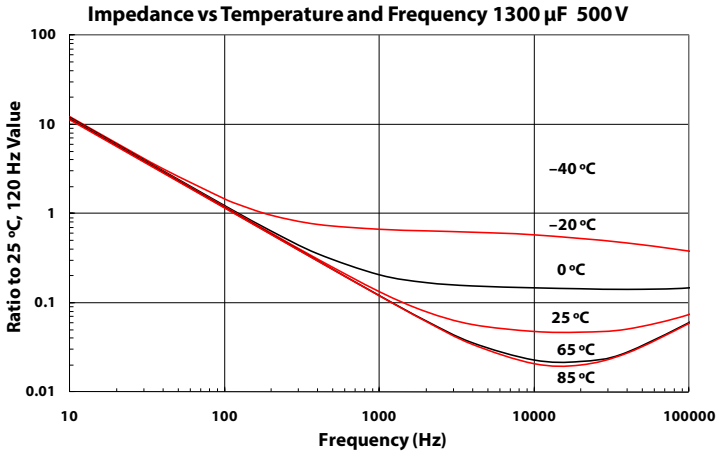

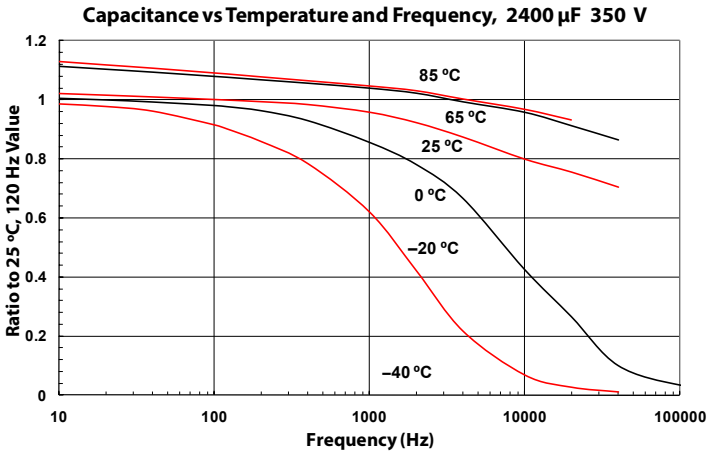

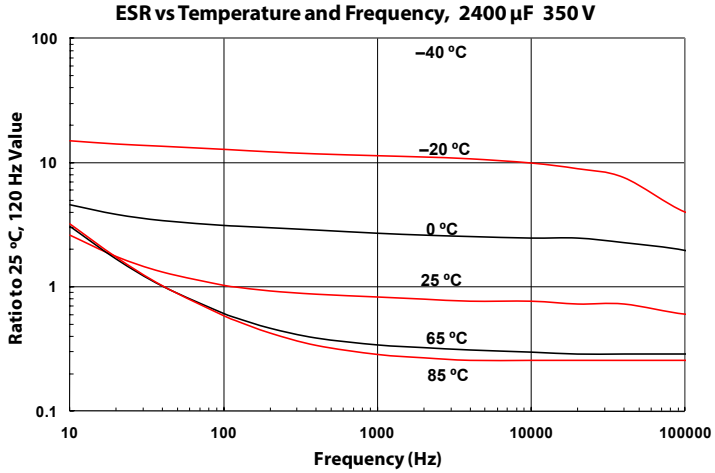

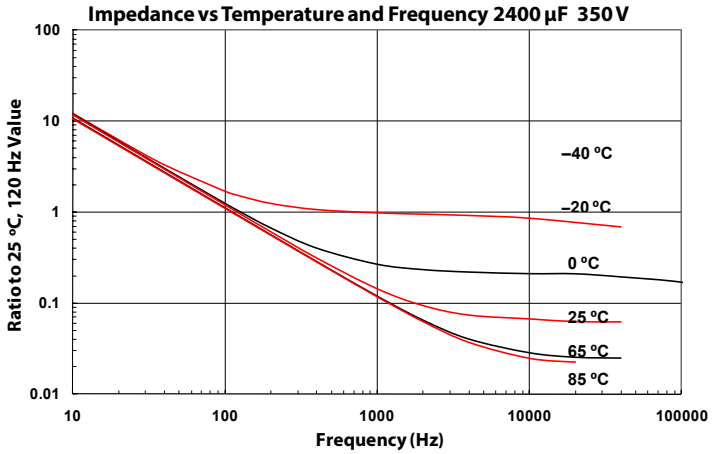

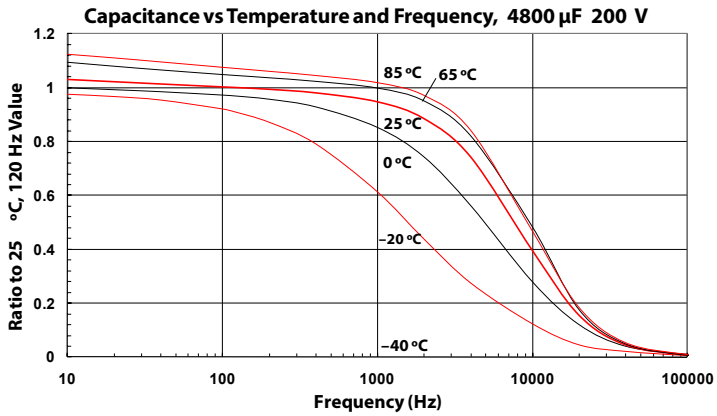

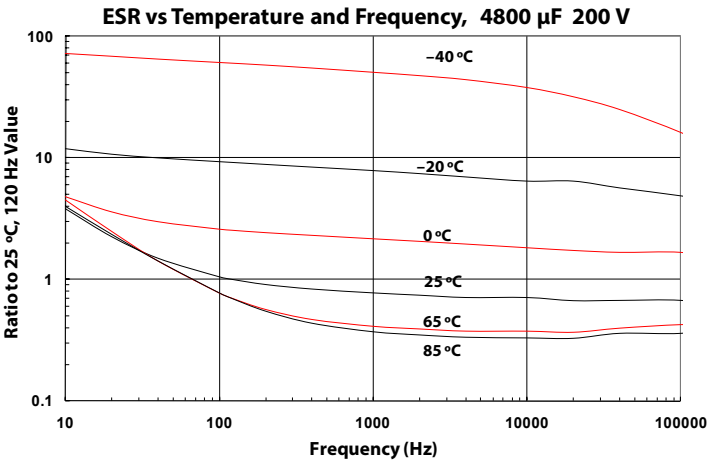

Type DCMC 85 °C High Capacitance, Screw Terminal, Aluminum

Highest Capacitance Screw Terminal Type

Typical Performance Curves

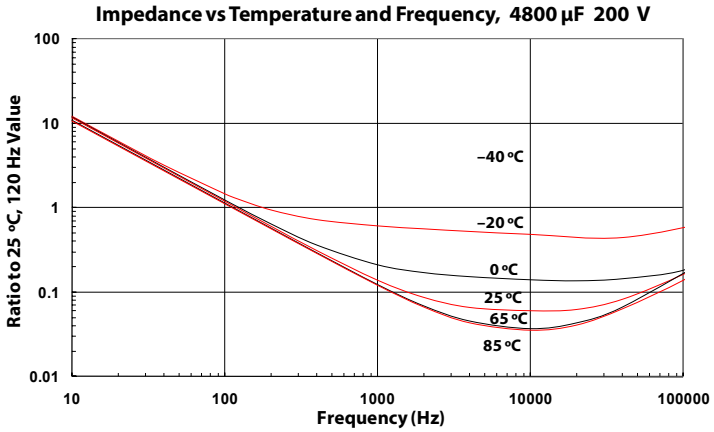

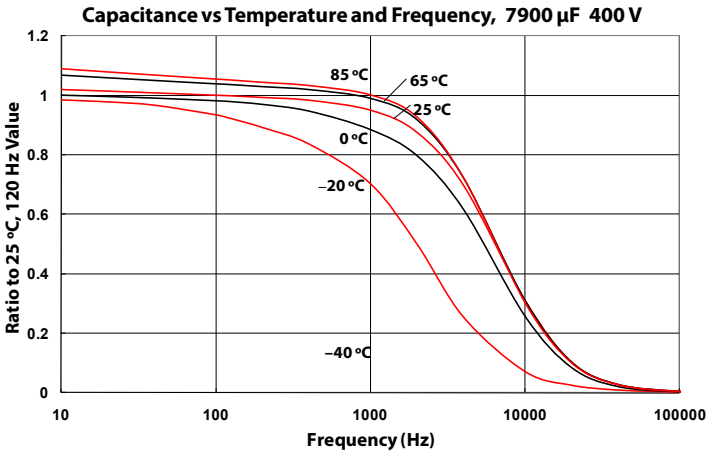

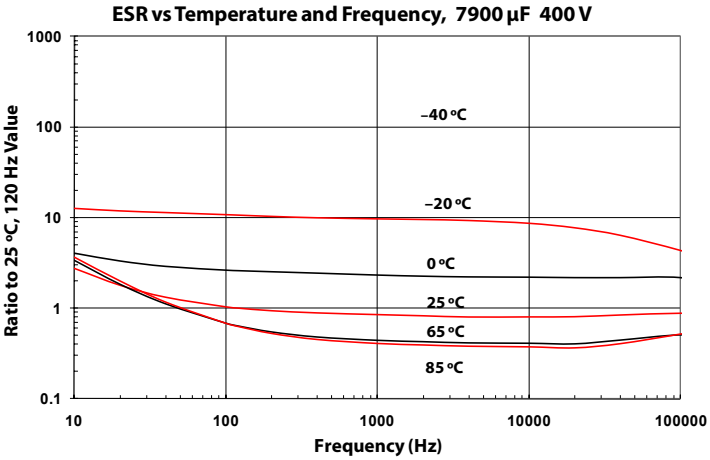

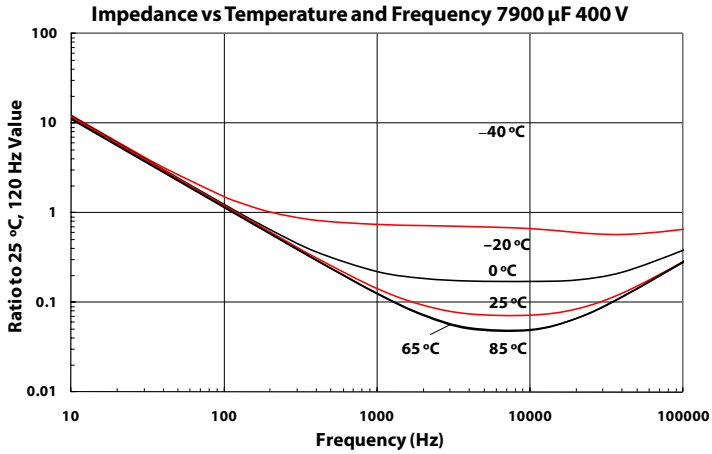

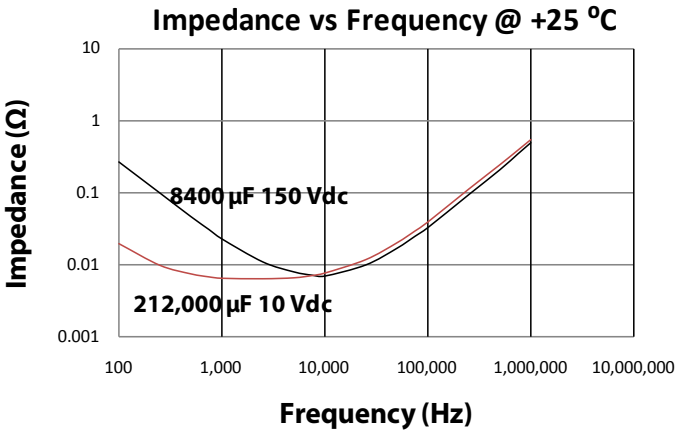

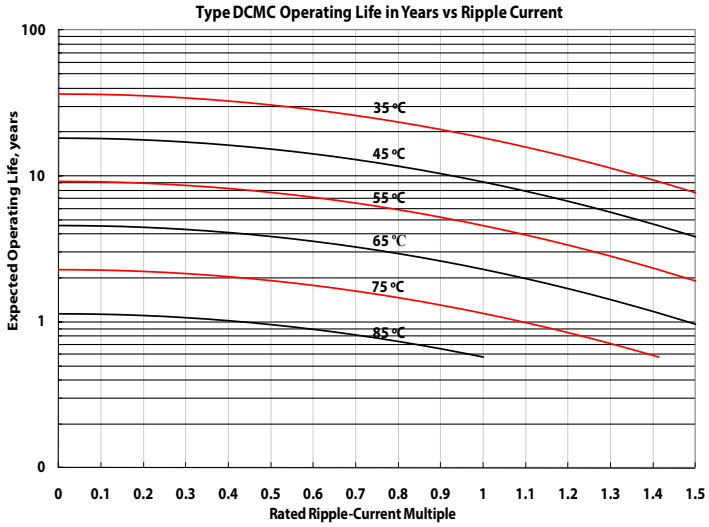

Notice and Disclaimer: All product drawings, descriptions, specifications, statements, information and data (collectively, the "Information") in this datasheet or other publication are subject to change. The customer is responsible for checking, confirming and verifying the extent to which the Information contained in this datasheet or other publication is applicable to an order at the time the order is placed. All Information given herein is believed to be accurate and reliable, but it is presented without any guarantee, warranty, representation or responsibility of any kind, expressed or implied. Statements of suitability for certain applications are based on the knowledge that the Cornell Dubilier company providing such statements ("Cornell Dubilier") has of operating conditions that such Cornell Dubilier company regards as typical for such applications, but are not intended to constitute any guarantee, warranty or representation regarding any such matter – and Cornell Dubilier specifically and expressly disclaims any guarantee, warranty or representation concerning the suitability for a specific customer application, use, storage, transportation, or operating environment. The Information is intended for use only by customers who have the requisite experience and capability to determine the correct products for their application. Any technical advice inferred from this Information or otherwise provided by Cornell Dubilier with reference to the use of any Cornell Dubilier products is given gratis (unless otherwise specified by Cornell Dubilier), and Cornell Dubilier assumes no obligation or liability for the advice given or results obtained. Although Cornell Dubilier strives to apply the most stringent quality and safety standards regarding the design and manufacturing of its products, in light of the current state of the art, isolated component failures may still occur. Accordingly, customer applications which require a high degree of reliability or safety should employ suitable designs or other safeguards (such as installation of protective circuitry or redundancies or other appropriate protective measures) in order to ensure that the failure of an electrical component does not result in a risk of personal injury or property damage. Although all product-related warnings, cautions and notes must be observed, the customer should not assume that all safety measures are indicated in such warnings, cautions and notes, or that other safety measures may not be required.

Type ALH, AC Filter Capacitors for Harsh Environments

85 °C / 85% RH , 1500h @ Vr, AEC-Q200 Qualified

Type ALH AC harmonic filter capacitors use the most advanced construction technology to meet the challenges of harsh environments. The series offers 50% greater life than competitive 85/85 THB-rated power film capacitors with designs that pass the rigors of automotive-grade electrical and mechanical testing.

Highlights

- Optimized AC voltage performance
- THB 85 °C / 85% RH 1500 h at rated voltage
- Self-healing and low loss
- Suitable for high frequency applications

Specifications

Capacitance Range	0.22 to 50 µF
Capacitance Tolerance	±10% standard , ±5% optional
Rated Voltage	160 to 450 Vac
Operating Temperature Range	-40 °C to 105 °C (>85 °C derate voltage 1.35% per °C)
Maximum rms Current	see data tables
Test Voltage between Terminals @ 25 °C	150% equivalent DC voltage (1.414 x Vac) for 10s
Test Voltage between Terminals and Case @ 25°C	3 kVac @ 50/60 Hz for 10 s
Insulation Resistance	≥30,000 MΩxµF @ 100 Vdc 25 °C after 1 minute
Life Expectancy	100,000 h @ 70°C hot spot, rated voltage
THB Rating	85 °C / 85% RH - rated voltage - 1500 h
Reference Standards	IEC 61071, AEC-Q200 qualified
RoHS Compliant	

Dimensions

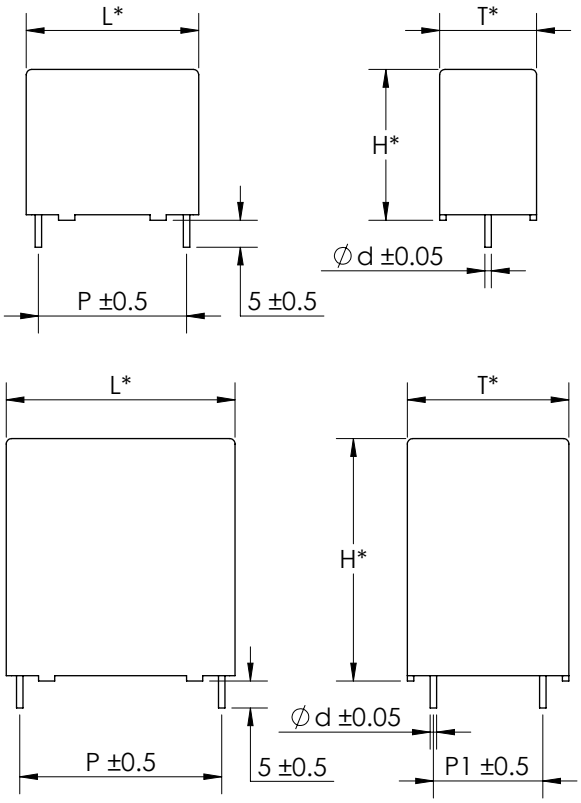

* ±0.8 for L ≤ 42.5mm
±1.0 for L = 57.5mm

Construction Details	
Case Material	Plastic UL94V-0
Resin Material	Dry Resin UL94V-0
Terminal Material	Tin Plated Copper

UL Recognized E128034
construction only - unprotected

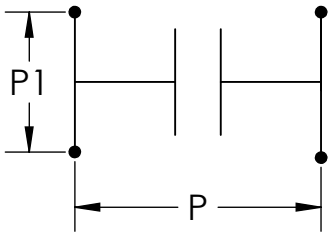

Type ALH, AC Filter Capacitors for Harsh Environments

85 °C / 85% RH , 1500h @ Vr, AEC-Q200 Qualified

Part Numbering System

ALH	406	K	251	C08	4
Series	Capacitance	Tolerance	Voltage	Case	Leads
ALH	EIA Cap Code	K = ±10% Standard	161 = 160 Vac	See ratings table	2 = 2 Leads
	684 = 0.68 µF	J = ±5% Optional	251 = 250 Vac		4 = 4 Leads
	105 = 1 µF		271 = 275 Vac		
	406 = 40 µF		351 = 350 Vac		
			401 = 400 Vac		
			451 = 450 Vac		

Ratings

Part Number	Cap C (µF)	Typ ESR 10 kHz (mΩ)	Thermal Res (°C/W)	Irms 10 kHz 70 °C (A)	Typ ESL (nH)	dv/dt (V/µs)	Peak Current (A)	Dimensions L (mm)	H (mm)	T (mm)	P (mm)	P1 (mm)	d (mm)
160 Vac													
ALH105K161A022	1.0	30.3	19.8	5	24	32	32.0	32.0	20	11.0	27.5	\	0.8
ALH225K161A022	2.2	15.3	20.0	7	24	32	70.4	32.0	20	11.0	27.5	\	0.8
ALH335K161A032	3.3	11.3	27.1	7	24	32	105.6	32.0	22	13.0	27.5	\	0.8
ALH505K161A052	5.0	8.8	34.8	7	26	32	160.0	32.0	28	14.0	27.5	\	0.8
ALH106K161A072	10.0	6.8	45.0	7	26	32	320.0	32.0	33	18.0	27.5	\	0.8
ALH106K161B064	10.0	7.2	14.5	12	30	22	220.0	42.5	37	28.0	37.5	10.2	1.2
ALH206K161B064	20.0	6.9	15.1	12	30	22	440.0	42.5	37	28.0	37.5	10.2	1.2
ALH306K161B104	30.0	7.4	14.1	12	30	22	660.0	42.5	45	30.0	37.5	20.3	1.2
ALH406K161C064	40.0	7.6	13.7	12	35	16	640.0	57.5	45	30.0	52.5	20.3	1.2
ALH506K161C084	50.0	7.5	13.9	12	35	16	800.0	57.5	50	35.0	52.5	20.3	1.2
250 Vac													
ALH105K251A022	1.0	14.0	16.7	8	24	40	40.0	32.0	20	11.0	27.5	\	0.8
ALH155K251A022	1.5	10.0	23.4	8	24	40	60.0	32.0	20	11.0	27.5	\	0.8
ALH205K251A032	2.0	8.2	22.6	9	24	40	80.0	32.0	22	13.0	27.5	\	0.8
ALH335K251A052	3.3	6.2	29.9	9	26	40	132.0	32.0	28	14.0	27.5	\	0.8
ALH405K251A072	4.0	5.9	31.4	9	26	40	160.0	32.0	33	18.0	27.5	\	0.8
ALH505K251A072	5.0	5.2	35.6	9	26	40	200.0	32.0	33	18.0	27.5	\	0.8
ALH685K251A082	6.8	4.9	15.6	9	28	40	272.0	32.0	37	22.0	27.5	\	0.8
ALH106K251B084	10.0	5.6	13.7	14	30	30	300.0	42.5	40	20.0	37.5	10.2	1.2
ALH156K251B064	15.0	5.2	14.7	14	30	30	450.0	42.5	37	28.0	37.5	10.2	1.2
ALH206K251B104	20.0	4.8	15.9	14	30	30	600.0	42.5	45	30.0	37.5	20.3	1.2
ALH256K251C064	25.0	5.7	13.4	14	35	25	625.0	57.5	45	30.0	52.5	20.3	1.2
ALH306K251C064	30.0	5.3	14.4	14	35	25	750.0	57.5	45	30.0	52.5	20.3	1.2
ALH356K251C084	35.0	5.5	13.9	14	35	25	875.0	57.5	50	35.0	52.5	20.3	1.2
ALH406K251C084	40.0	5.2	14.7	14	35	25	1000.0	57.5	50	35.0	52.5	20.3	1.2

Type ALH Polypropylene Board Mount AC Filtering Capacitors

85 °C / 85% RH , 1500h @ Vr, AEC-Q200 Qualified

Part Number	Cap C (µF)	Typ ESR 10 kHz (mΩ)	Thermal Res (°C/W)	Irms 10 kHz 70 °C (A)	Typ ESL (nH)	dv/dt (V/µs)	Peak Current (A)	Dimensions L (mm)	H (mm)	T (mm)	P (mm)	P1 (mm)	d (mm)
275 Vac													
ALH105K271A022	1.0	13.0	18.0	8	24	40	40.0	32.0	20	11.0	27.5	\	0.8
ALH335K271A072	3.3	6.2	29.9	9	26	40	132.0	32.0	33	18.0	27.5	\	0.8
ALH685K271A082	6.8	4.7	39.4	9	28	40	272.0	32.0	37	22.0	27.5	\	0.8
ALH106K271B084	10.0	5.9	13.0	14	30	30	300.0	42.5	40	20.0	37.5	10.2	1.2
ALH156K271B104	15.0	5.1	15.0	14	30	30	450.0	42.5	45	30.0	37.5	20.3	1.2
ALH206K271C064	20.0	6.0	12.8	14	35	25	500.0	57.5	45	30.0	52.5	20.3	1.2
ALH306K271C084	30.0	5.3	14.4	14	35	25	750.0	57.5	50	35.0	52.5	20.3	1.2
350 Vac													
ALH684K351A022	0.68	15.0	15.6	8	24	45	30.6	32.0	20	11.0	27.5	\	0.8
ALH105K351A032	1.0	10.9	17.0	9	24	45	45.0	32.0	22	13.0	27.5	\	0.8
ALH205K351A072	2.0	7.3	25.4	9	26	45	90.0	32.0	33	18.0	27.5	\	0.8
ALH225K351A072	2.2	6.9	26.8	9	26	45	99.0	32.0	33	18.0	27.5	\	0.8
ALH335K351A082	3.3	5.7	32.5	9	28	45	148.5	32.0	37	22.0	27.5	\	0.8
ALH475K351B084	4.7	6.9	11.1	14	30	34	159.8	42.5	40	20.0	37.5	10.2	1.2
ALH505K351B084	5.0	6.8	11.3	14	30	34	170.0	42.5	40	20.0	37.5	10.2	1.2
ALH685K351B064	6.8	6.2	12.3	14	30	34	231.2	42.5	37	28.0	37.5	10.2	1.2
ALH106K351B104	10.0	5.3	14.4	14	30	34	340.0	42.5	45	30.0	37.5	20.3	1.2
ALH126K351C064	12.0	6.8	11.3	14	35	28	336.0	57.5	45	30.0	52.5	20.3	1.2
ALH206K351C084	20.0	5.9	13.0	14	35	28	560.0	57.5	50	35.0	52.5	20.3	1.2
400 Vac													
ALH474K401A022	0.47	18.6	16.5	7	24	50	23.5	32.0	20	11.0	27.5	\	0.8
ALH105K401A052	1.0	10.3	18.0	9	26	50	50.0	32.0	28	14.0	27.5	\	0.8
ALH155K401A072	1.5	8.1	22.9	9	26	50	75.0	32.0	33	18.0	27.5	\	0.8
ALH225K401A072	2.2	6.4	28.9	9	26	50	110.0	32.0	33	18.0	27.5	\	0.8
ALH305K401A082	3.0	5.7	32.5	9	28	50	150.0	32.0	37	22.0	27.5	\	0.8
ALH505K401B064	5.0	6.2	12.3	14	30	40	200.0	42.5	37	28.0	37.5	10.2	1.2
ALH106K401C064	10.0	6.9	11.1	14	35	35	350.0	57.5	45	30.0	52.5	20.3	1.2
ALH156K401C084	15.0	6.1	12.5	14	35	35	525.0	57.5	50	35.0	52.5	20.3	1.2
450 Vac													
ALH224K451A022	0.22	30.9	19.4	5	24	55	12.1	32.0	20	11.0	27.5	\	0.8
ALH474K451A032	0.47	15.7	14.9	8	24	55	25.9	32.0	22	13.0	27.5	\	0.8
ALH105K451A072	1.0	9.2	25.5	8	26	55	55.0	32.0	33	18.0	27.5	\	0.8
ALH155K451A082	1.5	7.3	32.1	8	28	55	82.5	32.0	37	22.0	27.5	\	0.8
ALH335K451B064	3.3	7.4	10.3	14	30	45	148.5	42.5	37	28.0	37.5	10.2	1.2
ALH475K451B104	4.7	6.2	12.3	14	30	45	211.5	42.5	45	30.0	37.5	20.3	1.2
ALH685K451C064	6.8	7.5	10.2	14	35	38	258.4	57.5	45	30.0	52.5	20.3	1.2
ALH106K451C084	10.0	6.6	11.6	14	35	38	380.0	57.5	50	35.0	52.5	20.3	1.2

Type ALH, AC Filter Capacitors for Harsh Environments

85 °C / 85% RH , 1500h @ Vr, AEC-Q200 Qualified

Typical Performance Curves

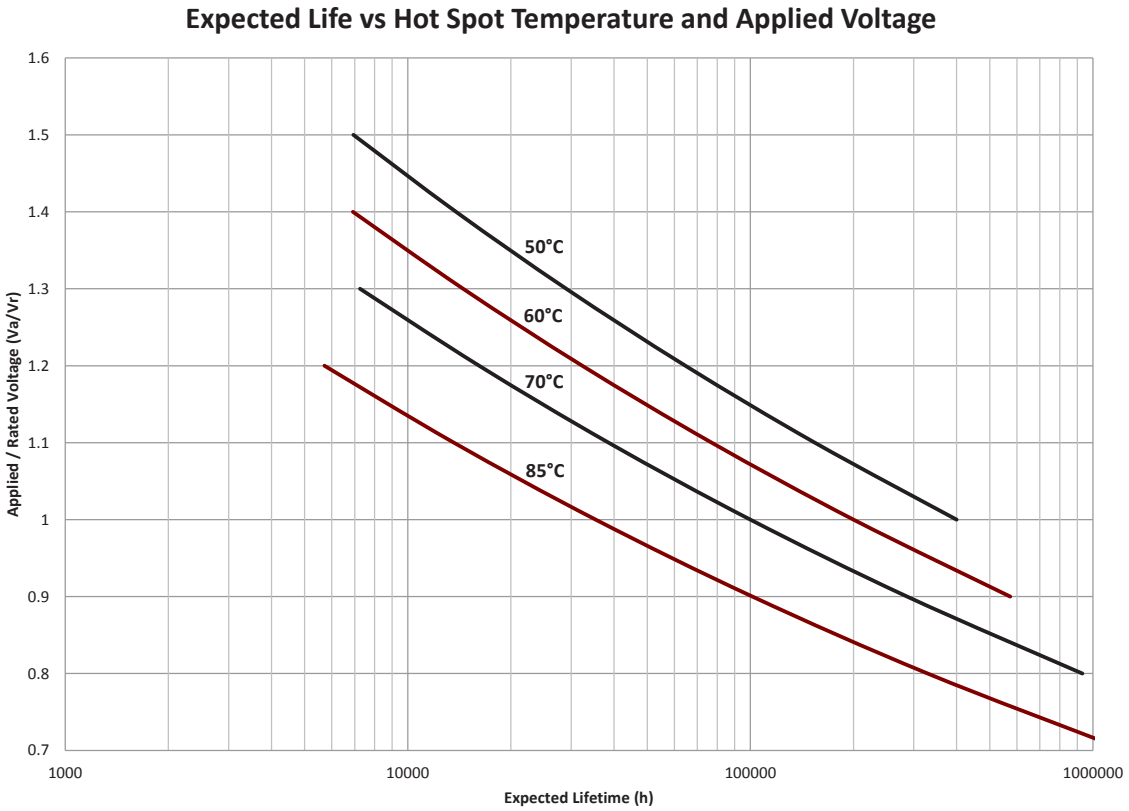

Notice and Disclaimer: All product drawings, descriptions, specifications, statements, information and data (collectively, the "Information") in this datasheet or other publication are subject to change. The customer is responsible for checking, confirming and verifying the extent to which the Information contained in this datasheet or other publication is applicable to an order at the time the order is placed. All Information given herein is believed to be accurate and reliable, but it is presented without any guarantee, warranty, representation or responsibility of any kind, expressed or implied. Statements of suitability for certain applications are based on the knowledge that the Cornell Dubilier company providing such statements ("Cornell Dubilier") has of operating conditions that such Cornell Dubilier company regards as typical for such applications, but are not intended to constitute any guarantee, warranty or representation regarding any such matter – and Cornell Dubilier specifically and expressly disclaims any guarantee, warranty or representation concerning the suitability for a specific customer application, use, storage, transportation, or operating environment. The Information is intended for use only by customers who have the requisite experience and capability to determine the correct products for their application. Any technical advice inferred from this Information or otherwise provided by Cornell Dubilier with reference to the use of any Cornell Dubilier products is given gratis (unless otherwise specified by Cornell Dubilier), and Cornell Dubilier assumes no obligation or liability for the advice given or results obtained. Although Cornell Dubilier strives to apply the most stringent quality and safety standards regarding the design and manufacturing of its products, in light of the current state of the art, isolated component failures may still occur. Accordingly, customer applications which require a high degree of reliability or safety should employ suitable designs or other safeguards (such as installation of protective circuitry or redundancies or other appropriate protective measures) in order to ensure that the failure of an electrical component does not result in a risk of personal injury or property damage. Although all product-related warnings, cautions and notes must be observed, the customer should not assume that all safety measures are indicated in such warnings, cautions and notes, or that other safety measures may not be required.

Type PC Power Conversion Capacitors

Type PC capacitors are designed to meet the demands of filter applications rich in system total harmonic distortion (THD). This series has a dual protection system utilizing self healing metallized polypropylene and a mechanical pressure interrupter to ensure a safe open circuit mode in the event of overload or end of life. (*)

Highlights

- Uninterruptable power supplies (UPS)
- AC Tuned filters (harmonic reduction)
- AC Input filtering
- Line conditoning
- Noise suppression
- Variable speed drives
- Wind turbine motoring

Specifications

Capacitance Range	20 µF to 125 µF
Capacitance Tolerance	±5% Standard, ±10%, ±6 and ±3% available
Rated Voltage	300 Vac, 500 Vac, 700 Vac
Operating Temperature Range	–40 ºC to +70 ºC
Maximum Permissible Voltage (Vmax)	110% of rated rms voltage 120% of rated peak voltage (1.2 x √2x Vrms)
Maximum Permissible Current (Imax)	135% of nominal rms current based on the combined effects of harmonics, over voltages capacitances and tolerances
Terminations	M6x1 Threaded tinplated brass terminals standard, other sizes available
Maximum Rated Current (Irms)	70A (Limited by the terminals)
Service Life Objective	60,000 h w/94% survival rate
FIT (Failure In Time)	≤300 x 10^9 component h
Maximum Short Circuit Current (available fault current)	10 kA (according to UL 810)
Notes	Additional ratings, size and terminals are available upon request.
RoHS Compliant	

Outline Drawing

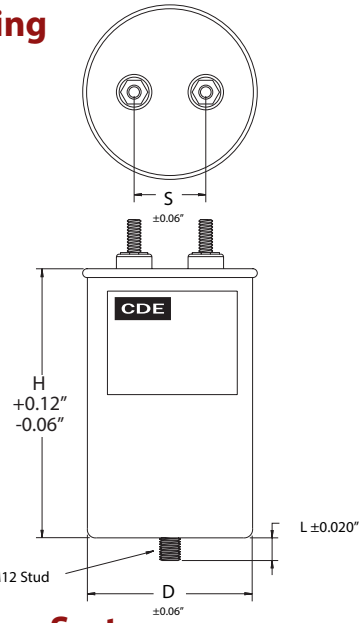

Max torque 88.5 in-lbs.

Construction Details	
Case Material	Extruded aluminum with steel or aluminum cover
Encapsulation	Environmentally safe dielectric fluid

Case Diameter (in)	S Dimension (in)	L Dimension (in)
2.50	1.250	0.487
3.00	1.375	0.630
3.50	1.375	0.630

(*) The capacitor's safety pressure interrupter is designed to disconnect the capacitor element as the cover expands upward due to gas pressure build up. Catastrophic failure may result if movement of the cover and or terminals are restricted. Rigid bus bars are not recommended as they may restrict movement of the cover or terminals. Customers are advised to provide at least 0.5" clearance above the cover to allow for its expansion.

Part Numbering System

PC	S	T	30	A	150	J	569	S
Series	**Type**	**Base Size**	**Voltage (Vrms)**	**Case Material**	**Capacitance**	**Tolerance (%)**	**Case Height (in)**	**Terminals**
PC	**S** = Standard Cell **H** = Harmonic Rated Cell	**T** = 2½" Round **V** = 3" Round **X** = 3.5" Round	**30** = 300 **50** = 500 **70** = 700	**A** = Aluminum case and cover **T** = Aluminum case w/steel cover	Capacitance value	J = ±5%	Expressed as 3 digit number rounded and displayed without decimal point	S = Studs

CDE Cornell Dubilier • 1605 E. Rodney French Blvd. • New Bedford, MA 02744 • Phone: (508)996-8561 • Fax: (508)996-3830

Type PC Power Conversion Capacitors

Ratings

CDE Catalog Number	Cn (µF)	Rs (Ω)	E.S.L. (nH)	I peak (A)	dV/dT (V/µs)	Rth (hs) (°C/W)	Max Power (W)			Case Diameter		Case Height		SA (in²)
							25 °C	50 °C	70 °C	(in)	(mm)	(in)	(mm)	
300 Vrms 424 Vpeak														
PCST30A50J291S	50	0.0028	44	2127	43	8.63	7.0	4.1	1.7	2.5	63.5	2.91	74	33
PCST30A75J391S	75	0.0035	75	2040	27	6.95	8.6	5.0	2.2	2.5	63.5	3.91	99	41
PCST30A100J475S	100	0.0044	102	1926	19	5.97	10.0	5.9	2.5	2.5	63.5	4.75	121	47
PCSV30A125J475S	125	0.0036	102	2908	23	4.78	12.6	7.3	3.1	3.0	76.0	4.75	121	59
500 Vrms 707 Vpeak														
PCST50T40J475S	40	0.0047	102	1252	31	5.97	10.0	5.9	2.5	2.5	63.5	4.75	121	47
PCSV50T60J475S	60	0.0037	102	1877	31	4.78	12.6	7.3	3.1	3.0	76.0	4.75	121	59
PCSV50T80J475S	80	0.0033	102	2503	31	4.78	12.6	7.3	3.1	3.0	76.0	4.75	121	59
PCSV50T110J572S	110	0.0039	133	2522	23	4.13	14.5	8.5	3.6	3.0	76.0	5.72	145	68
PCSX50T125J572S	125	0.0037	133	2865	23	3.42	17.5	10.2	4.4	3.5	88.0	5.72	145	82
700 Vrms 990 Vpeak														
PCST70T20J475S	20	0.0060	102	883	44	5.97	10.0	5.9	2.5	2.5	63.5	4.75	121	47
PCST70T30J572S	30	0.0071	133	970	32	5.14	11.7	6.8	2.9	2.5	63.5	5.72	145	55
PCST70T40J616S	40	0.0083	147	1020	26	4.83	12.4	7.2	3.1	2.5	63.5	6.16	157	58
PCSV70T50J616S	50	0.0071	147	1275	26	3.89	15.4	9.0	3.9	3.0	76.0	6.16	157	72
PCSV70T60J616S	60	0.0062	147	1530	26	3.89	15.4	9.0	3.9	3.0	76.0	6.16	157	72

Performance Notes

I max: Maximum rms current value for continuous operation (A)

I peak: Maximum current amplitude for continuous operation (A)

R_s: Equivalent series resistance – Ohmic resistances (Ohm)

Dielectric Dissipation Factor: tan δ (Polypropylene: 0.0002)

T_{hs}: Hot spot temperature within the capacitor: $T_{hs} = T_a + (P_{total} \cdot 280 / SA)$

T_a: Ambient temperature

R_{th}: Thermal resistance: °C/ Watt, indicates hot spot temperature rise due to power dissipation losses

P_{max}: Maximum power dissipation: $P_{max} = (85\ ºC - T_a) / R_{th}$ (Watts)

P_{Total}: Total Power generated by Dielectric and Ohmic Losses: $P = V_{peak}^2 \cdot C \cdot TT \cdot F \cdot DF$ (Watts) given Voltage

$P = I^2 \cdot [R_s + (X_C \cdot DF)]$ (Watts) given Current

Where $P_{Total} = P_{Fund} + P_{Harm1} + P_{Harm2} + ... + P_{Harm\infty}$

Design life: 60,000 hours 94% survival T_{hs}: 85 °C

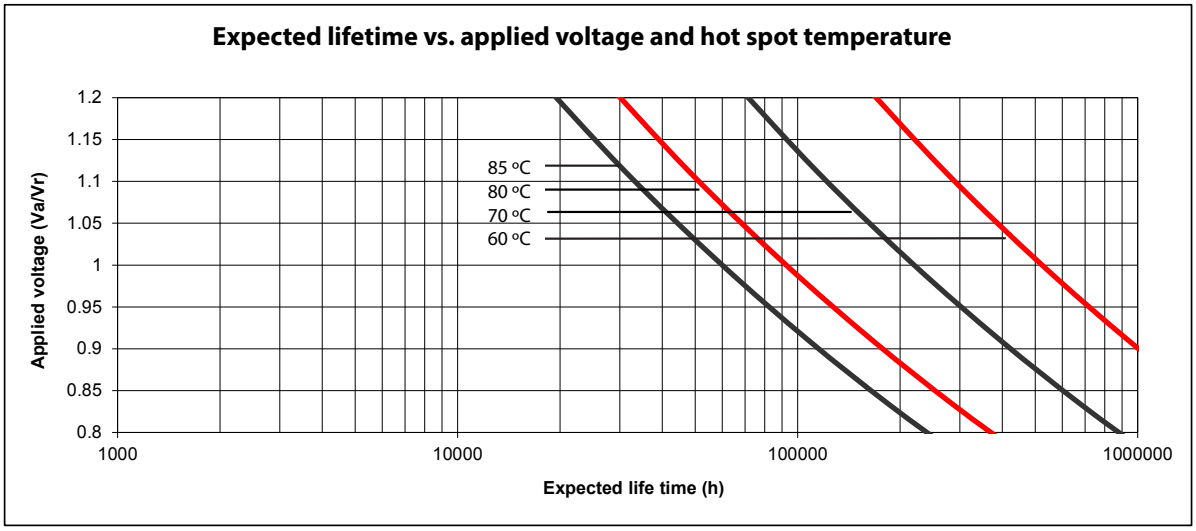

Notice and Disclaimer: All product drawings, descriptions, specifications, statements, information and data (collectively, the "Information") in this datasheet or other publication are subject to change. The customer is responsible for checking, confirming and verifying the extent to which the Information contained in this datasheet or other publication is applicable to an order at the time the order is placed. All Information given herein is believed to be accurate and reliable, but it is presented without any guarantee, warranty, representation or responsibility of any kind, expressed or implied. Statements of suitability for certain applications are based on the knowledge that the Cornell Dubilier company providing such statements ("Cornell Dubilier") has of operating conditions that such Cornell Dubilier company regards as typical for such applications, but are not intended to constitute any guarantee, warranty or representation regarding any such matter – and Cornell Dubilier specifically and expressly disclaims any guarantee, warranty or representation concerning the suitability for a specific customer application, use, storage, transportation, or operating environment. The Information is intended for use only by customers who have the requisite experience and capability to determine the correct products for their application. Any technical advice inferred from this Information or otherwise provided by Cornell Dubilier with reference to the use of any Cornell Dubilier products is given gratis (unless otherwise specified by Cornell Dubilier), and Cornell Dubilier assumes no obligation or liability for the advice given or results obtained. Although Cornell Dubilier strives to apply the most stringent quality and safety standards regarding the design and manufacturing of its products, in light of the current state of the art, isolated component failures may still occur. Accordingly, customer applications which require a high degree of reliability or safety should employ suitable designs or other safeguards (such as installation of protective circuitry or redundancies or other appropriate protective measures) in order to ensure that the failure of an electrical component does not result in a risk of personal injury or property damage. Although all product-related warnings, cautions and notes must be observed, the customer should not assume that all safety measures are indicated in such warnings, cautions and notes, or that other safety measures may not be required.

Type PCD, AC Power Conversion Capacitors

Dual Protected, UL 810 Fail Safe, Rated 10,000 AFC

Type PCD capacitors are designed to meet the demands of AC filter applications rich in system total harmonic distortion (THD). This series has a patented dual protection system utilizing self healing metallized polypropylene and a mechanical pressure interrupter designed to operate while bus bar mounted or bottom stud mounted to ensure a safe open circuit mode in the event of overload or end of life.

Highlights

- Patented Dual Protection
- UL 810 Approved
- 85 ºC / 85% RH for 1000h at Vr x 1.25
- Solid Busbar Mountable
- Dry Construction
- cULus recognized File Number E71645

Specifications

Capacitance Range	20 µF to 125 µF
Capacitance Tolerance	±5% Standard, ±10%, ±6 and ±3% available
Rated Voltage	240 Vac, 480 Vac, 600 Vac
Operating Temperature Range	–40 ºC to +70 ºC
Maximum Permissible Voltage (Vmax)	110% of rated rms voltage 120% of rated peak voltage (1.2 x √2x Vrms)
Maximum Permissible Current (Imax)	135% of nominal rms current based on the combined effects of harmonics, over voltages, capacitances and tolerances
Terminations	M6x1 Threaded tinplated brass terminals standard, other sizes available
Maximum Rated Current (Irms)	85A (Limited by the terminals)
Service Life Objective	60,000 h w/94% survival rate
FIT (Failure In Time)	≤300 x 10^9 component h
Maximum Short Circuit Current (available fault current)	10 kA (according to UL 810)
Notes	Additional ratings, size and terminals are available upon request.
Regulatory Information	

Outline Drawing

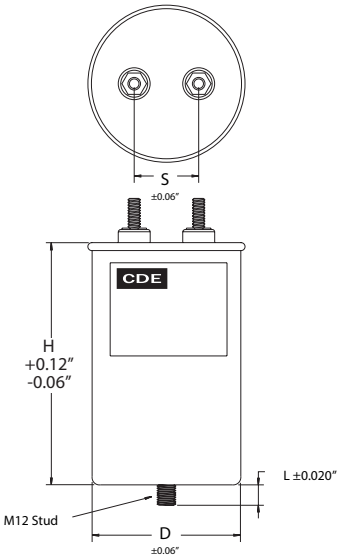

Construction Details	
Case Material	Extruded aluminum with steel or aluminum cover
Encapsulation	Soft gel (Oil optional)

Case Diameter (in)	S Dimension (in)	L Dimension (in)
2.50	1.250	0.487
3.00	1.375	0.630
3.50	1.375	0.630

Type PCD, AC Power Conversion Capacitors

Dual Protected, UL 810 Fail Safe, Rated 10,000 AFC

Up / Down Activation

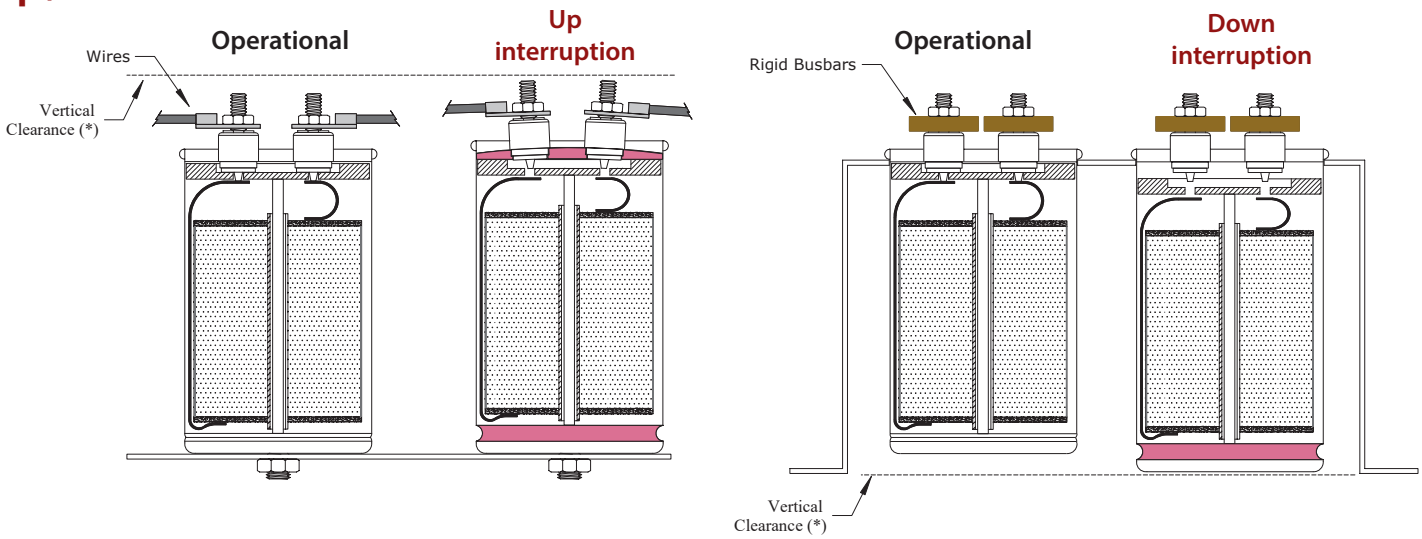

(*) Vertical Clearance – Proper operation of the patented dual protection system requires that a minimum of 0.5" vertical clearance be carefully observed above the capacitor terminals if flexible connections are used or under the capacitor body if busbar mounted.

Part Numbering System

PCD	G	T	4	A	150	J	569	S
Series	**Type**	**Base Size**	**Voltage (Vrms)**	**Case Material**	**Capacitance**	**Tolerance (%)**	**Case Height (in)**	**Terminals**
PCD	**G** = Gel Filled **O** = Oil Filled	**T** = 2½" Round **V** = 3" Round **X** = 3.5" Round **Y** = 4" Round **Z** = 4.5" Round	**24**= 240 **48** = 480 **60** = 600	**A** = Aluminum case and cover **T** = Aluminum case w/steel cover	Capacitance value	J = ±5%	Expressed as 3 digit number rounded and displayed without decimal point	S = Studs

Ratings

CDE Catalog Number	Cn (µF)	Rs (Ω)	E.S.L. (nH)	I peak (A)	dV/dT (V/µs)	Rth (hs) (°C/W)	Max Power (W)			Case Diameter		Case Height		SA (in²)
							25°C	50°C	70°C	(in)	(mm)	(in)	(mm)	
240Vrms 339Vpeak														
PCDGT24A50J391S	50	0.0038	75	2127	43	6.91	8.7	5.1	2.2	2.5	63.5	3.91	99	41
PCDGT24A75J475S	75	0.0035	102	2040	27	5.94	10.1	5.9	2.5	2.5	63.5	4.75	121	47
PCDGT24A100J572S	100	0.0044	133	1926	19	5.11	11.7	6.8	2.9	2.5	63.5	5.72	145	55
PCDGV24A125J572S	125	0.0047	133	2908	23	4.11	14.6	8.5	3.6	3.0	76.0	5.72	145	68
480Vrms 679Vpeak														
PCDGT48A40J572S	40	0.0057	133	1252	31	5.11	11.7	6.8	2.9	2.5	63.5	5.72	145	55
PCDGV48A60J572S	60	0.0048	133	1877	31	4.11	14.6	8.5	3.6	3.0	76.0	5.72	145	68
PCDGV48A80J572S	80	0.0033	133	2503	31	4.11	14.6	8.5	3.6	3.0	76.0	5.72	145	68
PCDGV48A110J635S	110	0.0049	153	2522	23	3.78	15.9	9.2	4.0	3.0	76.0	6.35	161	74
PCDGX48A125J635S	125	0.0047	153	2865	23	3.14	19.1	11.1	4.8	3.5	88.0	6.35	161	89
600Vrms 849Vpeak														
PCDGT60A20J475S	20	0.0036	102	2512	126	5.94	10.1	5.9	2.5	2.5	63.5	4.75	121	47
PCDGV60A30J475S	30	0.0023	102	3769	126	4.75	12.6	7.4	3.2	3.0	76.0	4.75	121	59
PCDGX60A40J475S	40	0.0022	102	5025	126	3.92	15.3	8.9	3.8	3.5	88.0	4.75	121	71
PCDGX60A50J572S	50	0.0036	133	4255	85	3.41	17.6	10.3	4.4	3.5	88.0	5.72	145	82
PCDGX60A60J572S	60	0.0025	133	5106	85	3.41	17.6	10.3	4.4	3.5	88.0	5.72	145	82

Type PCD, AC Power Conversion Capacitors

Dual Protected, UL 810 Fail Safe, Rated 10,000 AFC

Performance Notes

I max: Maximum rms current value for continuous operation (A)

I peak: Maximum current amplitude for continuous operation (A)

R_s: Equivalent series resistance – Ohmic resistances (Ohm)

Dielectric Dissipation Factor: tan δ (Polypropylene: 0.0002)

T_{hs}: Hot spot temperature within the capacitor: $T_{hs} = T_a + (P_{total} \cdot 280 / SA)$

T_a: Ambient temperature

R_{th}: Thermal resistance: °C/ Watt, indicates hot spot temperature rise due to power dissipation losses

P_{max}: Maximum power dissipation: $P_{max} = (85\ ºC - T_a) / R_{th}$ (Watts)

P_{Total}: Total Power generated by Dielectric and Ohmic Losses: $P = V_{peak}^2 \cdot C \cdot \pi \cdot F \cdot DF$ (Watts) given Voltage

$P = I^2 \cdot [R_s + (X_C \cdot DF)]$ (Watts) given Current

Where $P_{Total} = P_{Fund} + P_{Harm1} + P_{Harm2} + ... + P_{Harm\infty}$

Design life: 60,000 hours 94% survival T_{hs}: 85 °C

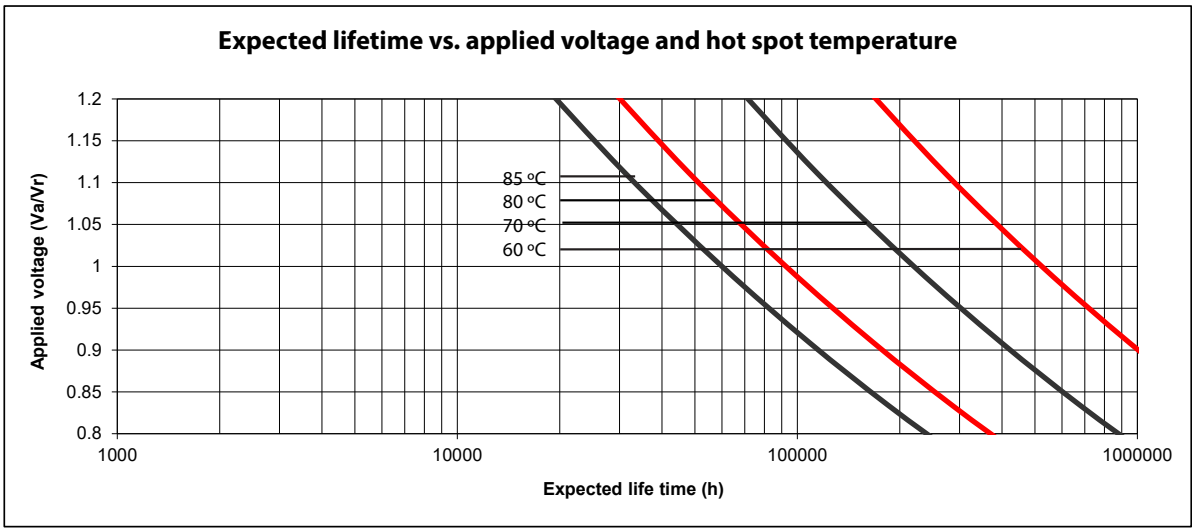

Notice and Disclaimer: All product drawings, descriptions, specifications, statements, information and data (collectively, the "Information") in this datasheet or other publication are subject to change. The customer is responsible for checking, confirming and verifying the extent to which the Information contained in this datasheet or other publication is applicable to an order at the time the order is placed. All Information given herein is believed to be accurate and reliable, but it is presented without any guarantee, warranty, representation or responsibility of any kind, expressed or implied. Statements of suitability for certain applications are based on the knowledge that the Cornell Dubilier company providing such statements ("Cornell Dubilier") has of operating conditions that such Cornell Dubilier company regards as typical for such applications, but are not intended to constitute any guarantee, warranty or representation regarding any such matter – and Cornell Dubilier specifically and expressly disclaims any guarantee, warranty or representation concerning the suitability for a specific customer application, use, storage, transportation, or operating environment. The Information is intended for use only by customers who have the requisite experience and capability to determine the correct products for their application. Any technical advice inferred from this Information or otherwise provided by Cornell Dubilier with reference to the use of any Cornell Dubilier products is given gratis (unless otherwise specified by Cornell Dubilier), and Cornell Dubilier assumes no obligation or liability for the advice given or results obtained. Although Cornell Dubilier strives to apply the most stringent quality and safety standards regarding the design and manufacturing of its products, in light of the current state of the art, isolated component failures may still occur. Accordingly, customer applications which require a high degree of reliability or safety should employ suitable designs or other safeguards (such as installation of protective circuitry or redundancies or other appropriate protective measures) in order to ensure that the failure of an electrical component does not result in a risk of personal injury or property damage. Although all product-related warnings, cautions and notes must be observed, the customer should not assume that all safety measures are indicated in such warnings, cautions and notes, or that other safety measures may not be required.

CDE

AeroPower™ Power Factor Correction Capacitors

SINGLE-PHASE AND THREE-PHASE PFC CAPACITORS FOR HIGH RELIABILITY APPLICATIONS

Intelligent Capacitor Solutions

AeroPower™ power factor correction capacitors are constructed using high quality materials and Lean Six Sigma manufacturing practices to provide reliable performance and long life during continuous use.

Cornell Dubilier capacitors undergo 100% electrical and visual testing to further ensure high level performance. If you have specialized needs, our flexible manufacturing processes allow us to quickly provide custom configurations.

CONTENTS

General Information 3

Construction 4

Harmonic Distortion 4

Cover Terminals 5

Specifications: AMP0, MMP0 and EPFC Capacitors 7

Safety Features 11

Mounting Orientation 11

Part Numbering System 11

Ratings Tables & Drawings: AMP0, MMP0 and EPFC Capacitors 12

Capacitor Fundarmentals 23

Equations for Reactive Compensation and Harmonic Distortion 27

PFC Capacitor Care, Troubleshooting and Common Issues 29

CDE provides intelligent capacitor solutions.

AeroPower™ Power Factor Correction Capacitors

SINGLE-PHASE AND THREE-PHASE PFC CAPACITORS FOR HIGH RELIABILITY APPLICATIONS

CDE manufactures both single-phase and three-phase power factor correction capacitors up to 4,800 VAC. Our AeroPower brand PFC capacitors are designed for high reliability applications, and have a life rating of over 200,000 hours. They are designed to withstand harmonic currents, with special high harmonic versions available.

Three types of standard reactive compensation capacitors are available:

- AMP0: Vacuum-impregnated metallized polypropylene, compact size. Available in both oil-filled and dry configurations. (Made in USA.)
- MMP0: Vacuum-impregnated metallized polypropylene, rugged welded case. (Made in USA.)
- EPFC: Euro-style vacuum-impregnated metallized polypropylene, round aluminum studded case. (Made in China and India.)

Highlights

- Both European and North American styles available
- Long life
- Over-current rating to 150% (200% for 50 Hz EPFC)
- Over-voltage rating to 120%
- Includes discharge resistors
- Large 325 KVAR capacitors available
- Single-phase and three-phase
- Loss of KVAR/fault detection
- Oil or epoxy filled versions available

Applications

- Power Factor Correction Systems
- Harmonic Filters
- Alternative Energy Power Systems
- Induction Heating Capacitor Alternatives

Custom ratings and sizes are available. Please contact CDE.

Specifications

KVAR Range:	0.5 to 325 KVAR
Capacitance Tolerance:	0 to +15%
AC Voltage Range:	240 VAC to 4,800 VAC; single-phase or three-phase
Rated Frequency:	50 or 60 Hz
Capacitor Connection:	3-phase, internal delta connection standard; wye available on request
Operating Life:	100,000–200,000+ hours
Total Losses:	<0.5 Watts / KVAR at 60 Hertz, 25°C
Operating Temperature Range:	-40°C to +55°C
Approval Certification:	UL, cUL (≤600 VAC)
Humidity Standards:	0 to 95%, non-condensing UL 810,UL C22.2, ANSI/IEEE 18, NEMA CP-1, IEC 60871-1, IEC 60831 and IS 13340

CDE CORNELL DUBILIER
ENERGIZING IDEAS

1605 E. Rodney French Blvd. Tel: 508-996-8561 sales1@cde.com
New Bedford, MA 02745 Fax: 508-996-3830 www.CDE.com

Standard Voltage and KVAR Ratings at 60 Hertz*

LOW VOLTAGE	AMP0	EPFC	MMP0
240 VAC	0.5–10	0.5–10	20–30
480 VAC	0.5–25	2–40	25–100
600 VAC	1.0–25	10–40	25–100
750 VAC	–	–	25–150

MEDIUM VOLTAGE	MMP0
900 VAC	25–150
1040 VAC	25–240
1200 VAC	25–240
2400 VAC	25–300
2770 VAC	25–300
4160 VAC	25–300
4800 VAC	25–325

Standard Voltage and KVAR Ratings at 50 Hertz

LOW VOLTAGE	EPFC
400 VAC	2–50
415 VAC	2–50
440 VAC	2–50
480 VAC	5–25
525 VAC	5–25

*Please consult the factory for other voltages, frequencies and KVAR ratings.

Construction

All AeroPower capacitors are impregnated with either a dielectric fluid or an epoxy resin to give added insulation, excellent corona protection and a moisture barrier. The dielectric fluid and the epoxy resin are considered a green (benign), environmentally friendly material. MMP0 and EPFC capacitors are 100% leak tested. CDE products do not contain PCBs.

Harmonic Distortion

Harmonic distortion is the resulting non-sinusoidal current waveform generated by a non-linear load. The most common non-linear load is a pulse rectifier, which is used in most switch mode power supplies, variable speed drives and uninterruptible power supplies. The distorted current waveform generates a distorted source voltage due to the system (electrical power system) impedance. A distorted waveform can be analyzed by decomposing it into a fundamental component (line frequency) and higher frequency components of varying amplitude.

The effects of harmonic distortion on metallized film capacitors are (1) higher operating temperature because of higher I^2R losses and (2) higher voltage stress on the dielectric. Both of these factors will shorten the life of a capacitor dramatically.

All CDE power factor correction capacitors are designed to handle harmonic currents, however, CDE also offers capacitors that are custom designed for systems with high harmonic distortion. By using our high-harmonic capacitors in your harmonic rich application, you will have a more robust construction compared to using standard capacitors in the same application.

1605 E. Rodney French Blvd. Tel: 508-996-8561
New Bedford, MA 02745 Fax: 508-996-3830
sales1@cde.com
www.CDE.com

Cover Terminals

AMP0 and low voltage MMP0 cells are available in a three-terminal configuration, specified by KVAR rating (see individual specifications). The internal schematics for these terminal configurations are shown in Figures 1A and 1B.

Figure 1A: AMP0

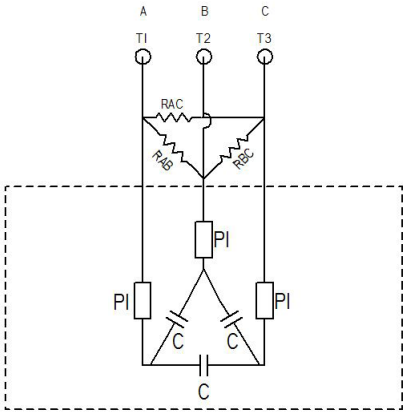

Figure 1B: EPFC & Low Voltage MMP0

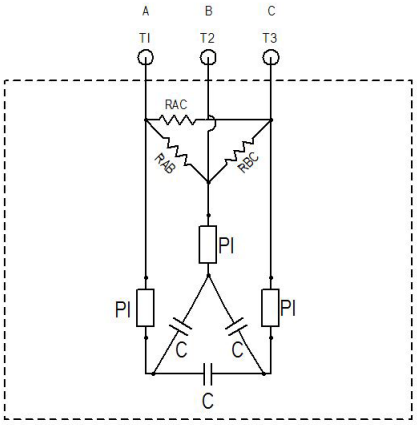

Internal Schematics for Low Voltage
Three-Terminal Capacitors

The schematics for 3-phase AMP0 bank caps

T1: The first terminal of the cap.
T2: The second terminal
T3: The third terminal
PI: Over pressure interuptor, mechanical fuse
C: The capacitor for each phase.

The schematics for 3-phase EPFC & MMP0 bank caps

RAB: The discharge resistor between terminals A & B
RAC: The discharge resistor between terminals A & C
RBC: The discharge resistor between terminals B & C

The Calculation of the 3 Phase Delta Connection Power Factor Capacitor

$Q_{c\Delta} = 3Q_{cph}$ ➔(1)

$Q_{c\Delta} = 3I_cV_c$ ➔(2)

$I_c = \frac{IL}{\sqrt{3}}$

$Q_{c\Delta} = \sqrt{3}$ ILVL ➔(3)

$Q_{c\Delta} = \frac{3V_{cph}^2}{X_{cph}}$ ➔$Q_{c\Delta} = 3W_{cph} \cdot V_{cph}^2$

$C_{ph} = \frac{Q_{c\Delta}}{3WV_{cph}}$ ➔(4)

$V_c = VL$

$Q_{c\Delta} = \frac{VL^2}{X_{line}}$

$\frac{3V_{cph}^2}{X_{cph}} = \frac{VL^2}{X_{line}}$ ➔ $\frac{3}{X_{cph}} = \frac{1}{X_{line}}$

$W \cdot C_{line} = 3W \cdot C_{ph}$

$C_{line} = 3C_{ph}$, $\boxed{Q_{c\Delta} = 3 \cdot W \cdot C_{ph} \cdot V_c^2}$

$\boxed{C_{line} = \frac{Q_{c\Delta}}{WV_c^2}}$

$Q_{c\Delta}$: Capacitive reative power for the 3 Phase Delta

$Q_{cph.}$: Capacitive reative power for each phase of the 3 Phase Delta

I_c: Phase capacitor current

I_L: Line current

$V_{cph.}$: Voltage for each phase capacitor

$X_{cph.}$: Capacitive Reactance for each phase

$C_{ph.}$: Capacitance for each phase

X_{line}: Line capacitive reactance

C_{line}: Line capacitance

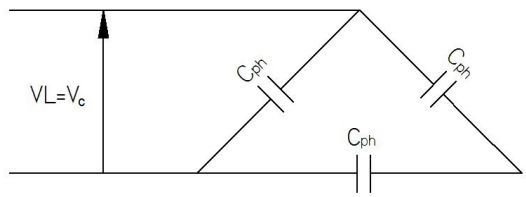

Figure (2)

Safety Features

Discharge resistors are placed internally on MMP0 and EPFC capacitors and externally on AMP0 capacitor cells. The resistors are a safety feature that drains the voltage on the capacitor once the unit is taken offline to less than 50 volts in one minute or less for cells rated up to 600 Vac, or in 5 minutes or less for cells rated over 600 Vac. The resistors are sized for long life continuous operation at maximum rated temperature. CDE low voltage capacitor cells have UL and cUL recognized pressure sensitive circuit interrupters. The circuit interrupter's purpose is to safely remove the capacitor from service at end-of-life or under heavy fault conditions and still maintain case integrity. CDE low voltage capacitor cells are listed for use with or without fuses at 10,000 amps available fault current (AFC) rating.

Self-healing technology: in case of an overload, the self-healing properties of the low loss metallized polypropylene will prevent permanent dielectric breakdown.

Reactive Power Compensation Capacitor Specifications

	AMP0 Low Voltage (Three-phase and single-phase) (up to 600 VAC)	MMP0 Low Voltage (Three-phase and single-phase) (up to 600 VAC)	MMP0 Low Voltage (Three-phase and single-phase) (750 to 900 VAC)	MMP0 Medium Voltage (Three-phase and single-phase) (1040 to 4800 VAC)	EPFC Low Voltage (Three-phase) (up to 600 VAC) (60 Hz)	EPFC Low Voltage (Three-phase) (up to 525 VAC) (50 Hz)
		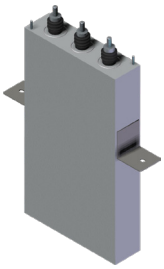	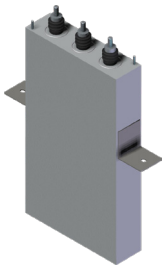			

Electrical Characteristics

Rated Voltages	240, 480 and 600 VAC	240, 480 and 600 VAC	750 and 900 VAC	1040 , 1200, 2400, 2770, 4160 and 4800 VAC	240, 480 and 600 VAC	400, 415, 440, 480 and 525 VAC
Rated Frequency	60 Hertz	60 Hertz	60 Hertz	60 Hertz	60 Hertz	50 Hertz
Capacitor Type	Fluid impregnated (Dry also available)	Fluid impregnated	Fluid impregnated	Fluid impregnated	Fluid impregnated	Fluid impregnated
Dielectric System	Self-healing metallized polypropylene film	Self-healing metallized polypropylene film	Self-healing metallized polypropylene film	Self-healing metallized polypropylene film	Self-healing metallized polypropylene film	Self-healing metallized polypropylene film
Impregnation Fluid	Non-PCB, non-toxic, biodegradable, Class III combustible fluid	Non-PCB, non-toxic, biodegradable, Class III combustible fluid	Non-PCB, non-toxic, biodegradable, Class III combustible fluid	Non-PCB, non-toxic, biodegradable, Class III combustible fluid	Non-PCB, non-toxic, biodegradable, Class III combustible fluid	Non-PCB, biodegradable, natural oil
Capacitor Connection, 3-phase	Internal delta connection	Internal delta connection	Internal wye connection	Internal delta or wye connection	Internal delta connection	Internal delta connection
Capacitance Tolerance	-0% to +15%	-0% to +15%	-0% to +15%	-0% to +15%	-0% to +15%	-5% to +10%
Discharge Device	External resistors reduce residual voltage to <50 V with in 1 minute	Internal resistors reduce residual voltage to <50 V within 1 minute	Internal resistors reduce residual voltage to <50 V within 5 minutes	Internal resistors reduce residual voltage to <50 V within 5 minutes	Internal resistors reduce residual voltage to <50 V within 1 minute	Internal resistors reduce residual voltage to <50 V within 1 minute
Total Losses	<0.5 Watts / KVAR at 60 Hertz, 25°C	<0.5 Watts / KVAR at 60 Hertz, 25°C	<0.5 Watts / KVAR at 60 Hertz, 25°C	<0.5 Watts / KVAR at 60 Hertz, 25°C	<0.5 Watts / KVAR at 60 Hertz, 25°C (without resistors)	<0.5 Watts / KVAR at 50 Hertz, 25°C (without resistors)
Design Service Life	200,000 hours continuous duty	200,000 hours continuous duty	200,000 hours continuous duty	200,000 hours continuous duty	200,000 hours continuous duty	100,000 hours (150,000 high harmonic)

CDÉ CORNELL DUBILIER

1605 E. Rodney French Blvd. Tel: 508-996-8561
New Bedford, MA 02745 Fax: 508-996-3830

sales1@cde.com
www.CDE.com

Reactive Power Compensation Capacitor Specifications (cont.)

	AMP0 Low Voltage (Three-phase and single-phase) (up to 600 VAC)	MMP0 Low Voltage (Three-phase and single-phase) (up to 600 VAC)	MMP0 Low Voltage (Three-phase and single-phase) (750 to 900 VAC)	MMP0 Medium Voltage (Three-phase and single-phase) (1040 to 4800 VAC)	EPFC Low Voltage (Three-phase) (up to 600 VAC) (60 Hz)	EPFC Low Voltage (Three-phase) (up to 525 VAC) (50 Hz)
		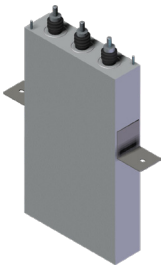	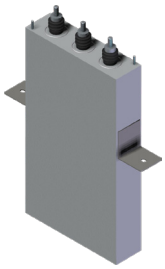			
Over Current						
Standard	135% * rated current continuous, includes harmonic currents	135% * rated current continuous, includes harmonic currents	135% * rated current continuous, includes harmonic currents	135% * rated current continuous, includes harmonic currents	135% * rated current continuous, includes harmonic currents	150% * rated current continuous, includes harmonic currents
High Harmonic	150% * rated current continuous, includes harmonic currents	150% * rated current continuous, includes harmonic currents	150% * rated current continuous, includes harmonic currents	150% * rated current continuous, includes harmonic currents	150% * rated current continuous, includes harmonic currents	200% * rated current continuous, includes harmonic currents
Over Voltage						
Standard	110% * rated voltage continuous	110% * rated voltage continuous	110% * rated voltage continuous	110% * rated voltage continuous	110% * rated voltage continuous	110% * rated (8 hrs. in every 24 hrs.)
High Harmonic	120% * rated voltage continuous	120% * rated voltage continuous	120% * rated voltage continuous	120% * rated voltage continuous	120% * rated voltage continuous	120% * rated (5 minutes in every 24 hours)

1605 E. Rodney French Blvd. Tel: 508-996-8561
New Bedford, MA 02745 Fax: 508-996-3830
sales1@cde.com
www.CDE.com

Reactive Power Compensation Capacitor Specifications (cont.)

	AMP0 Low Voltage (Three-phase and single-phase) (up to 600 VAC)	MMP0 Low Voltage (Three-phase and single-phase) (up to 600 VAC)	MMP0 Low Voltage (Three-phase and single-phase) (750 to 900 VAC)	MMP0 Medium Voltage (Three-phase and single-phase) (1040 to 4800 VAC)	EPFC Low Voltage (Three-phase) (up to 600 VAC) (60 Hz)	EPFC Low Voltage (Three-phase) (up to 525 VAC) (50 Hz)
		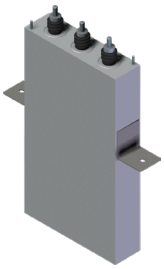	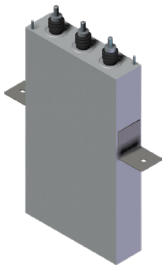			

Mechanical Characteristics

Enclosure Type	Drawn tin plated steel rectangular can	Heavy gauge welded steel construction	Heavy gauge welded steel construction	Heavy gauge welded steel construction	Extruded aluminum cylindrical can with M12 mounting stud	Extruded aluminum cylindrical can with M12 mounting stud
Finish	None (standard) Painted (optional)	Light gray paint, ANSI #61, UL approved for outdoor usage	Light gray paint, ANSI #61, UL approved for outdoor usage	Light gray paint, ANSI #61, UL approved for outdoor usage	None	None
Mounting	Optional bracketing is available	Heavy gauge brackets, mounting holes 2 x ½ x 5/8" slots	Heavy gauge brackets, mounting holes 2 x ½ x 5/8" slots	Heavy gauge brackets, mounting holes 2 x ½ x 5/8" slots	M12 mounting stud 10 NM max. torque	M12 mounting stud 10 NM max. torque
Terminals	3- and 2-terminal cover: ¼"-20 male threaded stud, 20 in-lbs fastening torque	½"-13 brass studs, 160 in-lbs fastening torque, 30 kV BIL bushing	½"-13 brass studs, 160 in-lbs fastening torque, 30 kV BIL bushing	½"-13 brass studs, 160 in-lbs fastening torque, 60 kV BIL ceramic bushings	M6 terminal 2-1/2 NM fastening torque, M8 terminal 4 NM fastening torque	3-phase terminal with electrical shock protection (finger proof)
Loss of KVAR feature	-	Optional	Optional	-	-	-

CDÉ ENERGIZING IDEAS
CORNELL DUBILIER

1605 E. Rodney French Blvd. Tel: 508-996-8561
New Bedford, MA 02745 Fax: 508-996-3830

sales1@cde.com
www.CDE.com

Reactive Power Compensation Capacitor Specifications (cont.)

	AMP0 Low Voltage (Three-phase and single-phase) (up to 600 VAC)	MMP0 Low Voltage (Three-phase and single-phase) (up to 600 VAC)	MMP0 Low Voltage (Three-phase and single-phase) (750 to 900 VAC)	MMP0 Medium Voltage (Three-phase and single-phase) (1040 to 4800 VAC)	EPFC Low Voltage (Three-phase) (up to 600 VAC) (60 Hz)	EPFC Low Voltage (Three-phase) (up to 525 VAC) (50 Hz)
		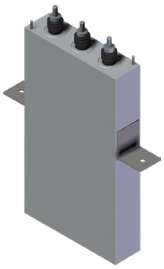	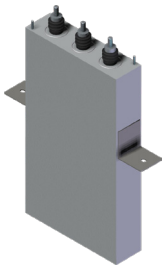			

Environmental Characteristics

Operating Temperature	-40°C to +46°C, -40°F to +115°F, with natural convection cooling	-40°C to +46°C, -40°F to +115°F, with natural convection cooling	-40°C to +46°C, -40°F to +115°F, with natural convection cooling	40°C to +46°C, -40°F to +115°F, with natural convection cooling	-40°C to +46°C, -40°F to +115°F, with natural convection cooling	-40°C to +55°C -40°F to +131°F, with natural convection cooling
Storage Temperature	-40°C to +85°C, -40°F to +185°F	-40°C to +85°C, -40°F to +185°F	-40°C to +85°C, -40°F to +185°F	-40°C to +85°C, -40°F to +185°F	-40°C to +85°C, -40°F to +185°F	-40°C to +85°C, -40°F to +185°F
Maximum Altitude	2000 meters above sea level	2000 meters above sea level	2000 meters above sea level	2000 meters above sea level	2000 meters above sea level	4000 meters above sea level
Humidity	0 to 95% non-condensing	0 to 95% non-condensing	0 to 95% non-condensing	0 to 95% non-condensing	0 to 95% non-condensing	0 to 95% non-condensing
Standards	UL 810 UL C22.2 No. 190 Canadian Standards IEC60831	UL 810 UL C22.2 No. 190 Canadian Standards ANSI/IEEE 18 NEMA CP-1 IEC60871	ANSI/IEEE 18 NEMA CP-1	ANSI/IEEE 18 NEMA IEC60871	UL 810 IEC 60831 IS13340	IS 5553 IEC 60289 IS13340
Certifications	UL Recognized CYTW2 cUL Recognized CYTW8 RoHS Compliant	UL Recognized CYTW2 cUL Recognized CYTW8	-	-	UL Recognized CYTW2 cUL Recognized CYTW8	CE
Safety Features	Pressure interrupter Self-healing technology External discharge resistors	Pressure interrupter Self-healing technology Internal discharge resistors	Pressure interrupter Self-healing technology Internal discharge resistors	Self-healing technology Internal discharge resistors	Pressure interrupter Self-healing technology Internal discharge resistors	Pressure interrupter Self-healing technology Internal discharge resistors

1605 E. Rodney French Blvd. Tel: 508-996-8561
New Bedford, MA 02745 Fax: 508-996-3830
sales1@cde.com
www.CDE.com

Mounting Orientation

All CDE power factor correction capacitors can be mounted in a vertical position with the terminals facing up or horizontally. The units should not be mounted upside down. For proper operation of the pressure interrupter, capacitors mounted in banks must have enough space between them for expansion. In cases where brackets or mounting straps are used, there should only be enough pressure on the unit to hold it in place.

Suggested Mounting Clearances

	Side to Side Clearance	Clearance above Terminals
AMP0/EPFC	0.5"	1.0"
MMP0-LV	1.5"	1.0"
MMP0-MV	1.5"	3.0"

Part Numbering System

CDE's part numbering system is a descriptive part number made up of several different components such as KVAR, voltage rating, etc. The descriptors are explained below using AMP00125F33S as a representative part number.

AMP0 012 5 F 3 3 S

TYPE
AMP0
MMP0
EPFC

WHOLE KVAR
As indicated

KVAR IN TENTHS
As indicated
(Omit if n/a)

VOLTAGE CODE 60 HZ
Standard Harmonics

D = 240 VAC	W = 1200 VAC
F = 480 VAC	J = 2400 VAC
H = 600 VAC	K = 2770 VAC
Z = 750 VAC	L = 4160 VAC
O = 900 VAC	M = 4800 VAC
B = 1040 VAC	

High Harmonics
C = 480 VAC
I = 600 VAC

VOLTAGE CODE 50 HZ
Standard Harmonics

E = 380 VAC	P = 440 VAC
G = 400 VAC	Q = 480 VAC
A = 415 VAC	R = 525 VAC

NUMBER OF PHASES
1 = single-phase
3 = three-phase

NUMBER OF TERMINALS
2 = 2 terminals
3 = 3 terminals

FACTORY CODES
N = China
S = USA
H = India

CDE ENERGIZING IDEAS
CORNELL DUBILIER
1605 E. Rodney French Blvd. Tel: 508-996-8561
New Bedford, MA 02745 Fax: 508-996-3830
sales1@cde.com
www.CDE.com

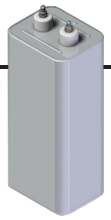

Type AMPO Capacitor Cells, 240 to 600 VAC, Three-Phase and Single-Phase

Reactive Power Compensation Rating (KVAR)

KVAR	CDE P/N	NOMINAL CURRENT (A_{RMS})	C_T NOMINAL CAPACITANCE (µF)	CAN SIZE W x L x H (in)	APPROX WEIGHT (lbs)
240 VAC, 60 Hz, 3-Phase, Delta Connection					
2.5	AMP00025D33S	6	115.1	3.75 x 4.56 x 5	3.7
5	AMP0005D33S	12	230.3	3.75 x 4.56 x 6	4.5
6	AMP0006D33S	14.4	276.3	3.75 x 4.56 x 6.38	4.7
7.5	AMP00075D33S	18	345.4	3.75 x 4.56 x 7	5.2
10	AMP0010D33S	24.1	460.4	3.75 x 4.56 x 7	5.2
12.5	AMP00125D33S	30.1	575.6	3.75 x 4.56 x 9	6.7
480 VAC, 60 Hz, 3-Phase, Delta Connection					
2.5	AMP00025F33S	3	28.8	3.75 x 4.56 x 5	3.7
5	AMP0005F33S	6	57.6	3.75 x 4.56 x 5	3.7
7.5	AMP00075F33S	9	86.3	3.75 x 4.56 x 6	4.5
10	AMP0010F33S	12	115.1	3.75 x 4.56 x 6.38	4.7
12.5	AMP00125F33S	15	143.9	3.75 x 4.56 x 6.38	4.7
15	AMP0015F33S	18	172.7	3.75 x 4.56 x 7	5.2
16.7	AMP00167F33S	20.1	191.9	3.75 x 4.56 x 7	5.2
17.5	AMP00175F33S	21	201.5	3.75 x 4.56 x 7	5.2
20	AMP0020F33S	24.1	230.3	3.75 x 4.56 x 7	5.2
22.5	AMP00225F33S	27.1	259	3.75 x 4.56 x 9	6.7
25	AMP0025F33S	30.1	287.8	3.75 x 4.56 x 9	6.7
480 VAC, High Harmonic Applications, 3-Phase, Delta Connection					
7.5	AMP00075C33S	9	86.3	3.75 x 4.56 x 6.38	4.7
10	AMP0010C33S	12	115.1	3.75 x 4.56 x 6	4.5
12.5	AMP00125C33S	15	143.9	3.75 x 4.56 x 7	5.2
15	AMP0015C33S	18	172.7	3.75 x 4.56 x 10.5	7.8
16.7	AMP00167C33S	20.1	191.9	3.75 x 4.56 x 10.5	7.8
17.5	AMP00175C33S	21.1	201.5	3.75 x 4.56 x 10.5	7.8
20	AMP0020C33S	24.1	230.3	3.75 x 4.56 x 10.5	7.8

Custom ratings and sizes available. Please contact CDE.

CDE ENERGIZING IDEAS
CORNELL DUBILIER

1605 E. Rodney French Blvd. Tel: 508-996-8561
New Bedford, MA 02745 Fax: 508-996-3830

sales1@cde.com
www.CDE.com

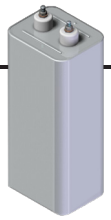

Type AMPO Capacitor Cells, 240 to 600 VAC, Three-Phase and Single-Phase (cont.)

Reactive Power Compensation Rating (KVAR)

KVAR	CDE P/N	NOMINAL CURRENT (A_{RMS})	C_T NOMINAL CAPACITANCE (µF)	CAN SIZE W x L x H (in)	APPROX WEIGHT (lbs)
600 VAC, 60 Hz, 3-Phase, Delta Connection					
2.5	AMP00025H33S	2.4	18.4	3.75 x 4.56 x 5	3.7
5	AMP0005H33S	4.8	36.8	3.75 x 4.56 x 5	3.7
7.5	AMP00075H33S	7.2	55.3	3.75 x 4.56 x 6	4.5
10	AMP0010H33S	9.6	73.7	3.75 x 4.56 x 6	4.5
12.5	AMP00125H33S	12	92.1	3.75 x 4.56 x 6	4.5
15	AMP0015H33S	14.4	110.5	3.75 x 4.56 x 6	4.5
16.7	AMP00167H33S	16.1	123.1	3.75 x 4.56 x 6	4.5
17.5	AMP00175H33S	16.8	128.9	3.75 x 4.56 x 6	4.5
20	AMP0020H33S	19.2	147.4	3.75 x 4.56 x 7	5.2
22.5	AMP00225H33S	21.7	165.8	3.75 x 4.56 x 8.63	6.4
25	AMP0025H33S	24.1	184.2	3.75 x 4.56 x 9	6.7
600 VAC, High Harmonic Applications, 3-Phase, Delta Connection					
10	AMP0010I33S	9.6	73.7	3.75 x 4.56 x 6	4.5
12.5	AMP00125I33S	12	92.1	3.75 x 4.56 x 8.25	6.2
15	AMP0015I33S	14.4	110.5	3.75 x 4.56 x 9	6.7
16.7	AMP00167I33S	16.1	123.1	3.75 x 4.56 x 9	6.7
17.5	AMP00175I33S	16.8	128.9	3.75 x 4.56 x 10.5	7.8
20	AMP0020I33S	19.2	147.4	3.75 x 4.56 x 10.5	7.8

Outline Drawings

AMPO: Suffix "33S"

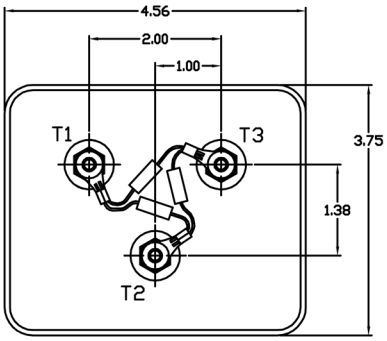

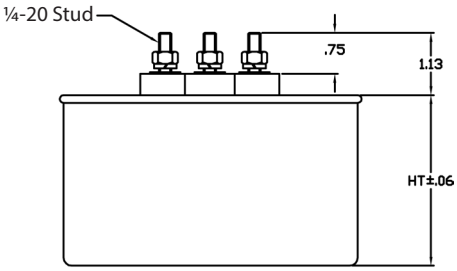

167 John Vertente Blvd.
New Bedford, MA 02745

Tel: +1-508-910-3500
Fax: +1-508-995-3000

sales1@cde.com
www.CDE.com

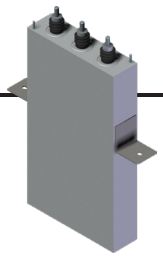

Type MMPO Capacitor Cells, 240 to 600 VAC, Three-Phase and Single-Phase

Reactive Power Compensation Rating (KVAR)

KVAR	CDE P/N	NOMINAL CURRENT (A_{RMS})	C_T NOMINAL CAPACITANCE (µF)	CAN SIZE W x L x H (in)	APPROX WEIGHT (lbs)
240 VAC, 60 Hz, 3-Phase, Delta Connection					
25	MMP0025D33	60.1	1151.3	3.75 x 13.5 x 13.5	31.3
30	MMP0030D33	72.2	1381.6	3.75 x 13.5 x 15.5	36.5
480 VAC, 60 Hz, 3-Phase, Delta Connection					
25	MMP0025F33	30.1	287.8	3.75 x 13.5 x 8.5	21.4
30	MMP0030F33	36.1	345.4	3.75 x 13.5 x 9.5	23.5
35	MMP0035F33	42.1	403	3.75 x 13.5 x 11.5	28.1
40	MMP0040F33	48.1	460.5	3.75 x 13.5 x 11.5	28.3
50	MMP0050F33	60.1	575.6	3.75 x 13.5 x 13.5	32.3
60	MMP0060F33	72.2	690.8	3.75 x 13.5 x 15.5	36.4
75	MMP0075F33	90.2	863.5	3.75 x 13.5 x 18.5	43.1
80	MMP0080F33	96.2	921	3.75 x 13.5 x 19.5	44.6
90	MMP0090F33	108.3	1036.2	3.75 x 13.5 x 20.5	45.9
100	MMP0100F33	120.3	1151.3	3.75 x 13.5 x 24	55.3
480 VAC, High Harmonic Applications, 3-Phase, Delta Connection					
25	MMP0025C33	30.1	287.8	3.75 x 13.5 x 8.5	21.4
50	MMP0050C33	60.1	575.6	3.75 x 13.5 x 13.5	32.3
75	MMP0075C33	90.2	863.5	3.75 x 13.5 x 18.5	43.1
100	MMP0100C33	120.3	1151.3	3.75 x 13.5 x 24	55.3
600 VAC, High Harmonic Applications, 3-Phase, Delta Connection					
25	MMP0025I33	24.1	184.2	3.75 x 13.5 x 8.5	21.4
30	MMP0030I33	28.9	221	3.75 x 13.5 x 9.5	23.5
35	MMP0035I33	33.7	275.9	3.75 x 13.5 x 11.5	28.1
40	MMP0040I33	38.5	294.7	3.75 x 13.5 x 11.5	28.3
45	MMP0045I33	43.3	331.6	3.75 x 13.5 x 13.5	32.2
50	MMP0050I33	48.1	368.4	3.75 x 13.5 x 13.5	32.3
60	MMP0060I33	57.7	442.1	3.75 x 13.5 x 15.5	36.4
75	MMP0075I33	72.2	552.6	3.75 x 13.5 x 18.5	43.1
80	MMP0080I33	77	589.5	3.75 x 13.5 x 19.5	44.6
90	MMP0090I33	86.6	663.1	3.75 x 13.5 x 20.5	45.9
100	MMP0100I33	96.2	736.8	3.75 x 13.5 x 24	55.3

Custom ratings and sizes available. Please contact CDE.

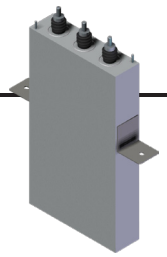

Type MMPO Capacitor Cells, 750 VAC and 900 VAC, Three-Phase and Single-Phase

Reactive Power Compensation Rating (KVAR)

KVAR	CDE P/N	NOMINAL CURRENT (A_{RMS})	C_T NOMINAL CAPACITANCE (µF)	CAN SIZE W x L x H (in)	APPROX WEIGHT (lbs)
750 VAC, 60 Hz, 3-Phase, "WYE" Connection					
100	MMP0100Z33	77	1414.7	3.75 x 13.5 x 24	55.3
900 VAC, 60 Hz, 3-Phase, "WYE" Connection					
100	MMP0100O33	64.2	982.4	3.75 x 13.5 x 20.5	49.6

Type MMPO Capacitor Cells, 1040 VAC to 4800 VAC, Three-Phase and Single-Phase

Reactive Power Compensation Rating (KVAR)

KVAR	CDE P/N	NOMINAL CURRENT (A_{RMS})	C_T NOMINAL CAPACITANCE (µF)	CAN SIZE W x L x H (in)	APPROX WEIGHT (lbs)
1040 VAC, 60 Hz, 3-Phase, Delta Connection					
25	MMP0025B33	13.9	61.3	5.63 x 13.5 x 6	20.5
75	MMP0075B33	41.6	183.9	5.63 x 13.5 x 10	34.2
100	MMP0100B33	55.6	245.2	5.63 x 13.5 x 11.5	39.3
125	MMP0125B33	69.4	306.6	5.63 x 13.5 x 13	44.5
150	MMP0150B33	83.3	367.9	5.63 x 13.5 x 15	51.3
175	MMP0175B33	97.2	429.2	5.63 x 13.5 x 17.5	59.9
200	MMP0200B33	111	490.5	5.63 x 13.5 x 20	68.4
1200 VAC, 60 Hz, 3-Phase, Delta Connection					
25	MMP0025W33	12	46.1	5.63 x 13.5 x 6	20.5
50	MMP0050W33	24.1	92.1	5.63 x 13.5 x 9	30.8
100	MMP0100W33	48.1	184.2	5.63 x 13.5 x 11.5	39.3
125	MMP0125W33	60.1	230.3	5.63 x 13.5 x 14	47.9
150	MMP0150W33	72.2	276.3	5.63 x 13.5 x 15	51.3
175	MMP0175W33	84.2	322.4	5.63 x 13.5 x 17.5	59.9
200	MMP0200W33	96.2	368.4	5.63 x 13.5 x 19	65
2400 VAC, 60 Hz, 3-Phase, Delta Connection					
25	MMP0025J33	6	11.5	5.63 x 13.5 x 6	20.5
50	MMP0050J33	12	23	5.63 x 13.5 x 7.5	25.7
75	MMP0075J33	18	34.5	5.63 x 13.5 x 10	34.2
100	MMP0100J33	24.1	46.1	5.63 x 13.5 x 11.5	39.3
125	MMP0125J33	30.1	57.6	5.63 x 13.5 x 14	47.9
150	MMP0150J33	36.1	69.1	5.63 x 13.5 x 16	54.7
175	MMP0175J33	42.1	80.6	5.63 x 13.5 x 17.5	59.9
200	MMP0200J33	48.1	92.1	5.63 x 13.5 x 19	65

Custom ratings and sizes available. Please contact CDE.

167 John Vertente Blvd.
New Bedford, MA 02745

Tel: +1-508-910-3500
Fax: +1-508-995-3000

sales1@cde.com
www.CDE.com

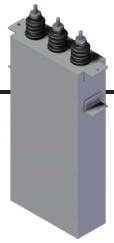

Type MMPO Capacitor Cells, 1040 VAC to 4800 VAC, Three-Phase and Single-Phase (cont.)

Reactive Power Compensation Rating (KVAR)

KVAR	CDE P/N	NOMINAL CURRENT (A_{RMS})	C_T NOMINAL CAPACITANCE (µF)	CAN SIZE W x L x H (in)	APPROX WEIGHT (lbs)
2770 VAC, 60 Hz, 3-Phase, Delta Connection					
25	MMP0025K33	5.2	8.6	5.63 x 13.5 x 7.5	25.7
50	MMP0050K33	10.4	17.3	5.63 x 13.5 x 9	30.8
75	MMP0075K33	15.6	25.9	5.63 x 13.5 x 11.5	39.3
100	MMP0100K33	20.8	34.6	5.63 x 13.5 x 15	47
125	MMP0125K33	26.1	73.2	5.63 x 13.5 x 16	54.7
150	MMP0150K33	31.3	51.9	5.63 x 13.5 x 17.5	59.9
175	MMP0175K33	36.5	60.5	5.63 x 13.5 x 19	65
200	MMP0200K33	41.7	69.1	5.63 x 13.5 x 20	68.4
4160 VAC, 60 Hz, 3-Phase, Delta Connection					
25	MMP0025L33	3.5	3.8	5.63 x 13.5 x 7.5	25.7
50	MMP0050L33	7	7.7	5.63 x 13.5 x 9	30.8
75	MMP0075L33	10.4	11.5	5.63 x 13.5 x 11.5	39.3
100	MMP0100L33	13.9	15.3	5.63 x 13.5 x 11.5	39.3
125	MMP0125L33	17.4	19.2	5.63 x 13.5 x 16	54.7
150	MMP0150L33	20.8	23	5.63 x 13.5 x 17.5	59.9
175	MMP0175L33	24.3	26.8	5.63 x 13.5 x 19	65
200	MMP0200L33	27.8	30.7	5.63 x 13.5 x 20	68.4
4800 VAC, 60 Hz, 3-Phase, Delta Connection					
25	MMP0025M33	3	2.9	5.63 x 13.5 x 7.5	25.7
50	MMP0050M33	6	4.8	5.63 x 13.5 x 9	30.8
75	MMP0075M33	9	8.6	5.63 x 13.5 x 10	34.2
100	MMP0100M33	12	11.5	5.63 x 13.5 x 11.5	39.3
125	MMP0125M33	15	14.4	5.63 x 13.5 x 16	54.7
150	MMP0150M33	18	17.3	5.63 x 13.5 x 17.5	59.9
175	MMP0175M33	21.1	20.1	5.63 x 13.5 x 17.5	59.9
200	MMP0200M33	24.1	23	5.63 x 13.5 x 20	68.4

167 John Vertente Blvd.
New Bedford, MA 02745
Tel: +1-508-910-3500
Fax: +1-508-995-3000
sales1@cde.com
www.CDE.com

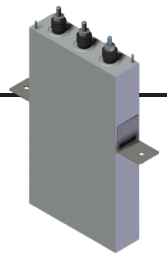

Outline Drawings

MMPO: 240, 480, 600, 750 & 900 VAC

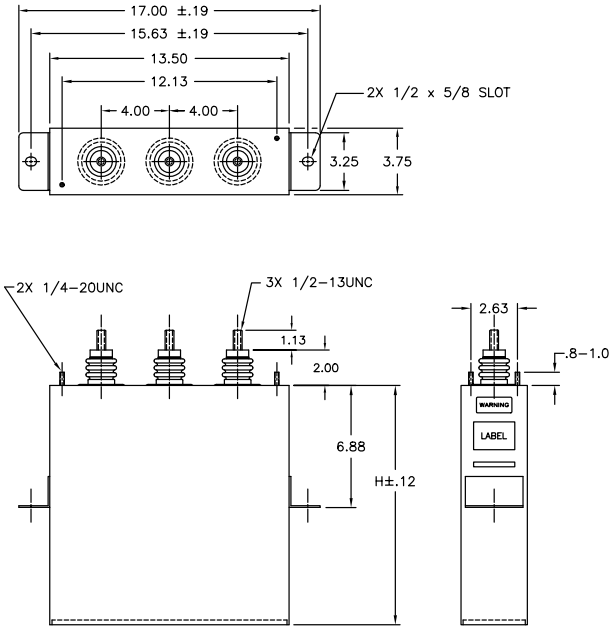

MMPO: 1040 to 4800 VAC

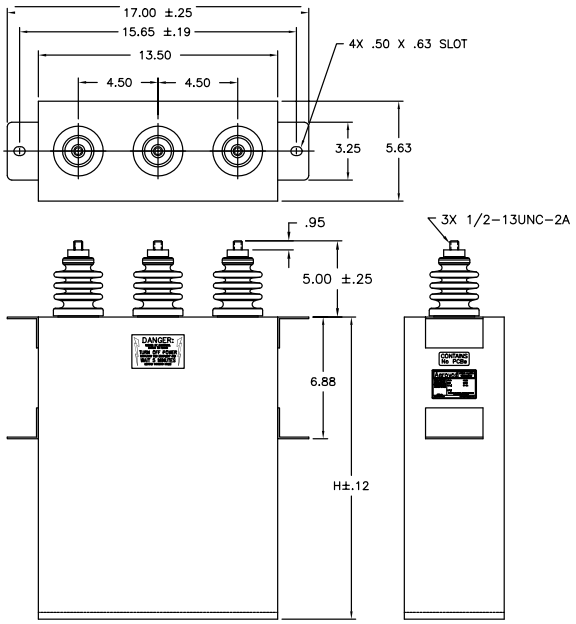

Reactive Power Compensation Rating (KVAR)

Type EPFC Capacitor Cells*

KVAR	CDE P/N	NOMINAL CURRENT (A_{RMS})	C_T NOMINAL CAPACITANCE (µF)	DIMENSIONS D x H (mm)	APPROX WEIGHT (kg)
240 VAC, 60 Hz, 3-Phase, Delta Connection					
0.5	EPFC0005D33N	1.2	23	76 x 70	0.48
1	EPFC001D33N	2.4	46.1	76 x 76	0.5
2	EPFC002D33N	4.8	92.1	76 x 140	0.78
2.5	EPFC0025D33N	6	115.1	76 x 140	0.78
3	EPFC003D33N	7.2	138.2	76 x 140	0.78
4	EPFC004D33N	9.6	184.2	86 x 115	0.9
5	EPFC005D33N	12	230.3	86 x 170	1.2
6	EPFC006D33N	14.4	276.3	86 x 170	1.2
7.5	EPFC0075D33N	18	345.4	86 x 170	1.2
10	EPFC010D33N	24.1	460.4	86 x 200	1.35
480 VAC, 60 Hz, 3-Phase, Delta Connection					
2	EPFC002F33N	2.4	23	86 x 70	0.6
7.5	EPFC0075F33N	9	86.3	86 x 170	1.15
10	EPFC010F33N	12	115.1	86 x 170	1.15
12.5	EPFC0125F33N	15	143.9	86 x 170	1.15
15	EPFC015F33N	18	172.7	86 x 200	1.35
16.7	EPFC0167F33N	20	191.9	86 x 215	1.45
17.5	EPFC0175F33N	21	201.8	86 x 245	1.6
20	EPFC020F33N	24	230.3	86 x 245	1.6
22.5	EPFC0225F33N	27	259	86 x 275	1.75
25	EPFC025F33N	30	287.8	86 x 275	1.75
30	EPFC030F33N	36	345.6	116 x 285	3.15
35	EPFC035F33N	42.1	403.2	116 x 315	3.45
40	EPFC040F33N	48.1	460.8	116 x 342	3.7
480 VAC, 60 Hz, High Harmonic Applications, 3-Phase, Delta Connection					
12.5	EPFC0125C33N	15	143.9	86 x 245	1.6
15	EPFC015C33N	18	172.7	86 x 275	1.75
16.7	EPFC0167C33N	20	191.9	86 x 305	1.9
17.5	EPFC0175C33N	21	201.5	86 x 305	1.9
20	EPFC020C33N	24	230.3	86 x 335	2.05

Custom ratings and sizes available. Please contact CDE.

167 John Vertente Blvd.
New Bedford, MA 02745

Tel: +1-508-910-3500
Fax: +1-508-995-3000

sales1@cde.com
www.CDE.com

Reactive Power Compensation Rating (KVAR)

Type EPFC Capacitor Cells

KVAR	CDE P/N	NOMINAL CURRENT (A_{RMS})	C_T NOMINAL CAPACITANCE (µF)	DIMENSIONS D x H (mm)	APPROX WEIGHT (kg)
600 VAC, 60 Hz, 3-Phase, Delta Connection					
10	EPFC010H33N	9.6	73.7	86 x 170	1.15
12.5	EPFC0125H33N	12	92.1	86 x 170	1.15
15	EPFC015H33N	14.4	110.5	86 x 200	1.35
16.7	EPFC0167H33N	16	122.8	86 x 215	1.45
17.5	EPFC0175H33N	16.8	128.9	86 x 215	1.45
20	EPFC020H33N	19.2	147.4	86 x 245	1.6
22.5	EPFC0225H33N	21.6	165.8	86 x 275	1.75
25	EPFC025H33N	24	184.2	86 x 275	1.75
30	EPFC030H33N	28.8	219.9	116 x 285	2.95
35	EPFC035H33N	33.6	258	116 x 315	3.25
40	EPFC040H33N	38.4	294.9	116 x 342	3.7
600 VAC, 60 Hz, 3-Phase, Delta Connection					
10	EPFC010I33N	9.6	73.7	86 x 200	1.35
12.5	EPFC0125I33N	12	92.1	86 x 245	1.6
15	EPFC015I33N	14.4	110.5	86 x 245	1.6
16.7	EPFC0167I33N	16	122.8	86 x 275	1.75
17.5	EPFC0175I33N	16.8	128.9	86 x 275	1.75
20	EPFC020I33N	19.2	147.4	86 x 305	1.9
25	EPFC025I33N	24.1	184.4	116 x 315	3.5

*Made in China

Outline Drawings

EPFC: 240 to 600 VAC

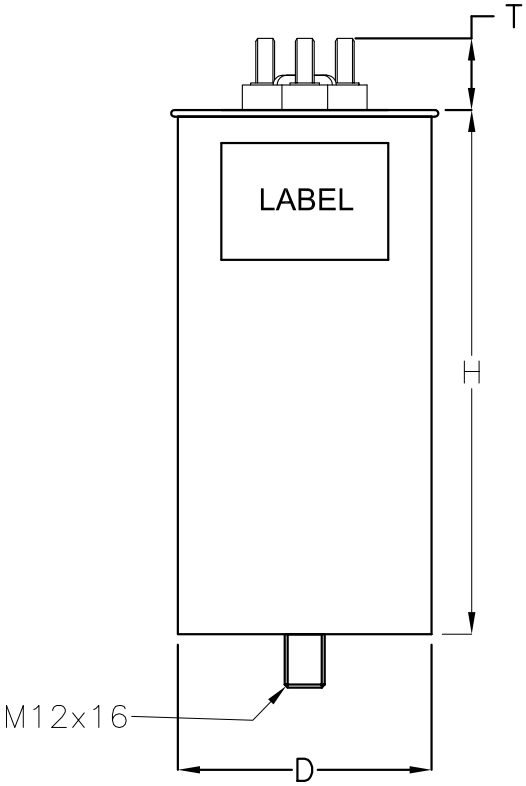

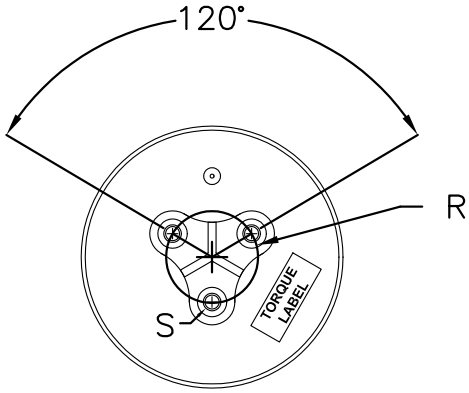

ALL DIMENSIONS IN MILLIMETERS

	D	
	76 or 86	116
S	M6 STUD	M8 STUD
R	14	20
T	24	27.5

Reactive Power Compensation Rating (KVAR)
CDE 50 Hz EPFC*

KVAR	CDE P/N	NOMINAL CURRENT (A_{RMS})	C_T NOMINAL CAPACITANCE (µF)	CAN SIZE D x H (mm)	APPROX WEIGHT (kg)
400 VAC, 50 Hz, 3-Phase Delta Connection					
2	EPFC002G33H	2.88	39.8	75 x 175	0.91
2.5	EPFC0025G33H	3.6	49.7	75 x 175	0.91
5	EPFC005G33H	7.2	99.5	75 x 175	0.91
7.5	EPFC0075G33H	10.8	149.2	75 x 210	1.08
10	EPFC010G33H	14.4	198.9	85 x 210	1.45
12.5	EPFC0125G33H	18	248.7	95 x 210	1.36
15	EPFC015G33H	21.6	298.4	95 x 210	1.36
20	EPFC020G33H	28.9	397.9	95 x 247	1.93
25	EPFC025G33H	36.1	497.4	116 x 247	2.81
30	EPFC030G33H	43.3	596.8	116 x 247	2.81
50	EPFC050G33H	72.2	994.7	116 x 353	3
415 VAC, 50 Hz, 3-Phase Delta Connection					
2	EPFC002A33H	2.8	37	75 x 175	0.91
5	EPFC005A33H	7	92.4	75 x 175	0.91
7.5	EPFC0075A33H	10.4	138.6	75 x 210	1.08
10	EPFC010A33H	13.9	184.8	75 x 210	1.08
12.5	EPFC0125A33H	17.4	231	85 x 210	1.45
15	EPFC015A33H	20.9	277.2	95 x 210	1.36
20	EPFC020A33H	27.8	369.6	95 x 247	1.93
25	EPFC025A33H	34.8	462.1	116 x 247	2.81
30	EPFC030A33H	41.7	554.5	116 x 247	2.81
50	EPFC050A33H	69.6	924.1	116 x 353	3
440 VAC, 50 Hz, 3-Phase Delta Connection					
2	EPFC002P33H	2.6	32.9	75 x 175	0.91
2.5	EPFC0025P33H	3.3	41.1	75 x 175	0.91
5	EPFC005P33H	6.6	82.2	75 x 175	0.91
7.5	EPFC0075P33H	9.8	123.3	75 x 175	0.91
10	EPFC010P33H	13.1	164.4	75 x 210	1.1
12.5	EPFC0125P33H	16.4	205.5	85 x 210	1.16
15	EPFC015P33H	19.7	246.6	95 x 210	1.36
20	EPFC020P33H	26.2	328.8	95 x 247	1.93
25	EPFC030P33H	32.8	411	116 x 210	2.4
30	EPFC030P33H	39.4	493.2	116 x 247	2.81
50	EPFC050P33H	65.6	822.1	116 x 353	3

Custom ratings and sizes available. Please contact CDE.

167 John Vertente Blvd.
New Bedford, MA 02745

Tel: +1-508-910-3500
Fax: +1-508-995-3000

sales1@cde.com
www.CDE.com

Reactive Power Compensation Rating (KVAR)

KVAR	CDE P/N	NOMINAL CURRENT (A_{RMS})	C_T NOMINAL CAPACITANCE (µF)	CAN SIZE D x H (mm)	APPROX WEIGHT (kg)
480 VAC, 50 Hz, 3-Phase Delta Connection					
5	EPFC005Q33H	6	69.1	75 x 175	0.94
7.5	EPFC0075Q33H	9	103.6	75 x 210	1.08
10	EPFC010Q33H	12	138.2	85 x 210	1.41
12.5	EPFC0125Q33H	15	172.7	95 x 210	1.36
15	EPFC015Q33H	18	207.2	95 x 247	1.93
20	EPFC020Q33H	24.1	276.3	95 x 247	1.93
25	EPFC025Q33H	30.1	345.4	116 x 247	2.81
525 VAC, 50 Hz, 3-Phase Delta Connection					
5	EPFC005R33H	5.5	57.7	75 x 175	0.96
7.5	EPFC0075R33H	8.2	86.6	75 x 210	1.11
10	EPFC010R33H	11	115.5	95 x 210	1.36
12.5	EPFC0125R33H	13.8	144.4	95 x 247	1.93
15	EPFC015R33H	16.5	173.2	95 x 247	1.93
20	EPFC020R33H	22	231	116 x 247	2.81
25	EPFC025R33H	27.5	288.7	136 x 247	2.99

*Made in India

Outline Drawings

EPFC: 400 to 525 VAC

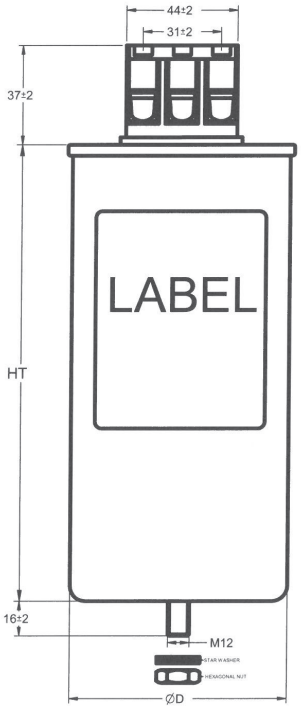

Different terminal options available upon request.

CD Aero
A Division of Cornell Dubilier Electronics, Inc.
167 John Vertente Blvd.
New Bedford, MA 02745
Tel: +1-508-910-3500
Fax: +1-508-995-3000
sales1@cde.com
www.CDE.com

Capacitor Fundamentals

A capacitor is two conducting surfaces isolated from each other by insulating material called dielectric material. The capacitor is designed to be an electrical device characterized by its capacity to store an electrical charge and to be a passive electrical component that has two terminals. These terminals have a potential difference because of the stored charges in the capacitor. The effect of the capacitor in the electrical field is known as capacitance.

The Capacitance: a capacitance is the ratio of the electrical stored charge in the capacitor to the electrical potential on the terminals of the capacitor.

$$Q = CV$$

$$E = \frac{1}{2}CV^2$$

$$E = \frac{1}{2}QV$$

Capacitance Unit

The unit of capacitance is the Farad which refers to the English scientist Michael Faraday who studied the electromagnetic field and static electricity. This research helped him to discover the effect of capacitors in an electrical circuit.

1 Farad = 1 coulomb/volt

Farad means: The effect of the capacitor (capacitance) in the electrical circuit which requires a charge of 1 coulomb to create a potential difference of 1 volt between the plates of the capacitor.

Capacitors are reactive devices, so they give different impedances in the electrical circuits depending on the frequency and voltage applied to them. For practical applications, capacitance is much less than a farad. More typically, one will see values of:

1 Pico farad (1pF) = 10^{-12} farad
1 Nano farad (1nF) = 10^{-9} farad
1 Micro farad (1µF) = 10^{-6} farad

Capacitance Calculations

fluxdensity $B = \frac{Q}{A}$

electrical field intensity $E = \frac{V}{d}$

$$B = \varepsilon E$$

$$\frac{Q}{A} = \frac{\varepsilon V}{d} \rightarrow C = \frac{Q}{V} = \frac{\varepsilon A}{d}$$

$$C = \varepsilon_0 \varepsilon_r \cdot \frac{A}{d} \rightarrow \varepsilon = \varepsilon_0 \varepsilon_r$$

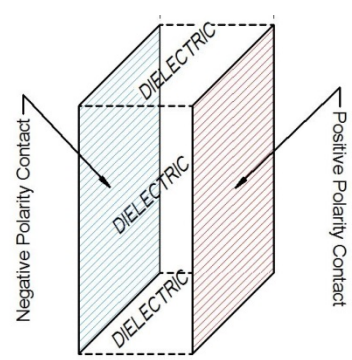

Fig. 3

ε_0: Permittivity of free space (8.854 pF/meter)

ε_r: Relative dielectric constant (unit-less)

A: Area of the plates (m^2)

d: dielectric thickness (mm)

The Equivalent Capacitors

In Series:

$$I_T = I_1 + I_2 + I_3 + \ ...$$

$$Q_T = Q_1 + Q_2 + Q_3 + \ ...$$

$$VT = \frac{Q_T}{C_T}$$

$$VT = V_1 + V_2 + V_3 + \ ...$$

$$VT = \frac{Q}{C_1} + \frac{Q}{C_2} + \frac{Q}{C_3} + \ ...$$

$$VT = \left(\frac{I}{C_1} + \frac{I}{C_2} + \frac{I}{C_3} + \ ...\right)$$

$$C_T = \sum_{i=1}^{n} \frac{I}{C_i}$$

if two caps. connected in series

$$C_T = \frac{C}{2}$$

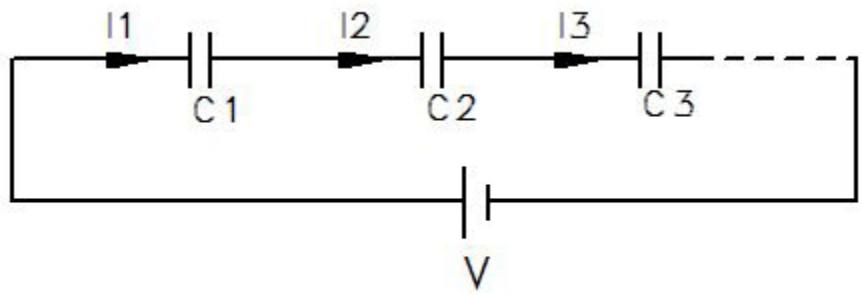

Fig 4

I_T: total current
I_1: current for capacitor (1)
I_2: current for capacitor (2)
Q_T: total charge
Q_1, Q_2, Q_3 : the charge for each cap.
V_T: total voltage

In Parallel:

$$V_1 = V_2 = V_3 = \ ... V_n = V_T$$

$$I_T = I_1 + I_2 + I_3 + \ ... + I_n$$

$$Q_T = Q_1 + Q_2 + Q_3 + \ ... + Q_n$$

$$Q_T = C_T V_T$$

$$Q_T = C_1 V_1 + C_2 V_2 + C_3 V_3 + \ ... + C_n V_n$$

$$Q_T = (C_1 + C_2 + C_3 + \ ... + C_n)V$$

$$C_T = C_1 + C_2 + C_3 + \ ... + C_n$$

$$C_T = \sum_{i=1}^{n} C_i$$

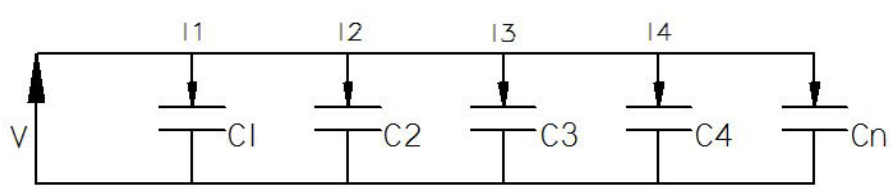

Fig 5

Schematic Circuit for the Capacitor

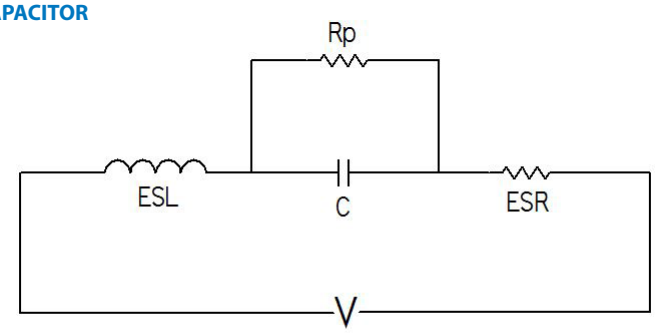

Fig 6

R_p: capacitor leakage resistance
ESR: Equivalent series resistance
ESL: Equivalent series inductance
C: Equivalent series capacitance

Capacitive Reactance (Xc)

The capacitive reactance is the effect of the capacitor in the electrical circuit.

$$X_c = \frac{1}{\omega C} = \frac{1}{2\pi f C}$$

$\omega = 2\pi f$

AC Capacitor

An AC capacitor must care about the:

1. Phase shift between the voltage and the current of the capacitor. For the ideal capacitor the phase shift will be 90 °, but because of the effects of ESR and ESL, the phase shift will be less than 90 °. The difference between the phase angle 0 and 90 ° is δ (loss angle), and can be measured through the dissipation power factor.

2. Resonance frequency

Dissipation Factor (DF)

Is the ratio of the ESR and (Xc) it is also known as a tangent of the loss angle (δ). This factor is:

$$DF = \frac{I^2 \cdot ESR}{I^2 \cdot |X_c|} = \omega_c \cdot ESR$$

$$tan\delta = \frac{ESR}{|X_c|} = DF$$

$$ESR = tan\delta - \frac{1}{2\pi f C}$$

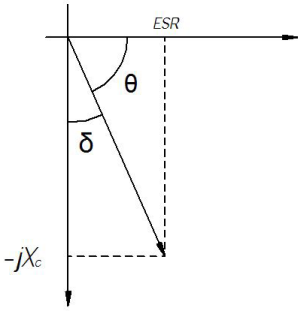

Fig 7

I : root mean square value for the rated capacitor current
ESR: Equivalent series resistance
δ: losses angle between ESR & Xc

At the same time:
The dissipation factor is the ratio of losses power to the reactive power of the capacitor.

$$tan\delta = \frac{P_{lossed}}{2\pi \cdot f \cdot C \cdot V^2}$$

P_{lossed} : real power lossed in ESR
tanδ: tangent for the losses angle between the ESR and Xc
f : frequency of the power supply
V: rated voltage on the capacitor
C: capacitance of the capacitor

2. Resonance frequency:
From the schematic circuit for the capacitor the impedance of the capacitor (Z)

$$\boxed{Z = \sqrt{(ESR)^2 + \left(2\pi \cdot f \cdot ESL - \frac{1}{2\pi \cdot f \cdot C}\right)^2}}$$

When the capacitive reactance equal to inductive reactance the impedance (Z) will equal ESR then the resonance frequency occurs

$XL_c = XC_c$

$$2\pi \cdot f_{res} \cdot ESL = \frac{1}{2\pi \cdot f_{res} \cdot C}$$

$$1 = (2\pi)^2 \cdot ESL \cdot C \cdot (f_{res})^2$$

$$f_{res} = \frac{1}{2\pi\sqrt{ESL \cdot C}}$$

Z: capacitor impedance
ESR: equivalent series resistance
f: frequency of the applied voltage on the capacitor terminals
ESL: equivalent series inductance
C: the capacitance
XL_c: equivalent inductance reactor of the capacitor
Xc: equivalent capacitive reactor of the capacitor

-

Equations for Power Factor Correction and Harmonic Distortion (Balanced Phase Loads)

Capacitors in Parallel

$$C_T = C_1 + C_2 + C_3 + \cdots C_n = \sum_{i=1}^{n} C_i$$

Capacitors in Series

$$\frac{1}{C_T} = \frac{1}{C_1} + \frac{1}{C_2} + \frac{1}{C_3} + \cdots \frac{1}{C_n} = \sum_{i=1}^{n} \frac{1}{C_i}$$

$$DF = Tan(\delta) = \frac{ESR}{X_C} = (2\pi f)(C)(ESR)$$

$$\text{Power Loss} = (2\pi f)(C \times V^2)(DF)$$

$$X_C = \frac{1}{(2\pi f)C}$$

$$C_T = \frac{KVAR \times 10^{-3}}{(2\pi f)(KV)^2}$$

$$KW \text{ (Motor Input)} = \frac{hp \times 0.746}{\%\text{Eff}}$$

$$KVA = \frac{KW}{PF} = \sqrt{(KW)^2 + (KVAR)^2}$$

$$KVAR = \frac{2\pi \times f \times C \times (KV)^2}{10^{-3}}$$

$$KVAR_E = KVAR_R \times \left[\frac{V_A}{V_R}\right]^2 \times \left[\frac{f_A}{f_R}\right]$$

$$KVAR = \frac{hp \times 0.746}{\eta}\left[\sqrt{\frac{1 - PF_0^2}{PF_0^2}} - \sqrt{\frac{1 - PF_0^2}{PF_T^2}}\right]$$

$$KVA = \frac{V_L \times I_L}{1000} \quad \text{Single-Phase}$$

$$KVA = \frac{\sqrt{3} \times V_L \times I_L}{1000} \quad \text{Three-Phase}$$

$$I_{RMS} = \sqrt{I_1^2 + \sum_{h=2}^{\infty} I_h^2}$$

Legend

K	1000
W	Watts
V	Volts
A	Amperes
hp	Horsepower
C	Capacitance (Farads)
PF	Power Factor
KW	Working Power (1000 Watts)
KVA	Total Power (1000 Volt-Amperes)
KVAR	Reactive Power (1000 Volt-Amperes Reactive)
δ	Loss Angle
V_L	Line Voltage
I_L	Line current
f	Frequency
$KVAR_E$	Effective KVAR
$KVAR_R$	Rated KVAR

KVAR De-rating for Voltage & Frequency

V_A	Applied line Voltage
V_R	Rated line voltage
f_A	Applied frequency
f_R	Rated frequency
η	Motor efficiency
PF_0	Initial Power Factor
PF_T	Target Power Factor
I_{RMS}	Root-mean-square value of current
I_1	Current at fundamental frequency
I_h	Harmonic current of order h
C_T	Total capacitance (Farads)
X_c	Capacitor reactance
I_{ph}	Phase current
DF	Dissipation Factor
ESR	Equivalent Series Resistances (Ohms)

Connection Types

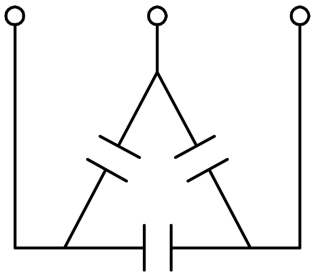

Delta Connection

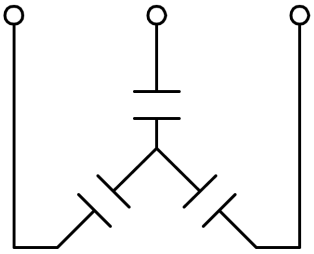

Wye Connection

Why Do You Need Power Factor Correction?

Power Factor Correction capacitors (PFCs) save power in an electric power system, and the savings can be substantial. PFCs do this by helping filter the harmonics load in the power system, which allows more efficient usage of utility power and reduces the amount of current lost. More useful power is transferred to the power system without requiring larger wiring or more robust equipment.

If a power system is receiving "dirty" power (fluctuations, harmonic dissonance, etc.) the PFC capacitor can filter these out and the capacitor will not fail. Use of PFC capacitors in industrial or manufacturing settings results in significant cost savings and longer equipment life. The efficient use of power also means the utility grid can avoid building additional power generators, saving capital cost, specifically in emerging markets.

How Does Power Factor Correction Work?

Electric power has two components:

1) Active power which produces work.

2) Reactive power, which is needed to generate the magnetic fields required for the operation of inductive electrical equipment, but performs no useful work.

Active (or "real") power is measured in KW (1000 Watts)

Reactive power is measured in KVAR (1000 Volt-Amperes Reactive)

Total (or "apparent") power is measured in KVA (1000 Volt-Amperes)

The ratio of working power to total power is called power factor.

$$PF = \frac{\text{Real Power}}{\text{Apparent Power}} \quad \begin{matrix}\text{(expressed in Watts)} \\ \text{(expressed in VA)}\end{matrix}$$

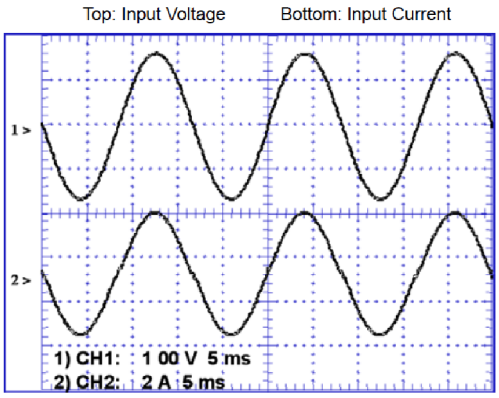

Power factor correction capacitors increase the power factor by supplying reactive power when installed at or near inductive electrical equipment. Ideally, the electrical load (motor, lights, etc.) should emulate a resistor, in which case, the reactive power is zero. The goal is to have a perfect sinewave of the current match the voltage.

Power Factor Correction Capacitors Save Money — So Keep Them Serviced!

Power factor correction capacitors lower electrical costs in two ways:

1) In many areas, the electrical rate includes a penalty charge when you have low power factor. Installing power factor capacitors on a facility's electrical distribution system makes it unnecessary for the utility to supply the reactive power which would otherwise be required by inductive electrical equipment. The savings the utility realizes in reduced generation, transmission, and distribution costs are passed onto the customer in the form of lower electrical bills.

2) The second source of savings realized by using power factor correction capacitors is in the form of increased KVA capacity in your electrical distribution system. Installing capacitors to furnish the non-productive current requirements of the facility makes it possible to increase the connected load as much as 20% without a corresponding increase in the size of the transformers, conductors, and protective devices in the distribution system which services the load.

What Can Go Wrong?

Without regular monitoring and maintenance of your PFC system, the system may not perform optimally, or worse, it may be headed for a breakdown. Issues can range from a non-ideal power factor to catastrophic failure of the entire PFC system. The capacitors and reactors could be severely damaged or destroyed. This could result in a full power down of the facility which will put your business lines down ($$$$). By maintaining the PFC system this can be avoided, and keep expensive replacement costs in check.

Safety Is Always First

Before working on any power factor system, make certain it is disconnected from the main power source, and that the output of the system is also disconnected. This ensures nothing is being fed backward through the system.

Also confirm the capacitors are discharged before disconnecting or adjusting any cabling or equipment. (PFC capacitors have discharge resistors to prevent shock, but manually checking that the capacitors did indeed discharge is always good practice.)

In the event testing needs to be completed while the PFC system is active, use extreme caution. Check that current transformers (CTs) are connected, as an open CT will create high voltage and could damage equipment as well as cause serious injury.

Where Should We Start?

Begin by performing a complete visual inspection of the system. This is a quick check to ensure the switches are working and the

capacitor banks are also working properly.

- Look for discolored components, bulging and/or leaking capacitors and signs of heating and/or moisture. Bulging in a capacitor is a telltale sign that it is at the end of its life.
- Check reactors for discolored cabling or cases.
- Check that fans are free of debris and in proper working order.
- Check the PFC controller and manually step through connecting each capacitor bank.
- Check the PFC % and ensure the phases are balanced.

Checking for Hot Spots

Thermal imaging is a great tool to evaluate an electrical system's performance. Imaging will need to be completed with the system running, so ensure you are following proper safety procedures first. Get your thermal imaging information where the wiring connections are to the capacitors and reactors - this includes the terminals of the capacitors.

- Check the capacitors for hot spots as well as the reactors. To do this, you will need to confirm the capacitors and reactors you are monitoring are live. There are usually manual settings from the PFC control to connect the components.
- Check specifically for temperature differences between phases of more than 7° C.
- Check that the spacing between capacitors is appropriate – 2 cm. minimum is usually standard. If there is forced air in your system, ensure the flow is appropriate and this is not causing heat transfer from one component to the next.
- If cabling or terminal heating is abnormal, ensure terminals are tightened to the appropriate torque, and that cables are not worn. Power down the system before adjusting.

Check Capacitance

Depending on the system, you will want to power down and make certain any three phase transformers are disconnected to ensure the proper measurement of the capacitor. Also, check that the capacitors are discharged before measuring capacitance. A charged capacitor can cause shock and/or damage to the equipment otherwise.

- Check the voltage across the capacitor phase-to-phase as well as phase-to-neutral. The voltage across the capacitors should be zero.
- Check the capacitance per the configuration Y, delta, and neutral connected. All phases of the capacitor should read within a single digit % of each other. A larger capacitance difference between phases is cause for further investigation.
- It is also good practice to measure the capacitance at more than one frequency.

Check Current

Checking current will need to be completed with a live system, so exercise caution.

- Using a current clamp CT, a best practice is to measure the current through the PFC system's current transformer and calculate the current on the line (this measurement can be used to validate the PFC panel).

- The CT ratio should be multiplied by the current measurement to calculate the current through the line/phase of the capacitor. The current measured will be the RMS (Root Mean Square) current through the capacitor (this current includes harmonics). Ensure the RMS current is acceptable for the capacitor rating and design.

Each current measurement on each phase should be within a single digit percentage of one another. Any phase imbalance will require deeper investigation.

- If the CT current is in question (measurement is high or low), measuring the line current for each phase into the capacitor would be the next step. As the current is much higher in the line than on the PFC system's current transformer, ensure the current clamp and meters are configured so as to measure the higher current.

Check Voltage

A check of the voltage will also need to be completed with a live system (use caution).

- Check the RMS voltage for each phase measuring from phase-to-phase and also phase-to-neutral.
- Check that your voltage measurements comply with the capacitor design limits. Each phase should be within a single percent of one another. Any phase imbalance will require further investigation.

Take a Deeper Dive — Harmonics and Transients

If the RMS measurements were within specifications, a study of the current and voltage harmonics would be a good idea. This will help you to understand power fluctuations due to transient loads from variable speed drives and any other nonlinear loads. Checking for systems tuned to harmonics is also a best practice when troubleshooting a faulty PFC system.

In Conclusion, Continued, Regular Maintenance

Yearly visual inspection of the PFC system is a good practice to certify the system is in good working order. It can become quite costly if routine maintenance is not completed as the cabling, capacitors and reactors may become damaged and require replacement. By maintaining the PFC system this can be avoided the expensive cost of replacement can be kept in check.

About CDE

CDE is a leading provider of film capacitors for industrial, medical and specialized applications serving original equipment manufacturers (OEM) and distributors. The company has world-class design, manufacturing and testing facilities in New Bedford, Massachusetts and global manufacturing facilities in China and India to enable quick turn-around for shipping and delivery worldwide.

CDE capacitors are among the world's most reliable components. Our extensive custom design and development capabilities coupled with broad, standardized product offerings allow us to provide intelligent capacitor solutions that meet or exceed our customers' application requirements.

Our aim is to be the best and most sought after provider of capacitor solutions for specialty markets.

CD Aero

A Division of Cornell Dubilier Electronics, Inc.

CDE Corp.
167 John Vertente Blvd.
New Bedford, MA 02745
Tel: +1-508-910-3500
Fax: +1-508-995-3000
www.CDE.com

Copyright 2017, CDE Corp. All rights reserved.
CDE is a registered trademark and AeroPower is a trademark of CDE Corp.

PF01704 Printed in the USA

CDE

AeroPower™ Power Factor Correction Capacitors

SINGLE-PHASE AND THREE-PHASE PFC CAPACITORS FOR HIGH RELIABILITY APPLICATIONS

Intelligent Capacitor Solutions

AeroPower™ power factor correction capacitors are constructed using high quality materials and Lean Six Sigma manufacturing practices to provide reliable performance and long life during continuous use.

Cornell Dubilier capacitors undergo 100% electrical and visual testing to further ensure high level performance. If you have specialized needs, our flexible manufacturing processes allow us to quickly provide custom configurations.

CONTENTS

General Information 3

Construction 4

Harmonic Distortion 4

Cover Terminals 5

Specifications: AMP0, MMP0 and EPFC Capacitors 7

Safety Features 11

Mounting Orientation 11

Part Numbering System 11

Ratings Tables & Drawings: AMP0, MMP0 and EPFC Capacitors 12

Capacitor Fundarmentals 23

Equations for Reactive Compensation and Harmonic Distortion 27

PFC Capacitor Care, Troubleshooting and Common Issues 29

CDE provides intelligent capacitor solutions.

AeroPower™ Power Factor Correction Capacitors

SINGLE-PHASE AND THREE-PHASE PFC CAPACITORS FOR HIGH RELIABILITY APPLICATIONS

CDE manufactures both single-phase and three-phase power factor correction capacitors up to 4,800 VAC. Our AeroPower brand PFC capacitors are designed for high reliability applications, and have a life rating of over 200,000 hours. They are designed to withstand harmonic currents, with special high harmonic versions available.

Three types of standard reactive compensation capacitors are available:

- AMP0: Vacuum-impregnated metallized polypropylene, compact size. Available in both oil-filled and dry configurations. (Made in USA.)
- MMP0: Vacuum-impregnated metallized polypropylene, rugged welded case. (Made in USA.)
- EPFC: Euro-style vacuum-impregnated metallized polypropylene, round aluminum studded case. (Made in China and India.)

Highlights

- Both European and North American styles available
- Long life
- Over-current rating to 150% (200% for 50 Hz EPFC)
- Over-voltage rating to 120%
- Includes discharge resistors
- Large 325 KVAR capacitors available
- Single-phase and three-phase
- Loss of KVAR/fault detection
- Oil or epoxy filled versions available

Applications

- Power Factor Correction Systems
- Harmonic Filters
- Alternative Energy Power Systems
- Induction Heating Capacitor Alternatives

Custom ratings and sizes are available. Please contact CDE.

Specifications

KVAR Range:	0.5 to 325 KVAR
Capacitance Tolerance:	0 to +15%
AC Voltage Range:	240 VAC to 4,800 VAC; single-phase or three-phase
Rated Frequency:	50 or 60 Hz
Capacitor Connection:	3-phase, internal delta connection standard; wye available on request
Operating Life:	100,000–200,000+ hours
Total Losses:	<0.5 Watts / KVAR at 60 Hertz, 25°C
Operating Temperature Range:	-40°C to +55°C
Approval Certification:	UL, cUL (≤600 VAC)
Humidity Standards:	0 to 95%, non-condensing UL 810,UL C22.2, ANSI/IEEE 18, NEMA CP-1, IEC 60871-1, IEC 60831 and IS 13340

CDE CORNELL DUBILIER
ENERGIZING IDEAS

1605 E. Rodney French Blvd. Tel: 508-996-8561 sales1@cde.com
New Bedford, MA 02745 Fax: 508-996-3830 www.CDE.com

Standard Voltage and KVAR Ratings at 60 Hertz*

LOW VOLTAGE	AMP0	EPFC	MMP0
240 VAC	0.5–10	0.5–10	20–30
480 VAC	0.5–25	2–40	25–100
600 VAC	1.0–25	10–40	25–100
750 VAC	–	–	25–150

MEDIUM VOLTAGE	MMP0
900 VAC	25–150
1040 VAC	25–240
1200 VAC	25–240
2400 VAC	25–300
2770 VAC	25–300
4160 VAC	25–300
4800 VAC	25–325

Standard Voltage and KVAR Ratings at 50 Hertz

LOW VOLTAGE	EPFC
400 VAC	2–50
415 VAC	2–50
440 VAC	2–50
480 VAC	5–25
525 VAC	5–25

*Please consult the factory for other voltages, frequencies and KVAR ratings.

Construction

All AeroPower capacitors are impregnated with either a dielectric fluid or an epoxy resin to give added insulation, excellent corona protection and a moisture barrier. The dielectric fluid and the epoxy resin are considered a green (benign), environmentally friendly material. MMP0 and EPFC capacitors are 100% leak tested. CDE products do not contain PCBs.

Harmonic Distortion

Harmonic distortion is the resulting non-sinusoidal current waveform generated by a non-linear load. The most common non-linear load is a pulse rectifier, which is used in most switch mode power supplies, variable speed drives and uninterruptible power supplies. The distorted current waveform generates a distorted source voltage due to the system (electrical power system) impedance. A distorted waveform can be analyzed by decomposing it into a fundamental component (line frequency) and higher frequency components of varying amplitude.

The effects of harmonic distortion on metallized film capacitors are (1) higher operating temperature because of higher I^2R losses and (2) higher voltage stress on the dielectric. Both of these factors will shorten the life of a capacitor dramatically.

All CDE power factor correction capacitors are designed to handle harmonic currents, however, CDE also offers capacitors that are custom designed for systems with high harmonic distortion. By using our high-harmonic capacitors in your harmonic rich application, you will have a more robust construction compared to using standard capacitors in the same application.

1605 E. Rodney French Blvd. Tel: 508-996-8561
New Bedford, MA 02745 Fax: 508-996-3830
sales1@cde.com
www.CDE.com

Cover Terminals

AMP0 and low voltage MMP0 cells are available in a three-terminal configuration, specified by KVAR rating (see individual specifications). The internal schematics for these terminal configurations are shown in Figures 1A and 1B.

Figure 1A: AMP0

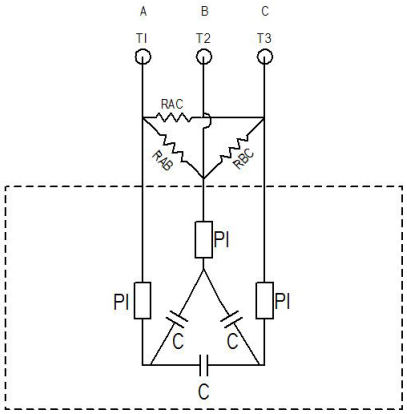

Figure 1B: EPFC & Low Voltage MMP0

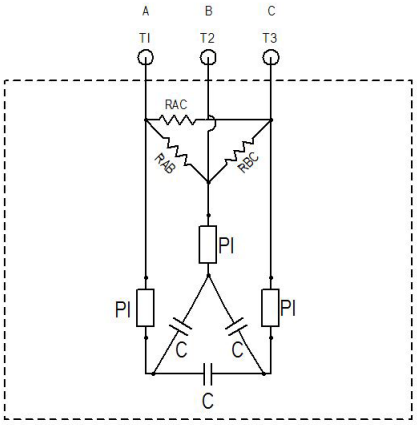

Internal Schematics for Low Voltage
Three-Terminal Capacitors

The schematics for 3-phase AMP0 bank caps

T1: The first terminal of the cap.
T2: The second terminal
T3: The third terminal
PI: Over pressure interuptor, mechanical fuse
C: The capacitor for each phase.

The schematics for 3-phase EPFC & MMP0 bank caps

RAB: The discharge resistor between terminals A & B
RAC: The discharge resistor between terminals A & C
RBC: The discharge resistor between terminals B & C

The Calculation of the 3 Phase Delta Connection Power Factor Capacitor

$Q_{c\Delta} = 3Q_{cph}$ ➔(1)

$Q_{c\Delta} = 3I_cV_c$ ➔(2)

$I_c = \frac{IL}{\sqrt{3}}$

$Q_{c\Delta} = \sqrt{3}$ ILVL ➔(3)

$Q_{c\Delta} = \frac{3V_{cph}^2}{X_{cph}}$ ➔$Q_{c\Delta} = 3W_{cph} \cdot V_{cph}^2$

$C_{ph} = \frac{Q_{c\Delta}}{3WV_{cph}}$ ➔(4)

$V_c = VL$

$Q_{c\Delta} = \frac{VL^2}{X_{line}}$

$\frac{3V_{cph}^2}{X_{cph}} = \frac{VL^2}{X_{line}}$ ➔ $\frac{3}{X_{cph}} = \frac{1}{X_{line}}$

$W \cdot C_{line} = 3W \cdot C_{ph}$

$C_{line} = 3C_{ph}$, $\boxed{Q_{c\Delta} = 3 \cdot W \cdot C_{ph} \cdot V_c^2}$

$\boxed{C_{line} = \frac{Q_{c\Delta}}{WV_c^2}}$

$Q_{c\Delta}$: Capacitive reative power for the 3 Phase Delta

$Q_{cph.}$: Capacitive reative power for each phase of the 3 Phase Delta

I_c: Phase capacitor current

I_L: Line current

$V_{cph.}$: Voltage for each phase capacitor

$X_{cph.}$: Capacitive Reactance for each phase

$C_{ph.}$: Capacitance for each phase

X_{line}: Line capacitive reactance

C_{line}: Line capacitance

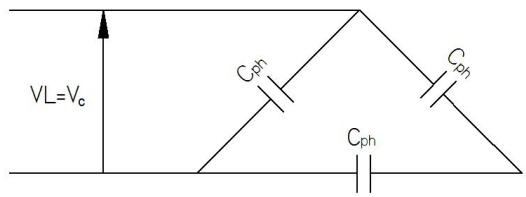

Figure (2)

Safety Features

Discharge resistors are placed internally on MMP0 and EPFC capacitors and externally on AMP0 capacitor cells. The resistors are a safety feature that drains the voltage on the capacitor once the unit is taken offline to less than 50 volts in one minute or less for cells rated up to 600 Vac, or in 5 minutes or less for cells rated over 600 Vac. The resistors are sized for long life continuous operation at maximum rated temperature. CDE low voltage capacitor cells have UL and cUL recognized pressure sensitive circuit interrupters. The circuit interrupter's purpose is to safely remove the capacitor from service at end-of-life or under heavy fault conditions and still maintain case integrity. CDE low voltage capacitor cells are listed for use with or without fuses at 10,000 amps available fault current (AFC) rating.

Self-healing technology: in case of an overload, the self-healing properties of the low loss metallized polypropylene will prevent permanent dielectric breakdown.

Reactive Power Compensation Capacitor Specifications

	AMP0 Low Voltage (Three-phase and single-phase) (up to 600 VAC)	MMP0 Low Voltage (Three-phase and single-phase) (up to 600 VAC)	MMP0 Low Voltage (Three-phase and single-phase) (750 to 900 VAC)	MMP0 Medium Voltage (Three-phase and single-phase) (1040 to 4800 VAC)	EPFC Low Voltage (Three-phase) (up to 600 VAC) (60 Hz)	EPFC Low Voltage (Three-phase) (up to 525 VAC) (50 Hz)
		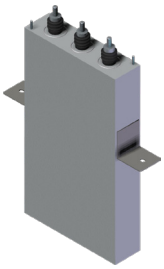	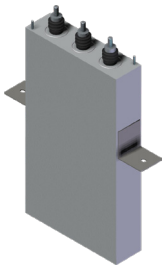			

Electrical Characteristics

Rated Voltages	240, 480 and 600 VAC	240, 480 and 600 VAC	750 and 900 VAC	1040 , 1200, 2400, 2770, 4160 and 4800 VAC	240, 480 and 600 VAC	400, 415, 440, 480 and 525 VAC
Rated Frequency	60 Hertz	60 Hertz	60 Hertz	60 Hertz	60 Hertz	50 Hertz
Capacitor Type	Fluid impregnated (Dry also available)	Fluid impregnated	Fluid impregnated	Fluid impregnated	Fluid impregnated	Fluid impregnated
Dielectric System	Self-healing metallized polypropylene film	Self-healing metallized polypropylene film	Self-healing metallized polypropylene film	Self-healing metallized polypropylene film	Self-healing metallized polypropylene film	Self-healing metallized polypropylene film
Impregnation Fluid	Non-PCB, non-toxic, biodegradable, Class III combustible fluid	Non-PCB, non-toxic, biodegradable, Class III combustible fluid	Non-PCB, non-toxic, biodegradable, Class III combustible fluid	Non-PCB, non-toxic, biodegradable, Class III combustible fluid	Non-PCB, non-toxic, biodegradable, Class III combustible fluid	Non-PCB, biodegradable, natural oil
Capacitor Connection, 3-phase	Internal delta connection	Internal delta connection	Internal wye connection	Internal delta or wye connection	Internal delta connection	Internal delta connection
Capacitance Tolerance	-0% to +15%	-0% to +15%	-0% to +15%	-0% to +15%	-0% to +15%	-5% to +10%
Discharge Device	External resistors reduce residual voltage to <50 V with in 1 minute	Internal resistors reduce residual voltage to <50 V within 1 minute	Internal resistors reduce residual voltage to <50 V within 5 minutes	Internal resistors reduce residual voltage to <50 V within 5 minutes	Internal resistors reduce residual voltage to <50 V within 1 minute	Internal resistors reduce residual voltage to <50 V within 1 minute
Total Losses	<0.5 Watts / KVAR at 60 Hertz, 25°C	<0.5 Watts / KVAR at 60 Hertz, 25°C	<0.5 Watts / KVAR at 60 Hertz, 25°C	<0.5 Watts / KVAR at 60 Hertz, 25°C	<0.5 Watts / KVAR at 60 Hertz, 25°C (without resistors)	<0.5 Watts / KVAR at 50 Hertz, 25°C (without resistors)
Design Service Life	200,000 hours continuous duty	200,000 hours continuous duty	200,000 hours continuous duty	200,000 hours continuous duty	200,000 hours continuous duty	100,000 hours (150,000 high harmonic)

CDÉ CORNELL DUBILIER

1605 E. Rodney French Blvd. Tel: 508-996-8561
New Bedford, MA 02745 Fax: 508-996-3830

sales1@cde.com
www.CDE.com

Reactive Power Compensation Capacitor Specifications (cont.)

	AMP0 Low Voltage (Three-phase and single-phase) (up to 600 VAC)	MMP0 Low Voltage (Three-phase and single-phase) (up to 600 VAC)	MMP0 Low Voltage (Three-phase and single-phase) (750 to 900 VAC)	MMP0 Medium Voltage (Three-phase and single-phase) (1040 to 4800 VAC)	EPFC Low Voltage (Three-phase) (up to 600 VAC) (60 Hz)	EPFC Low Voltage (Three-phase) (up to 525 VAC) (50 Hz)
		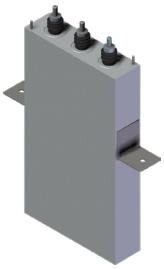	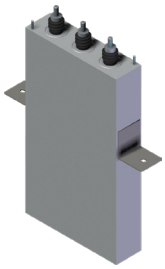			
Over Current						
Standard	135% * rated current continuous, includes harmonic currents	135% * rated current continuous, includes harmonic currents	135% * rated current continuous, includes harmonic currents	135% * rated current continuous, includes harmonic currents	135% * rated current continuous, includes harmonic currents	150% * rated current continuous, includes harmonic currents
High Harmonic	150% * rated current continuous, includes harmonic currents	150% * rated current continuous, includes harmonic currents	150% * rated current continuous, includes harmonic currents	150% * rated current continuous, includes harmonic currents	150% * rated current continuous, includes harmonic currents	200% * rated current continuous, includes harmonic currents
Over Voltage						
Standard	110% * rated voltage continuous	110% * rated voltage continuous	110% * rated voltage continuous	110% * rated voltage continuous	110% * rated voltage continuous	110% * rated (8 hrs. in every 24 hrs.)
High Harmonic	120% * rated voltage continuous	120% * rated voltage continuous	120% * rated voltage continuous	120% * rated voltage continuous	120% * rated voltage continuous	120% * rated (5 minutes in every 24 hours)

1605 E. Rodney French Blvd. Tel: 508-996-8561
New Bedford, MA 02745 Fax: 508-996-3830
sales1@cde.com
www.CDE.com

Reactive Power Compensation Capacitor Specifications (cont.)

	AMP0 Low Voltage (Three-phase and single-phase) (up to 600 VAC)	MMP0 Low Voltage (Three-phase and single-phase) (up to 600 VAC)	MMP0 Low Voltage (Three-phase and single-phase) (750 to 900 VAC)	MMP0 Medium Voltage (Three-phase and single-phase) (1040 to 4800 VAC)	EPFC Low Voltage (Three-phase) (up to 600 VAC) (60 Hz)	EPFC Low Voltage (Three-phase) (up to 525 VAC) (50 Hz)
		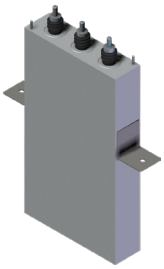	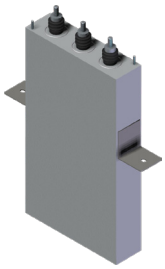			

Mechanical Characteristics

Enclosure Type	Drawn tin plated steel rectangular can	Heavy gauge welded steel construction	Heavy gauge welded steel construction	Heavy gauge welded steel construction	Extruded aluminum cylindrical can with M12 mounting stud	Extruded aluminum cylindrical can with M12 mounting stud
Finish	None (standard) Painted (optional)	Light gray paint, ANSI #61, UL approved for outdoor usage	Light gray paint, ANSI #61, UL approved for outdoor usage	Light gray paint, ANSI #61, UL approved for outdoor usage	None	None
Mounting	Optional bracketing is available	Heavy gauge brackets, mounting holes 2 x ½ x 5/8" slots	Heavy gauge brackets, mounting holes 2 x ½ x 5/8" slots	Heavy gauge brackets, mounting holes 2 x ½ x 5/8" slots	M12 mounting stud 10 NM max. torque	M12 mounting stud 10 NM max. torque
Terminals	3- and 2-terminal cover: ¼"-20 male threaded stud, 20 in-lbs fastening torque	½"-13 brass studs, 160 in-lbs fastening torque, 30 kV BIL bushing	½"-13 brass studs, 160 in-lbs fastening torque, 30 kV BIL bushing	½"-13 brass studs, 160 in-lbs fastening torque, 60 kV BIL ceramic bushings	M6 terminal 2-1/2 NM fastening torque, M8 terminal 4 NM fastening torque	3-phase terminal with electrical shock protection (finger proof)
Loss of KVAR feature	-	Optional	Optional	-	-	-

CDÉ ENERGIZING IDEAS
CORNELL DUBILIER

1605 E. Rodney French Blvd. Tel: 508-996-8561
New Bedford, MA 02745 Fax: 508-996-3830

sales1@cde.com
www.CDE.com

Reactive Power Compensation Capacitor Specifications (cont.)

	AMP0 Low Voltage (Three-phase and single-phase) (up to 600 VAC)	MMP0 Low Voltage (Three-phase and single-phase) (up to 600 VAC)	MMP0 Low Voltage (Three-phase and single-phase) (750 to 900 VAC)	MMP0 Medium Voltage (Three-phase and single-phase) (1040 to 4800 VAC)	EPFC Low Voltage (Three-phase) (up to 600 VAC) (60 Hz)	EPFC Low Voltage (Three-phase) (up to 525 VAC) (50 Hz)
		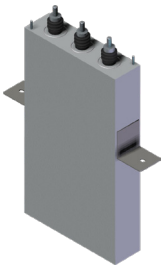	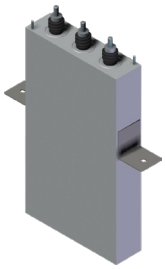			

Environmental Characteristics

Operating Temperature	-40°C to +46°C, -40°F to +115°F, with natural convection cooling	-40°C to +46°C, -40°F to +115°F, with natural convection cooling	-40°C to +46°C, -40°F to +115°F, with natural convection cooling	40°C to +46°C, -40°F to +115°F, with natural convection cooling	-40°C to +46°C, -40°F to +115°F, with natural convection cooling	-40°C to +55°C -40°F to +131°F, with natural convection cooling
Storage Temperature	-40°C to +85°C, -40°F to +185°F	-40°C to +85°C, -40°F to +185°F	-40°C to +85°C, -40°F to +185°F	-40°C to +85°C, -40°F to +185°F	-40°C to +85°C, -40°F to +185°F	-40°C to +85°C, -40°F to +185°F
Maximum Altitude	2000 meters above sea level	2000 meters above sea level	2000 meters above sea level	2000 meters above sea level	2000 meters above sea level	4000 meters above sea level
Humidity	0 to 95% non-condensing	0 to 95% non-condensing	0 to 95% non-condensing	0 to 95% non-condensing	0 to 95% non-condensing	0 to 95% non-condensing
Standards	UL 810 UL C22.2 No. 190 Canadian Standards IEC60831	UL 810 UL C22.2 No. 190 Canadian Standards ANSI/IEEE 18 NEMA CP-1 IEC60871	ANSI/IEEE 18 NEMA CP-1	ANSI/IEEE 18 NEMA IEC60871	UL 810 IEC 60831 IS13340	IS 5553 IEC 60289 IS13340
Certifications	UL Recognized CYTW2 cUL Recognized CYTW8 RoHS Compliant	UL Recognized CYTW2 cUL Recognized CYTW8	-	-	UL Recognized CYTW2 cUL Recognized CYTW8	CE
Safety Features	Pressure interrupter Self-healing technology External discharge resistors	Pressure interrupter Self-healing technology Internal discharge resistors	Pressure interrupter Self-healing technology Internal discharge resistors	Self-healing technology Internal discharge resistors	Pressure interrupter Self-healing technology Internal discharge resistors	Pressure interrupter Self-healing technology Internal discharge resistors

1605 E. Rodney French Blvd. Tel: 508-996-8561
New Bedford, MA 02745 Fax: 508-996-3830
sales1@cde.com
www.CDE.com

Mounting Orientation

All CDE power factor correction capacitors can be mounted in a vertical position with the terminals facing up or horizontally. The units should not be mounted upside down. For proper operation of the pressure interrupter, capacitors mounted in banks must have enough space between them for expansion. In cases where brackets or mounting straps are used, there should only be enough pressure on the unit to hold it in place.

Suggested Mounting Clearances

	Side to Side Clearance	Clearance above Terminals
AMP0/EPFC	0.5"	1.0"
MMP0-LV	1.5"	1.0"
MMP0-MV	1.5"	3.0"

Part Numbering System

CDE's part numbering system is a descriptive part number made up of several different components such as KVAR, voltage rating, etc. The descriptors are explained below using AMP00125F33S as a representative part number.

AMP0 012 5 F 3 3 S

TYPE
AMP0
MMP0
EPFC

WHOLE KVAR
As indicated

KVAR IN TENTHS
As indicated
(Omit if n/a)

VOLTAGE CODE 60 HZ
Standard Harmonics

D = 240 VAC	W = 1200 VAC
F = 480 VAC	J = 2400 VAC
H = 600 VAC	K = 2770 VAC
Z = 750 VAC	L = 4160 VAC
O = 900 VAC	M = 4800 VAC
B = 1040 VAC	

High Harmonics
C = 480 VAC
I = 600 VAC

VOLTAGE CODE 50 HZ
Standard Harmonics

E = 380 VAC	P = 440 VAC
G = 400 VAC	Q = 480 VAC
A = 415 VAC	R = 525 VAC

NUMBER OF PHASES
1 = single-phase
3 = three-phase

NUMBER OF TERMINALS
2 = 2 terminals
3 = 3 terminals

FACTORY CODES
N = China
S = USA
H = India

CDE ENERGIZING IDEAS
CORNELL DUBILIER
1605 E. Rodney French Blvd. Tel: 508-996-8561
New Bedford, MA 02745 Fax: 508-996-3830
sales1@cde.com
www.CDE.com

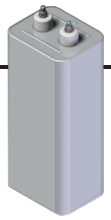

Type AMPO Capacitor Cells, 240 to 600 VAC, Three-Phase and Single-Phase

Reactive Power Compensation Rating (KVAR)

KVAR	CDE P/N	NOMINAL CURRENT (A_{RMS})	C_T NOMINAL CAPACITANCE (µF)	CAN SIZE W x L x H (in)	APPROX WEIGHT (lbs)
240 VAC, 60 Hz, 3-Phase, Delta Connection					
2.5	AMP00025D33S	6	115.1	3.75 x 4.56 x 5	3.7
5	AMP0005D33S	12	230.3	3.75 x 4.56 x 6	4.5
6	AMP0006D33S	14.4	276.3	3.75 x 4.56 x 6.38	4.7
7.5	AMP00075D33S	18	345.4	3.75 x 4.56 x 7	5.2
10	AMP0010D33S	24.1	460.4	3.75 x 4.56 x 7	5.2
12.5	AMP00125D33S	30.1	575.6	3.75 x 4.56 x 9	6.7
480 VAC, 60 Hz, 3-Phase, Delta Connection					
2.5	AMP00025F33S	3	28.8	3.75 x 4.56 x 5	3.7
5	AMP0005F33S	6	57.6	3.75 x 4.56 x 5	3.7
7.5	AMP00075F33S	9	86.3	3.75 x 4.56 x 6	4.5
10	AMP0010F33S	12	115.1	3.75 x 4.56 x 6.38	4.7
12.5	AMP00125F33S	15	143.9	3.75 x 4.56 x 6.38	4.7
15	AMP0015F33S	18	172.7	3.75 x 4.56 x 7	5.2
16.7	AMP00167F33S	20.1	191.9	3.75 x 4.56 x 7	5.2
17.5	AMP00175F33S	21	201.5	3.75 x 4.56 x 7	5.2
20	AMP0020F33S	24.1	230.3	3.75 x 4.56 x 7	5.2
22.5	AMP00225F33S	27.1	259	3.75 x 4.56 x 9	6.7
25	AMP0025F33S	30.1	287.8	3.75 x 4.56 x 9	6.7
480 VAC, High Harmonic Applications, 3-Phase, Delta Connection					
7.5	AMP00075C33S	9	86.3	3.75 x 4.56 x 6.38	4.7
10	AMP0010C33S	12	115.1	3.75 x 4.56 x 6	4.5
12.5	AMP00125C33S	15	143.9	3.75 x 4.56 x 7	5.2
15	AMP0015C33S	18	172.7	3.75 x 4.56 x 10.5	7.8
16.7	AMP00167C33S	20.1	191.9	3.75 x 4.56 x 10.5	7.8
17.5	AMP00175C33S	21.1	201.5	3.75 x 4.56 x 10.5	7.8
20	AMP0020C33S	24.1	230.3	3.75 x 4.56 x 10.5	7.8

Custom ratings and sizes available. Please contact CDE.

CDE ENERGIZING IDEAS
CORNELL DUBILIER

1605 E. Rodney French Blvd. Tel: 508-996-8561
New Bedford, MA 02745 Fax: 508-996-3830

sales1@cde.com
www.CDE.com

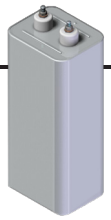

Type AMPO Capacitor Cells, 240 to 600 VAC, Three-Phase and Single-Phase (cont.)

Reactive Power Compensation Rating (KVAR)

KVAR	CDE P/N	NOMINAL CURRENT (A_{RMS})	C_T NOMINAL CAPACITANCE (µF)	CAN SIZE W x L x H (in)	APPROX WEIGHT (lbs)
600 VAC, 60 Hz, 3-Phase, Delta Connection					
2.5	AMP00025H33S	2.4	18.4	3.75 x 4.56 x 5	3.7
5	AMP0005H33S	4.8	36.8	3.75 x 4.56 x 5	3.7
7.5	AMP00075H33S	7.2	55.3	3.75 x 4.56 x 6	4.5
10	AMP0010H33S	9.6	73.7	3.75 x 4.56 x 6	4.5
12.5	AMP00125H33S	12	92.1	3.75 x 4.56 x 6	4.5
15	AMP0015H33S	14.4	110.5	3.75 x 4.56 x 6	4.5
16.7	AMP00167H33S	16.1	123.1	3.75 x 4.56 x 6	4.5
17.5	AMP00175H33S	16.8	128.9	3.75 x 4.56 x 6	4.5
20	AMP0020H33S	19.2	147.4	3.75 x 4.56 x 7	5.2
22.5	AMP00225H33S	21.7	165.8	3.75 x 4.56 x 8.63	6.4
25	AMP0025H33S	24.1	184.2	3.75 x 4.56 x 9	6.7
600 VAC, High Harmonic Applications, 3-Phase, Delta Connection					
10	AMP0010I33S	9.6	73.7	3.75 x 4.56 x 6	4.5
12.5	AMP00125I33S	12	92.1	3.75 x 4.56 x 8.25	6.2
15	AMP0015I33S	14.4	110.5	3.75 x 4.56 x 9	6.7
16.7	AMP00167I33S	16.1	123.1	3.75 x 4.56 x 9	6.7
17.5	AMP00175I33S	16.8	128.9	3.75 x 4.56 x 10.5	7.8
20	AMP0020I33S	19.2	147.4	3.75 x 4.56 x 10.5	7.8

Outline Drawings

AMPO: Suffix "33S"

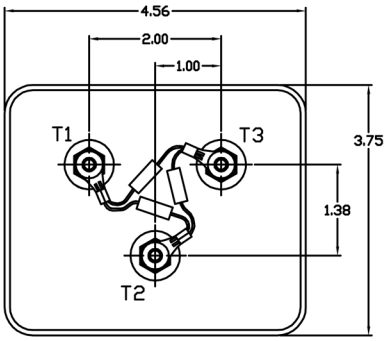

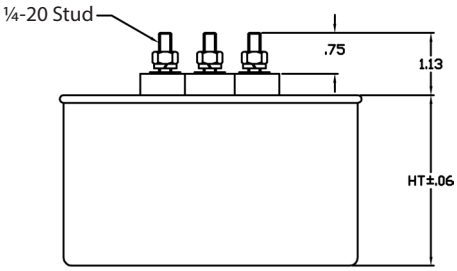

167 John Vertente Blvd.
New Bedford, MA 02745

Tel: +1-508-910-3500
Fax: +1-508-995-3000

sales1@cde.com
www.CDE.com

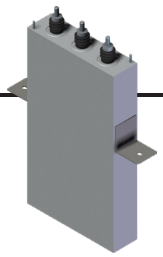

Type MMPO Capacitor Cells, 240 to 600 VAC, Three-Phase and Single-Phase

Reactive Power Compensation Rating (KVAR)

KVAR	CDE P/N	NOMINAL CURRENT (A_{RMS})	C_T NOMINAL CAPACITANCE (µF)	CAN SIZE W x L x H (in)	APPROX WEIGHT (lbs)
240 VAC, 60 Hz, 3-Phase, Delta Connection					
25	MMP0025D33	60.1	1151.3	3.75 x 13.5 x 13.5	31.3
30	MMP0030D33	72.2	1381.6	3.75 x 13.5 x 15.5	36.5
480 VAC, 60 Hz, 3-Phase, Delta Connection					
25	MMP0025F33	30.1	287.8	3.75 x 13.5 x 8.5	21.4
30	MMP0030F33	36.1	345.4	3.75 x 13.5 x 9.5	23.5
35	MMP0035F33	42.1	403	3.75 x 13.5 x 11.5	28.1
40	MMP0040F33	48.1	460.5	3.75 x 13.5 x 11.5	28.3
50	MMP0050F33	60.1	575.6	3.75 x 13.5 x 13.5	32.3
60	MMP0060F33	72.2	690.8	3.75 x 13.5 x 15.5	36.4
75	MMP0075F33	90.2	863.5	3.75 x 13.5 x 18.5	43.1
80	MMP0080F33	96.2	921	3.75 x 13.5 x 19.5	44.6
90	MMP0090F33	108.3	1036.2	3.75 x 13.5 x 20.5	45.9
100	MMP0100F33	120.3	1151.3	3.75 x 13.5 x 24	55.3
480 VAC, High Harmonic Applications, 3-Phase, Delta Connection					
25	MMP0025C33	30.1	287.8	3.75 x 13.5 x 8.5	21.4
50	MMP0050C33	60.1	575.6	3.75 x 13.5 x 13.5	32.3
75	MMP0075C33	90.2	863.5	3.75 x 13.5 x 18.5	43.1
100	MMP0100C33	120.3	1151.3	3.75 x 13.5 x 24	55.3
600 VAC, High Harmonic Applications, 3-Phase, Delta Connection					
25	MMP0025I33	24.1	184.2	3.75 x 13.5 x 8.5	21.4
30	MMP0030I33	28.9	221	3.75 x 13.5 x 9.5	23.5
35	MMP0035I33	33.7	275.9	3.75 x 13.5 x 11.5	28.1
40	MMP0040I33	38.5	294.7	3.75 x 13.5 x 11.5	28.3
45	MMP0045I33	43.3	331.6	3.75 x 13.5 x 13.5	32.2
50	MMP0050I33	48.1	368.4	3.75 x 13.5 x 13.5	32.3
60	MMP0060I33	57.7	442.1	3.75 x 13.5 x 15.5	36.4
75	MMP0075I33	72.2	552.6	3.75 x 13.5 x 18.5	43.1
80	MMP0080I33	77	589.5	3.75 x 13.5 x 19.5	44.6
90	MMP0090I33	86.6	663.1	3.75 x 13.5 x 20.5	45.9
100	MMP0100I33	96.2	736.8	3.75 x 13.5 x 24	55.3

Custom ratings and sizes available. Please contact CDE.

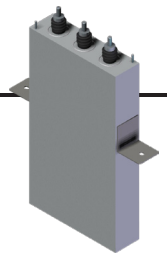

Type MMPO Capacitor Cells, 750 VAC and 900 VAC, Three-Phase and Single-Phase

Reactive Power Compensation Rating (KVAR)

KVAR	CDE P/N	NOMINAL CURRENT (A_{RMS})	C_T NOMINAL CAPACITANCE (µF)	CAN SIZE W x L x H (in)	APPROX WEIGHT (lbs)
750 VAC, 60 Hz, 3-Phase, "WYE" Connection					
100	MMP0100Z33	77	1414.7	3.75 x 13.5 x 24	55.3
900 VAC, 60 Hz, 3-Phase, "WYE" Connection					
100	MMP0100O33	64.2	982.4	3.75 x 13.5 x 20.5	49.6

Type MMPO Capacitor Cells, 1040 VAC to 4800 VAC, Three-Phase and Single-Phase

Reactive Power Compensation Rating (KVAR)

KVAR	CDE P/N	NOMINAL CURRENT (A_{RMS})	C_T NOMINAL CAPACITANCE (µF)	CAN SIZE W x L x H (in)	APPROX WEIGHT (lbs)
1040 VAC, 60 Hz, 3-Phase, Delta Connection					
25	MMP0025B33	13.9	61.3	5.63 x 13.5 x 6	20.5
75	MMP0075B33	41.6	183.9	5.63 x 13.5 x 10	34.2
100	MMP0100B33	55.6	245.2	5.63 x 13.5 x 11.5	39.3
125	MMP0125B33	69.4	306.6	5.63 x 13.5 x 13	44.5
150	MMP0150B33	83.3	367.9	5.63 x 13.5 x 15	51.3
175	MMP0175B33	97.2	429.2	5.63 x 13.5 x 17.5	59.9
200	MMP0200B33	111	490.5	5.63 x 13.5 x 20	68.4
1200 VAC, 60 Hz, 3-Phase, Delta Connection					
25	MMP0025W33	12	46.1	5.63 x 13.5 x 6	20.5
50	MMP0050W33	24.1	92.1	5.63 x 13.5 x 9	30.8
100	MMP0100W33	48.1	184.2	5.63 x 13.5 x 11.5	39.3
125	MMP0125W33	60.1	230.3	5.63 x 13.5 x 14	47.9
150	MMP0150W33	72.2	276.3	5.63 x 13.5 x 15	51.3
175	MMP0175W33	84.2	322.4	5.63 x 13.5 x 17.5	59.9
200	MMP0200W33	96.2	368.4	5.63 x 13.5 x 19	65
2400 VAC, 60 Hz, 3-Phase, Delta Connection					
25	MMP0025J33	6	11.5	5.63 x 13.5 x 6	20.5
50	MMP0050J33	12	23	5.63 x 13.5 x 7.5	25.7
75	MMP0075J33	18	34.5	5.63 x 13.5 x 10	34.2
100	MMP0100J33	24.1	46.1	5.63 x 13.5 x 11.5	39.3
125	MMP0125J33	30.1	57.6	5.63 x 13.5 x 14	47.9
150	MMP0150J33	36.1	69.1	5.63 x 13.5 x 16	54.7
175	MMP0175J33	42.1	80.6	5.63 x 13.5 x 17.5	59.9
200	MMP0200J33	48.1	92.1	5.63 x 13.5 x 19	65

Custom ratings and sizes available. Please contact CDE.

167 John Vertente Blvd.
New Bedford, MA 02745

Tel: +1-508-910-3500
Fax: +1-508-995-3000

sales1@cde.com
www.CDE.com

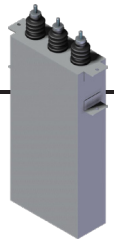

Type MMPO Capacitor Cells, 1040 VAC to 4800 VAC, Three-Phase and Single-Phase (cont.)

Reactive Power Compensation Rating (KVAR)

KVAR	CDE P/N	NOMINAL CURRENT (A_{RMS})	C_T NOMINAL CAPACITANCE (µF)	CAN SIZE W x L x H (in)	APPROX WEIGHT (lbs)
2770 VAC, 60 Hz, 3-Phase, Delta Connection					
25	MMP0025K33	5.2	8.6	5.63 x 13.5 x 7.5	25.7
50	MMP0050K33	10.4	17.3	5.63 x 13.5 x 9	30.8
75	MMP0075K33	15.6	25.9	5.63 x 13.5 x 11.5	39.3
100	MMP0100K33	20.8	34.6	5.63 x 13.5 x 15	47
125	MMP0125K33	26.1	73.2	5.63 x 13.5 x 16	54.7
150	MMP0150K33	31.3	51.9	5.63 x 13.5 x 17.5	59.9
175	MMP0175K33	36.5	60.5	5.63 x 13.5 x 19	65
200	MMP0200K33	41.7	69.1	5.63 x 13.5 x 20	68.4
4160 VAC, 60 Hz, 3-Phase, Delta Connection					
25	MMP0025L33	3.5	3.8	5.63 x 13.5 x 7.5	25.7
50	MMP0050L33	7	7.7	5.63 x 13.5 x 9	30.8
75	MMP0075L33	10.4	11.5	5.63 x 13.5 x 11.5	39.3
100	MMP0100L33	13.9	15.3	5.63 x 13.5 x 11.5	39.3
125	MMP0125L33	17.4	19.2	5.63 x 13.5 x 16	54.7
150	MMP0150L33	20.8	23	5.63 x 13.5 x 17.5	59.9
175	MMP0175L33	24.3	26.8	5.63 x 13.5 x 19	65
200	MMP0200L33	27.8	30.7	5.63 x 13.5 x 20	68.4
4800 VAC, 60 Hz, 3-Phase, Delta Connection					
25	MMP0025M33	3	2.9	5.63 x 13.5 x 7.5	25.7
50	MMP0050M33	6	4.8	5.63 x 13.5 x 9	30.8
75	MMP0075M33	9	8.6	5.63 x 13.5 x 10	34.2
100	MMP0100M33	12	11.5	5.63 x 13.5 x 11.5	39.3
125	MMP0125M33	15	14.4	5.63 x 13.5 x 16	54.7
150	MMP0150M33	18	17.3	5.63 x 13.5 x 17.5	59.9
175	MMP0175M33	21.1	20.1	5.63 x 13.5 x 17.5	59.9
200	MMP0200M33	24.1	23	5.63 x 13.5 x 20	68.4

167 John Vertente Blvd.
New Bedford, MA 02745
Tel: +1-508-910-3500
Fax: +1-508-995-3000
sales1@cde.com
www.CDE.com

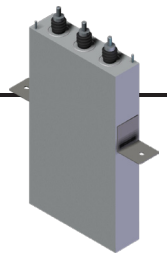

Outline Drawings

MMPO: 240, 480, 600, 750 & 900 VAC

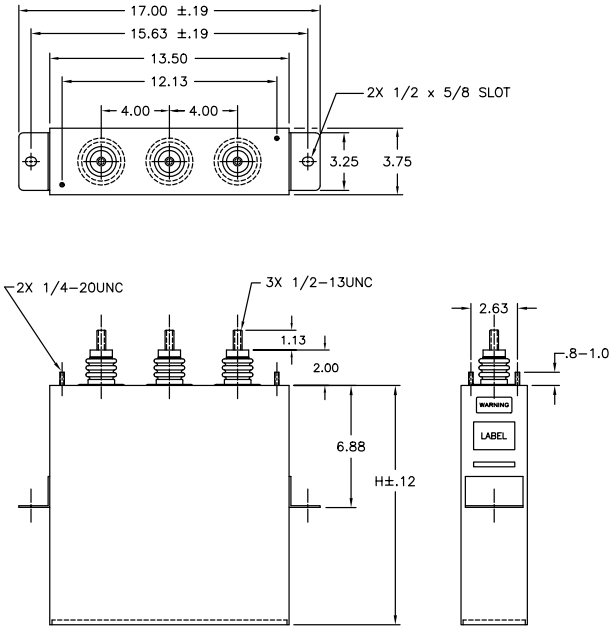

MMPO: 1040 to 4800 VAC

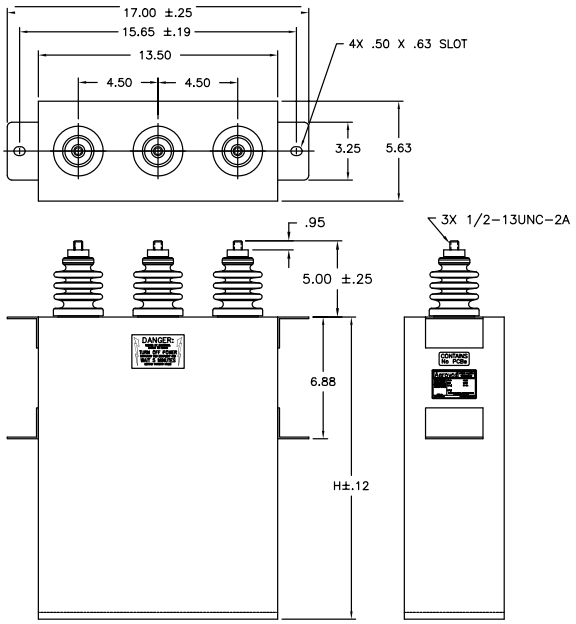

Reactive Power Compensation Rating (KVAR)

Type EPFC Capacitor Cells*

KVAR	CDE P/N	NOMINAL CURRENT (A_{RMS})	C_T NOMINAL CAPACITANCE (µF)	DIMENSIONS D x H (mm)	APPROX WEIGHT (kg)
240 VAC, 60 Hz, 3-Phase, Delta Connection					
0.5	EPFC0005D33N	1.2	23	76 x 70	0.48
1	EPFC001D33N	2.4	46.1	76 x 76	0.5
2	EPFC002D33N	4.8	92.1	76 x 140	0.78
2.5	EPFC0025D33N	6	115.1	76 x 140	0.78
3	EPFC003D33N	7.2	138.2	76 x 140	0.78
4	EPFC004D33N	9.6	184.2	86 x 115	0.9
5	EPFC005D33N	12	230.3	86 x 170	1.2
6	EPFC006D33N	14.4	276.3	86 x 170	1.2
7.5	EPFC0075D33N	18	345.4	86 x 170	1.2
10	EPFC010D33N	24.1	460.4	86 x 200	1.35
480 VAC, 60 Hz, 3-Phase, Delta Connection					
2	EPFC002F33N	2.4	23	86 x 70	0.6
7.5	EPFC0075F33N	9	86.3	86 x 170	1.15
10	EPFC010F33N	12	115.1	86 x 170	1.15
12.5	EPFC0125F33N	15	143.9	86 x 170	1.15
15	EPFC015F33N	18	172.7	86 x 200	1.35
16.7	EPFC0167F33N	20	191.9	86 x 215	1.45
17.5	EPFC0175F33N	21	201.8	86 x 245	1.6
20	EPFC020F33N	24	230.3	86 x 245	1.6
22.5	EPFC0225F33N	27	259	86 x 275	1.75
25	EPFC025F33N	30	287.8	86 x 275	1.75
30	EPFC030F33N	36	345.6	116 x 285	3.15
35	EPFC035F33N	42.1	403.2	116 x 315	3.45
40	EPFC040F33N	48.1	460.8	116 x 342	3.7
480 VAC, 60 Hz, High Harmonic Applications, 3-Phase, Delta Connection					
12.5	EPFC0125C33N	15	143.9	86 x 245	1.6
15	EPFC015C33N	18	172.7	86 x 275	1.75
16.7	EPFC0167C33N	20	191.9	86 x 305	1.9
17.5	EPFC0175C33N	21	201.5	86 x 305	1.9
20	EPFC020C33N	24	230.3	86 x 335	2.05

Custom ratings and sizes available. Please contact CDE.

167 John Vertente Blvd.
New Bedford, MA 02745

Tel: +1-508-910-3500
Fax: +1-508-995-3000

sales1@cde.com
www.CDE.com

Reactive Power Compensation Rating (KVAR)

Type EPFC Capacitor Cells

KVAR	CDE P/N	NOMINAL CURRENT (A_{RMS})	C_T NOMINAL CAPACITANCE (µF)	DIMENSIONS D x H (mm)	APPROX WEIGHT (kg)
600 VAC, 60 Hz, 3-Phase, Delta Connection					
10	EPFC010H33N	9.6	73.7	86 x 170	1.15
12.5	EPFC0125H33N	12	92.1	86 x 170	1.15
15	EPFC015H33N	14.4	110.5	86 x 200	1.35
16.7	EPFC0167H33N	16	122.8	86 x 215	1.45
17.5	EPFC0175H33N	16.8	128.9	86 x 215	1.45
20	EPFC020H33N	19.2	147.4	86 x 245	1.6
22.5	EPFC0225H33N	21.6	165.8	86 x 275	1.75
25	EPFC025H33N	24	184.2	86 x 275	1.75
30	EPFC030H33N	28.8	219.9	116 x 285	2.95
35	EPFC035H33N	33.6	258	116 x 315	3.25
40	EPFC040H33N	38.4	294.9	116 x 342	3.7
600 VAC, 60 Hz, 3-Phase, Delta Connection					
10	EPFC010I33N	9.6	73.7	86 x 200	1.35
12.5	EPFC0125I33N	12	92.1	86 x 245	1.6
15	EPFC015I33N	14.4	110.5	86 x 245	1.6
16.7	EPFC0167I33N	16	122.8	86 x 275	1.75
17.5	EPFC0175I33N	16.8	128.9	86 x 275	1.75
20	EPFC020I33N	19.2	147.4	86 x 305	1.9
25	EPFC025I33N	24.1	184.4	116 x 315	3.5

*Made in China

Outline Drawings

EPFC: 240 to 600 VAC

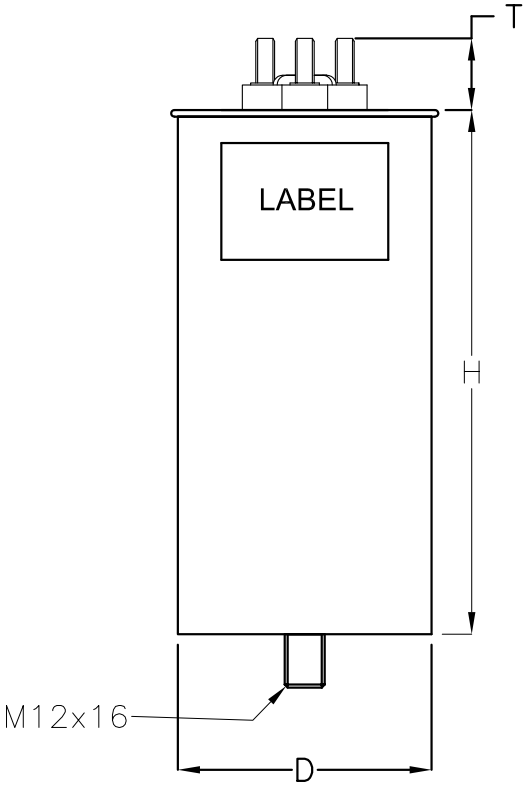

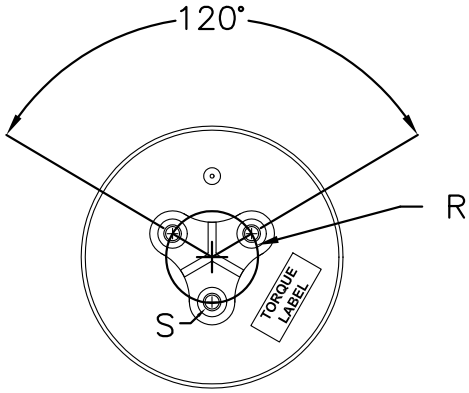

ALL DIMENSIONS IN MILLIMETERS

	D	
	76 or 86	116
S	M6 STUD	M8 STUD
R	14	20
T	24	27.5

Reactive Power Compensation Rating (KVAR)
CDE 50 Hz EPFC*

KVAR	CDE P/N	NOMINAL CURRENT (A_{RMS})	C_T NOMINAL CAPACITANCE (µF)	CAN SIZE D x H (mm)	APPROX WEIGHT (kg)
400 VAC, 50 Hz, 3-Phase Delta Connection					
2	EPFC002G33H	2.88	39.8	75 x 175	0.91
2.5	EPFC0025G33H	3.6	49.7	75 x 175	0.91
5	EPFC005G33H	7.2	99.5	75 x 175	0.91
7.5	EPFC0075G33H	10.8	149.2	75 x 210	1.08
10	EPFC010G33H	14.4	198.9	85 x 210	1.45
12.5	EPFC0125G33H	18	248.7	95 x 210	1.36
15	EPFC015G33H	21.6	298.4	95 x 210	1.36
20	EPFC020G33H	28.9	397.9	95 x 247	1.93
25	EPFC025G33H	36.1	497.4	116 x 247	2.81
30	EPFC030G33H	43.3	596.8	116 x 247	2.81
50	EPFC050G33H	72.2	994.7	116 x 353	3
415 VAC, 50 Hz, 3-Phase Delta Connection					
2	EPFC002A33H	2.8	37	75 x 175	0.91
5	EPFC005A33H	7	92.4	75 x 175	0.91
7.5	EPFC0075A33H	10.4	138.6	75 x 210	1.08
10	EPFC010A33H	13.9	184.8	75 x 210	1.08
12.5	EPFC0125A33H	17.4	231	85 x 210	1.45
15	EPFC015A33H	20.9	277.2	95 x 210	1.36
20	EPFC020A33H	27.8	369.6	95 x 247	1.93
25	EPFC025A33H	34.8	462.1	116 x 247	2.81
30	EPFC030A33H	41.7	554.5	116 x 247	2.81
50	EPFC050A33H	69.6	924.1	116 x 353	3
440 VAC, 50 Hz, 3-Phase Delta Connection					
2	EPFC002P33H	2.6	32.9	75 x 175	0.91
2.5	EPFC0025P33H	3.3	41.1	75 x 175	0.91
5	EPFC005P33H	6.6	82.2	75 x 175	0.91
7.5	EPFC0075P33H	9.8	123.3	75 x 175	0.91
10	EPFC010P33H	13.1	164.4	75 x 210	1.1
12.5	EPFC0125P33H	16.4	205.5	85 x 210	1.16
15	EPFC015P33H	19.7	246.6	95 x 210	1.36
20	EPFC020P33H	26.2	328.8	95 x 247	1.93
25	EPFC030P33H	32.8	411	116 x 210	2.4
30	EPFC030P33H	39.4	493.2	116 x 247	2.81
50	EPFC050P33H	65.6	822.1	116 x 353	3

Custom ratings and sizes available. Please contact CDE.

167 John Vertente Blvd.
New Bedford, MA 02745

Tel: +1-508-910-3500
Fax: +1-508-995-3000

sales1@cde.com
www.CDE.com

Reactive Power Compensation Rating (KVAR)

KVAR	CDE P/N	NOMINAL CURRENT (A_{RMS})	C_T NOMINAL CAPACITANCE (µF)	CAN SIZE D x H (mm)	APPROX WEIGHT (kg)
480 VAC, 50 Hz, 3-Phase Delta Connection					
5	EPFC005Q33H	6	69.1	75 x 175	0.94
7.5	EPFC0075Q33H	9	103.6	75 x 210	1.08
10	EPFC010Q33H	12	138.2	85 x 210	1.41
12.5	EPFC0125Q33H	15	172.7	95 x 210	1.36
15	EPFC015Q33H	18	207.2	95 x 247	1.93
20	EPFC020Q33H	24.1	276.3	95 x 247	1.93
25	EPFC025Q33H	30.1	345.4	116 x 247	2.81
525 VAC, 50 Hz, 3-Phase Delta Connection					
5	EPFC005R33H	5.5	57.7	75 x 175	0.96
7.5	EPFC0075R33H	8.2	86.6	75 x 210	1.11
10	EPFC010R33H	11	115.5	95 x 210	1.36
12.5	EPFC0125R33H	13.8	144.4	95 x 247	1.93
15	EPFC015R33H	16.5	173.2	95 x 247	1.93
20	EPFC020R33H	22	231	116 x 247	2.81
25	EPFC025R33H	27.5	288.7	136 x 247	2.99

*Made in India

Outline Drawings

EPFC: 400 to 525 VAC

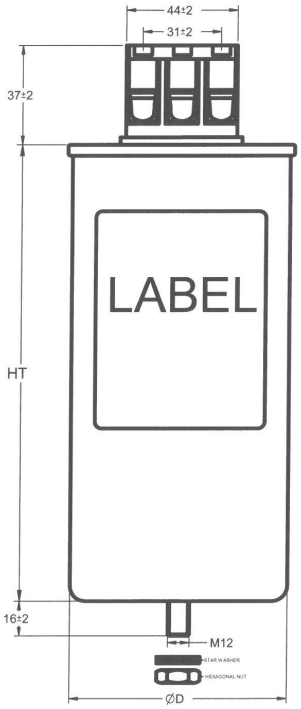

Different terminal options available upon request.

CD Aero
A Division of Cornell Dubilier Electronics, Inc.
167 John Vertente Blvd.
New Bedford, MA 02745
Tel: +1-508-910-3500
Fax: +1-508-995-3000
sales1@cde.com
www.CDE.com

Capacitor Fundamentals

A capacitor is two conducting surfaces isolated from each other by insulating material called dielectric material. The capacitor is designed to be an electrical device characterized by its capacity to store an electrical charge and to be a passive electrical component that has two terminals. These terminals have a potential difference because of the stored charges in the capacitor. The effect of the capacitor in the electrical field is known as capacitance.

The Capacitance: a capacitance is the ratio of the electrical stored charge in the capacitor to the electrical potential on the terminals of the capacitor.

$$Q = CV$$

$$E = \frac{1}{2}CV^2$$

$$E = \frac{1}{2}QV$$

Capacitance Unit

The unit of capacitance is the Farad which refers to the English scientist Michael Faraday who studied the electromagnetic field and static electricity. This research helped him to discover the effect of capacitors in an electrical circuit.

1 Farad = 1 coulomb/volt

Farad means: The effect of the capacitor (capacitance) in the electrical circuit which requires a charge of 1 coulomb to create a potential difference of 1 volt between the plates of the capacitor.

Capacitors are reactive devices, so they give different impedances in the electrical circuits depending on the frequency and voltage applied to them. For practical applications, capacitance is much less than a farad. More typically, one will see values of:

1 Pico farad (1pF) = 10^{-12} farad
1 Nano farad (1nF) = 10^{-9} farad
1 Micro farad (1µF) = 10^{-6} farad

Capacitance Calculations

fluxdensity $B = \frac{Q}{A}$

electrical field intensity $E = \frac{V}{d}$

$$B = \varepsilon E$$

$$\frac{Q}{A} = \frac{\varepsilon V}{d} \rightarrow C = \frac{Q}{V} = \frac{\varepsilon A}{d}$$

$$C = \varepsilon_0 \varepsilon_r \cdot \frac{A}{d} \rightarrow \varepsilon = \varepsilon_0 \varepsilon_r$$

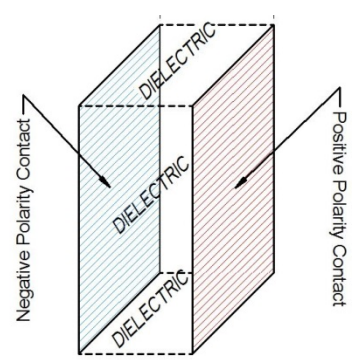

Fig. 3

ε_0: Permittivity of free space (8.854 pF/meter)

ε_r: Relative dielectric constant (unit-less)

A: Area of the plates (m^2)

d: dielectric thickness (mm)

The Equivalent Capacitors

In Series:

$$I_T = I_1 + I_2 + I_3 + \ ...$$

$$Q_T = Q_1 + Q_2 + Q_3 + \ ...$$

$$VT = \frac{Q_T}{C_T}$$

$$VT = V_1 + V_2 + V_3 + \ ...$$

$$VT = \frac{Q}{C_1} + \frac{Q}{C_2} + \frac{Q}{C_3} + \ ...$$

$$VT = \left(\frac{I}{C_1} + \frac{I}{C_2} + \frac{I}{C_3} + \ ...\right)$$

$$C_T = \sum_{i=1}^{n} \frac{I}{C_i}$$

if two caps. connected in series

$$C_T = \frac{C}{2}$$

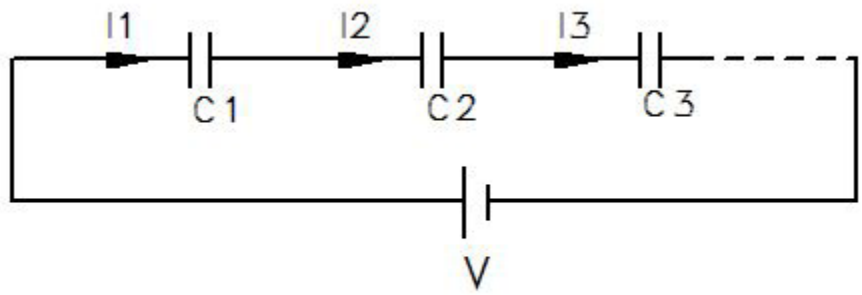

Fig 4

I_T: total current
I_1: current for capacitor (1)
I_2: current for capacitor (2)
Q_T: total charge
Q_1, Q_2, Q_3 : the charge for each cap.
V_T: total voltage

In Parallel:

$$V_1 = V_2 = V_3 = \ ... V_n = V_T$$

$$I_T = I_1 + I_2 + I_3 + \ ... + I_n$$

$$Q_T = Q_1 + Q_2 + Q_3 + \ ... + Q_n$$

$$Q_T = C_T V_T$$

$$Q_T = C_1 V_1 + C_2 V_2 + C_3 V_3 + \ ... + C_n V_n$$

$$Q_T = (C_1 + C_2 + C_3 + \ ... + C_n)V$$

$$C_T = C_1 + C_2 + C_3 + \ ... + C_n$$

$$C_T = \sum_{i=1}^{n} C_i$$

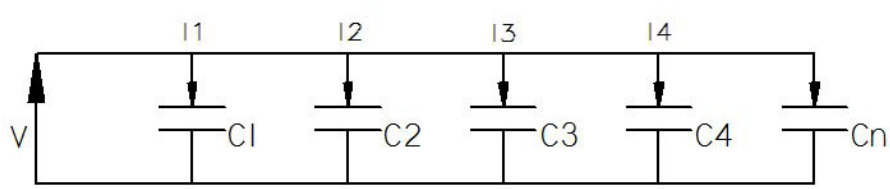

Fig 5

Schematic Circuit for the Capacitor

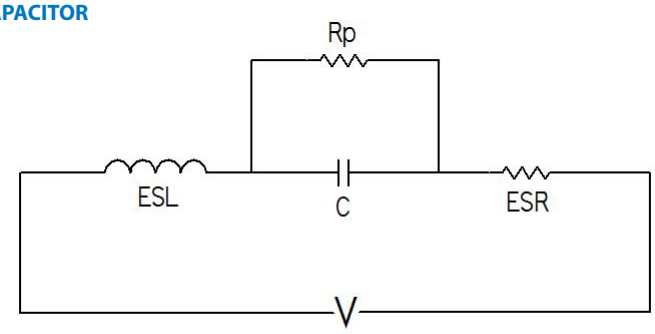

Fig 6

R_p: capacitor leakage resistance
ESR: Equivalent series resistance
ESL: Equivalent series inductance
C: Equivalent series capacitance

Capacitive Reactance (Xc)

The capacitive reactance is the effect of the capacitor in the electrical circuit.

$$X_c = \frac{1}{\omega C} = \frac{1}{2\pi f C}$$

$\omega = 2\pi f$

AC Capacitor

An AC capacitor must care about the:

1. Phase shift between the voltage and the current of the capacitor. For the ideal capacitor the phase shift will be 90 °, but because of the effects of ESR and ESL, the phase shift will be less than 90 °. The difference between the phase angle 0 and 90 ° is δ (loss angle), and can be measured through the dissipation power factor.

2. Resonance frequency

Dissipation Factor (DF)

Is the ratio of the ESR and (Xc) it is also known as a tangent of the loss angle (δ). This factor is:

$$DF = \frac{I^2 \cdot ESR}{I^2 \cdot |X_c|} = \omega_c \cdot ESR$$

$$tan\delta = \frac{ESR}{|X_c|} = DF$$

$$ESR = tan\delta - \frac{1}{2\pi f C}$$

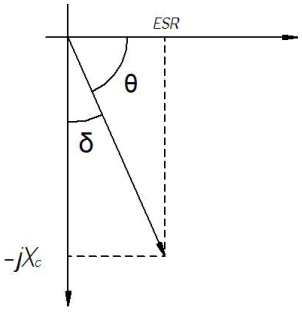

Fig 7

I : root mean square value for the rated capacitor current
ESR: Equivalent series resistance
δ: losses angle between ESR & Xc

At the same time:
The dissipation factor is the ratio of losses power to the reactive power of the capacitor.

$$tan\delta = \frac{P_{lossed}}{2\pi \cdot f \cdot C \cdot V^2}$$

P_{lossed} : real power lossed in ESR
tanδ: tangent for the losses angle between the ESR and Xc
f : frequency of the power supply
V: rated voltage on the capacitor
C: capacitance of the capacitor

2. Resonance frequency:
From the schematic circuit for the capacitor the impedance of the capacitor (Z)

$$\boxed{Z = \sqrt{(ESR)^2 + \left(2\pi \cdot f \cdot ESL - \frac{1}{2\pi \cdot f \cdot C}\right)^2}}$$

When the capacitive reactance equal to inductive reactance the impedance (Z) will equal ESR then the resonance frequency occurs

$XL_c = XC_c$

$$2\pi \cdot f_{res} \cdot ESL = \frac{1}{2\pi \cdot f_{res} \cdot C}$$

$$1 = (2\pi)^2 \cdot ESL \cdot C \cdot (f_{res})^2$$

$$f_{res} = \frac{1}{2\pi\sqrt{ESL \cdot C}}$$

Z: capacitor impedance
ESR: equivalent series resistance
f: frequency of the applied voltage on the capacitor terminals
ESL: equivalent series inductance
C: the capacitance
XL_c: equivalent inductance reactor of the capacitor
Xc: equivalent capacitive reactor of the capacitor

-

Equations for Power Factor Correction and Harmonic Distortion (Balanced Phase Loads)

Capacitors in Parallel

$$C_T = C_1 + C_2 + C_3 + \cdots C_n = \sum_{i=1}^{n} C_i$$

Capacitors in Series

$$\frac{1}{C_T} = \frac{1}{C_1} + \frac{1}{C_2} + \frac{1}{C_3} + \cdots \frac{1}{C_n} = \sum_{i=1}^{n} \frac{1}{C_i}$$

$$DF = Tan(\delta) = \frac{ESR}{X_C} = (2\pi f)(C)(ESR)$$

$$\text{Power Loss} = (2\pi f)(C \times V^2)(DF)$$

$$X_C = \frac{1}{(2\pi f)C}$$

$$C_T = \frac{KVAR \times 10^{-3}}{(2\pi f)(KV)^2}$$

$$KW \text{ (Motor Input)} = \frac{hp \times 0.746}{\%\text{Eff}}$$

$$KVA = \frac{KW}{PF} = \sqrt{(KW)^2 + (KVAR)^2}$$

$$KVAR = \frac{2\pi \times f \times C \times (KV)^2}{10^{-3}}$$

$$KVAR_E = KVAR_R \times \left[\frac{V_A}{V_R}\right]^2 \times \left[\frac{f_A}{f_R}\right]$$

$$KVAR = \frac{hp \times 0.746}{\eta}\left[\sqrt{\frac{1 - PF_0^2}{PF_0^2}} - \sqrt{\frac{1 - PF_0^2}{PF_T^2}}\right]$$

$$KVA = \frac{V_L \times I_L}{1000} \quad \text{Single-Phase}$$

$$KVA = \frac{\sqrt{3} \times V_L \times I_L}{1000} \quad \text{Three-Phase}$$

$$I_{RMS} = \sqrt{I_1^2 + \sum_{h=2}^{\infty} I_h^2}$$

Legend

K	1000
W	Watts
V	Volts
A	Amperes
hp	Horsepower
C	Capacitance (Farads)
PF	Power Factor
KW	Working Power (1000 Watts)
KVA	Total Power (1000 Volt-Amperes)
KVAR	Reactive Power (1000 Volt-Amperes Reactive)
δ	Loss Angle
V_L	Line Voltage
I_L	Line current
f	Frequency
$KVAR_E$	Effective KVAR
$KVAR_R$	Rated KVAR

KVAR De-rating for Voltage & Frequency

V_A	Applied line Voltage
V_R	Rated line voltage
f_A	Applied frequency
f_R	Rated frequency
η	Motor efficiency
PF_0	Initial Power Factor
PF_T	Target Power Factor
I_{RMS}	Root-mean-square value of current
I_1	Current at fundamental frequency
I_h	Harmonic current of order h
C_T	Total capacitance (Farads)
X_c	Capacitor reactance
I_{ph}	Phase current
DF	Dissipation Factor
ESR	Equivalent Series Resistances (Ohms)

Connection Types

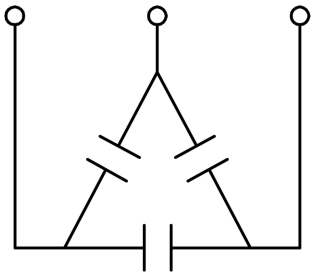

Delta Connection

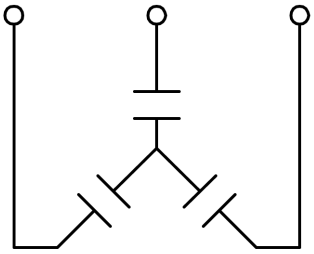

Wye Connection

Why Do You Need Power Factor Correction?

Power Factor Correction capacitors (PFCs) save power in an electric power system, and the savings can be substantial. PFCs do this by helping filter the harmonics load in the power system, which allows more efficient usage of utility power and reduces the amount of current lost. More useful power is transferred to the power system without requiring larger wiring or more robust equipment.

If a power system is receiving "dirty" power (fluctuations, harmonic dissonance, etc.) the PFC capacitor can filter these out and the capacitor will not fail. Use of PFC capacitors in industrial or manufacturing settings results in significant cost savings and longer equipment life. The efficient use of power also means the utility grid can avoid building additional power generators, saving capital cost, specifically in emerging markets.

How Does Power Factor Correction Work?

Electric power has two components:

1) Active power which produces work.

2) Reactive power, which is needed to generate the magnetic fields required for the operation of inductive electrical equipment, but performs no useful work.

Active (or "real") power is measured in KW (1000 Watts)

Reactive power is measured in KVAR (1000 Volt-Amperes Reactive)

Total (or "apparent") power is measured in KVA (1000 Volt-Amperes)

The ratio of working power to total power is called power factor.

$$PF = \frac{\text{Real Power}}{\text{Apparent Power}} \quad \begin{matrix}\text{(expressed in Watts)} \\ \text{(expressed in VA)}\end{matrix}$$

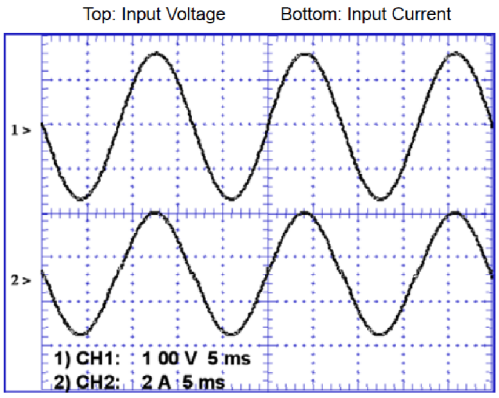

Power factor correction capacitors increase the power factor by supplying reactive power when installed at or near inductive electrical equipment. Ideally, the electrical load (motor, lights, etc.) should emulate a resistor, in which case, the reactive power is zero. The goal is to have a perfect sinewave of the current match the voltage.

Power Factor Correction Capacitors Save Money — So Keep Them Serviced!

Power factor correction capacitors lower electrical costs in two ways:

1) In many areas, the electrical rate includes a penalty charge when you have low power factor. Installing power factor capacitors on a facility's electrical distribution system makes it unnecessary for the utility to supply the reactive power which would otherwise be required by inductive electrical equipment. The savings the utility realizes in reduced generation, transmission, and distribution costs are passed onto the customer in the form of lower electrical bills.

2) The second source of savings realized by using power factor correction capacitors is in the form of increased KVA capacity in your electrical distribution system. Installing capacitors to furnish the non-productive current requirements of the facility makes it possible to increase the connected load as much as 20% without a corresponding increase in the size of the transformers, conductors, and protective devices in the distribution system which services the load.

What Can Go Wrong?

Without regular monitoring and maintenance of your PFC system, the system may not perform optimally, or worse, it may be headed for a breakdown. Issues can range from a non-ideal power factor to catastrophic failure of the entire PFC system. The capacitors and reactors could be severely damaged or destroyed. This could result in a full power down of the facility which will put your business lines down ($$$$). By maintaining the PFC system this can be avoided, and keep expensive replacement costs in check.

Safety Is Always First

Before working on any power factor system, make certain it is disconnected from the main power source, and that the output of the system is also disconnected. This ensures nothing is being fed backward through the system.

Also confirm the capacitors are discharged before disconnecting or adjusting any cabling or equipment. (PFC capacitors have discharge resistors to prevent shock, but manually checking that the capacitors did indeed discharge is always good practice.)

In the event testing needs to be completed while the PFC system is active, use extreme caution. Check that current transformers (CTs) are connected, as an open CT will create high voltage and could damage equipment as well as cause serious injury.

Where Should We Start?

Begin by performing a complete visual inspection of the system. This is a quick check to ensure the switches are working and the

capacitor banks are also working properly.

- Look for discolored components, bulging and/or leaking capacitors and signs of heating and/or moisture. Bulging in a capacitor is a telltale sign that it is at the end of its life.
- Check reactors for discolored cabling or cases.
- Check that fans are free of debris and in proper working order.
- Check the PFC controller and manually step through connecting each capacitor bank.
- Check the PFC % and ensure the phases are balanced.

Checking for Hot Spots

Thermal imaging is a great tool to evaluate an electrical system's performance. Imaging will need to be completed with the system running, so ensure you are following proper safety procedures first. Get your thermal imaging information where the wiring connections are to the capacitors and reactors - this includes the terminals of the capacitors.

- Check the capacitors for hot spots as well as the reactors. To do this, you will need to confirm the capacitors and reactors you are monitoring are live. There are usually manual settings from the PFC control to connect the components.
- Check specifically for temperature differences between phases of more than 7° C.
- Check that the spacing between capacitors is appropriate – 2 cm. minimum is usually standard. If there is forced air in your system, ensure the flow is appropriate and this is not causing heat transfer from one component to the next.
- If cabling or terminal heating is abnormal, ensure terminals are tightened to the appropriate torque, and that cables are not worn. Power down the system before adjusting.

Check Capacitance

Depending on the system, you will want to power down and make certain any three phase transformers are disconnected to ensure the proper measurement of the capacitor. Also, check that the capacitors are discharged before measuring capacitance. A charged capacitor can cause shock and/or damage to the equipment otherwise.

- Check the voltage across the capacitor phase-to-phase as well as phase-to-neutral. The voltage across the capacitors should be zero.
- Check the capacitance per the configuration Y, delta, and neutral connected. All phases of the capacitor should read within a single digit % of each other. A larger capacitance difference between phases is cause for further investigation.
- It is also good practice to measure the capacitance at more than one frequency.

Check Current

Checking current will need to be completed with a live system, so exercise caution.

- Using a current clamp CT, a best practice is to measure the current through the PFC system's current transformer and calculate the current on the line (this measurement can be used to validate the PFC panel).

- The CT ratio should be multiplied by the current measurement to calculate the current through the line/phase of the capacitor. The current measured will be the RMS (Root Mean Square) current through the capacitor (this current includes harmonics). Ensure the RMS current is acceptable for the capacitor rating and design.

Each current measurement on each phase should be within a single digit percentage of one another. Any phase imbalance will require deeper investigation.

- If the CT current is in question (measurement is high or low), measuring the line current for each phase into the capacitor would be the next step. As the current is much higher in the line than on the PFC system's current transformer, ensure the current clamp and meters are configured so as to measure the higher current.

Check Voltage

A check of the voltage will also need to be completed with a live system (use caution).

- Check the RMS voltage for each phase measuring from phase-to-phase and also phase-to-neutral.
- Check that your voltage measurements comply with the capacitor design limits. Each phase should be within a single percent of one another. Any phase imbalance will require further investigation.

Take a Deeper Dive — Harmonics and Transients

If the RMS measurements were within specifications, a study of the current and voltage harmonics would be a good idea. This will help you to understand power fluctuations due to transient loads from variable speed drives and any other nonlinear loads. Checking for systems tuned to harmonics is also a best practice when troubleshooting a faulty PFC system.

In Conclusion, Continued, Regular Maintenance

Yearly visual inspection of the PFC system is a good practice to certify the system is in good working order. It can become quite costly if routine maintenance is not completed as the cabling, capacitors and reactors may become damaged and require replacement. By maintaining the PFC system this can be avoided the expensive cost of replacement can be kept in check.

About CDE

CDE is a leading provider of film capacitors for industrial, medical and specialized applications serving original equipment manufacturers (OEM) and distributors. The company has world-class design, manufacturing and testing facilities in New Bedford, Massachusetts and global manufacturing facilities in China and India to enable quick turn-around for shipping and delivery worldwide.

CDE capacitors are among the world's most reliable components. Our extensive custom design and development capabilities coupled with broad, standardized product offerings allow us to provide intelligent capacitor solutions that meet or exceed our customers' application requirements.

Our aim is to be the best and most sought after provider of capacitor solutions for specialty markets.

CD Aero

A Division of Cornell Dubilier Electronics, Inc.

CDE Corp.
167 John Vertente Blvd.
New Bedford, MA 02745
Tel: +1-508-910-3500
Fax: +1-508-995-3000
www.CDE.com

Copyright 2017, CDE Corp. All rights reserved.
CDE is a registered trademark and AeroPower is a trademark of CDE Corp.

PF01704 Printed in the USA

Type PFCH, 3-Phase AC Power Harmonic Filter Capacitors

Type PFCH 3-phase series capacitors are designed to filter undesirable harmonics at the AC output of large inverter system. Each PFCH capacitor is made with three self-healing metallized polypropylene windings, connected in delta, enclosed in a cylindrical aluminum case and filled with an environmentally friendly fluid. Typical applications include wind turbine PFC controllers, solar inverter output filters, and power line conditioning.

Highlights

- For 3-phase AC power harmonic filtering
- Delta connected
- Discharge resistors included
- UL810 approved internal pressure interrupter

Specifications

Capacitance Tolerance	0 to +10%
Rated Frequency (f_R)	50 Hz and 60 Hz
Rated AC Voltages (V_R)	240 Vac, 480 Vac, 600 Vac
Operating Temperature Range	–40 °C to +55 °C
kvar Range	0.5 kvar to 30.2 kvar
Maximum Permissible Voltage (Vmax)	110% of rated rms voltage 120% of rated peak voltage (1.2 x √2x Vrms)
Internal Connection	Delta (Δ)
Maximum Permissible Current (Imax)	135% of nominal rms current based on rated kvar and rated voltage - (up to 150% of I_R including combined effects of harmonics, over voltages and capacitances, tolerance)
Life	60,000 h w/94% survival rate
International Standards	Meets IEEE18, Standard (ANSI/IEEE Standard 18)
FIT (Failure In Time)	≤300 X 10^9 component h
Maximum Short Circuit Current	10 kA (according to UL 810)
Mechanical and Electrical Safety	Pressure Interrupter (PI) disengages all 3 phases in the event of capacitor end of life or overload
Discharge Resistor Time	≤ 60 seconds ≤ 50 V for 600 V or less; over 600 V ≤ 5 minutes
RoHS Compliant	

Dimensions

Dimensions

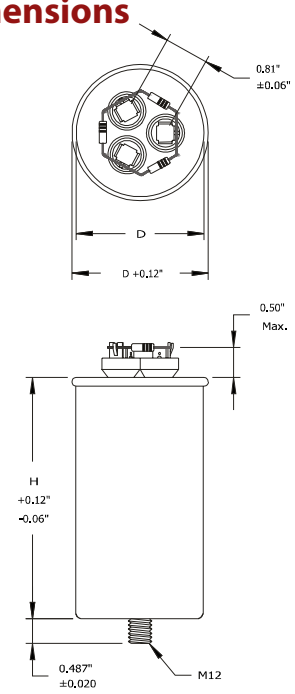

Max torque 88.5 in-lbs.

Figure 1

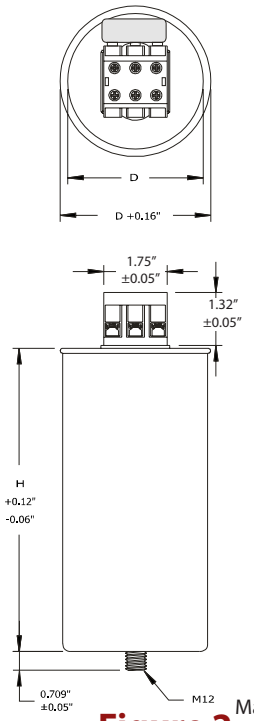

Max torque 88.5 in-lbs.

Figure 2

Construction Details	
Case Material	Extruded aluminum with steel or aluminum cover
Encapsulation	Environmentally safe dielectric fluid
Terminal Material	Tin plated copper, brass or steel

Type PFCH, 3-Phase AC Power Harmonic Filter Capacitors

Part Numbering System

PFC	H	T	480	C	6	S	779	T
Type		**Base Type**	**Voltage (Vac)**	**Case Material**	**kvar**	**Tolerance (%)**	**Can Height (inches)**	**Phases**
PFC	**H** = Harmonic	**S** = 2″ Round **T** = 2½″ Round **V** = 3″ Round **X** = 3.5″ Round **Y** = 4.0" Round **Z** = 4.5" Round	**24** = 240 **48** = 480 **60** = 600	**C** = Aluminum case w/steel cover M12 Stud **D** = Aluminum case w/aluminum cover M12 Stud	**Full kvar value** including decimals @ 60 Hz and	**S** = 0/+10%	**Expressed as 3 digit** number of the case height from base to top of lip (including seam) rounded and displayed without decimal point	**T** = 3-Phase

Ratings

NOTE: Other ratings, sizes and performance specifications are available. Contact us.

CDE Catalog Number	60Hz Output Kvar	50Hz Output Kvar	Capacitance (µF)	R_s (mΩ)	R_{th} (°C/W)	Max Power (W) 55°C	65°C	70°C	Case Diameter (in)	Height (in)	SA (in²)	Style
240 Vac												
PFCHS24C0.5S572T	0.5	0.4	3 x 7.7	5.8	6.6	4.5	3.0	2.3	2.0	5.72	42	Fig. 1
PFCHS24C1S572T	1	0.8	3 x 15.4	4.2	6.6	4.5	3.0	2.3	2.0	5.72	42	
PFCHS24C1.5S572T	1.5	1.3	3 x 23.0	3.7	6.6	4.5	3.0	2.3	2.0	5.72	42	
PFCHT24C2S572T	2	1.7	3 x 30.7	3.4	5.1	5.9	3.9	2.9	2.5	5.72	55	
PFCHT24C2.5S572T	2.5	2.1	3 x 38.4	3.2	5.1	5.9	3.9	2.9	2.5	5.72	55	
PFCHT24C3S572T	3	2.5	3 x 46.1	3.1	5.1	5.9	3.9	2.9	2.5	5.72	55	
PFCHT24C4S778T	4	3.3	3 x 61.4	4.5	4.0	7.6	5.1	3.8	2.5	7.78	71	
PFCHV24D5S842T	5	4.2	3 x 76.8	1.8	3.0	10.0	6.7	5.0	3.0	8.42	94	Fig. 2
PFCHV24D6S842T	6	5.0	3 x 92.1	1.7	3.0	10.0	6.7	5.0	3.0	8.42	94	
PFCHV24D6.3S842T	6.3	5.3	3 x 96.7	1.6	3.0	10.0	6.7	5.0	3.0	8.42	94	
PFCHV24D7.5S108T	7.5	6.3	3 x 115.1	2.2	2.4	12.4	8.3	6.2	3.0	10.78	116	
PFCHV24D8.3S108T	8.3	6.9	3 x 127.4	2.1	2.4	12.4	8.3	6.2	3.0	10.78	116	
PFCHX24D10S108T	10	8.3	3 x 153.5	2.0	2.0	14.8	9.8	7.4	3.5	10.78	138	
PFCHX24D12.5S108T	12.5	10.4	3 x 191.9	1.8	2.0	14.8	9.8	7.4	3.5	10.78	138	
PFCHX24D15S137T	15	12.5	3 x 230.3	2.4	1.7	18.2	12.2	9.1	3.5	13.73	170	
PFCHX24D16.7S137T	16.7	13.9	3 x 256.4	2.3	1.7	18.2	12.2	9.1	3.5	13.73	170	
PFCHX24D17.5S137T	17.5	14.6	3 x 268.6	2.2	1.7	18.2	12.2	9.1	3.5	13.73	170	
480 Vac												
PFCHS48C0.5S572T	0.5	0.4	3 x 1.9	11.3	6.6	4.5	3.0	2.3	2.0	5.72	42	Fig. 1
PFCHS48C1S572T	1	0.8	3 x 3.8	6.9	6.6	4.5	3.0	2.3	2.0	5.72	42	
PFCHS48C1.5S572T	1.5	1.3	3 x 5.8	5.4	6.6	4.5	3.0	2.3	2.0	5.72	42	
PFCHS48C2S572T	2	1.7	3 x 7.7	4.7	6.6	4.5	3.0	2.3	2.0	5.72	42	
PFCHS48C2.5S572T	2.5	2.1	3 x 9.6	4.3	6.6	4.5	3.0	2.3	2.0	5.72	42	
PFCHS48C3S572T	3	2.5	3 x 11.5	4.0	6.6	4.5	3.0	2.3	2.0	5.72	42	
PFCHT48C4S572T	4	3.3	3 x 15.4	3.6	5.1	5.9	3.9	2.9	2.5	5.72	55	
PFCHT48C5S572T	5	4.2	3 x 19.2	3.4	5.1	5.9	3.9	2.9	2.5	5.72	55	

Type PFCH, 3-Phase AC Power Harmonic Filter Capacitors

CDE Catalog Number	60Hz Output Kvar	50Hz Output Kvar	Capacitance (µF)	R_s (mΩ)	R_{th} (°C/W)	Max Power (W) 55°C	65°C	70°C	Case Diameter (in)	Height (in)	SA (in²)	Style
480 Vac												
PFCHT48C6S778T	6	5.0	3 x 23.0	5.3	4.0	7.6	5.1	3.8	2.5	7.78	71	
PFCHT48C7.5S778T	7.5	6.3	3 x 28.8	4.9	4.0	7.6	5.1	3.8	2.5	7.78	71	**Fig. 1**
PFCHT48C8.3S778T	8.3	6.9	3 x 31.9	4.8	4.0	7.6	5.1	3.8	2.5	7.78	71	
PFCHV48D9S842T	9	7.5	3 x 34.5	2.2	3.0	10.0	6.7	5.0	3.0	8.42	94	
PFCHV48D10S842T	10	8.3	3 x 38.4	2.1	3.0	10.0	6.7	5.0	3.0	8.42	94	
PFCHV48D12.5S108T	12.5	10.4	3 x 48.0	2.8	2.4	12.4	8.3	6.2	3.0	10.78	116	
PFCHV48D15S108T	15	12.5	3 x 57.6	2.6	2.4	12.4	8.3	6.2	3.0	10.78	116	
PFCHX48D16.7S108T	16.7	13.9	3 x 64.1	2.4	2.0	14.8	9.8	7.4	3.5	10.78	138	**Fig. 2**
PFCHX48D18S108T	18	15.0	3 x 69.1	2.3	2.0	14.8	9.8	7.4	3.5	10.78	138	
PFCHX48D20S108T	20	16.7	3 x 76.8	2.2	2.0	14.8	9.8	7.4	3.5	10.78	138	
PFCHX48D25S137T	25	20.8	3 x 95.9	2.9	1.7	18.2	12.2	9.1	3.5	13.73	170	
PFCHX48D30S137T	30	25.0	3 x 115.1	2.7	1.7	18.2	12.2	9.1	3.5	13.73	170	
600Vac												
PFCHS60C1S572T	1	0.8	3 x 2.5	7.4	6.6	4.5	3.0	2.3	2.0	5.72	42	
PFCHS60C1.5S572T	1.5	1.3	3 x 3.7	5.9	6.6	4.5	3.0	2.3	2.0	5.72	42	
PFCHS60C2S572T	2	1.7	3 x 4.9	5.1	6.6	4.5	3.0	2.3	2.0	5.72	42	
PFCHS60C2.5S572T	2.5	2.1	3 x 6.1	4.6	6.6	4.5	3.0	2.3	2.0	5.72	42	
PFCHT60C3S572T	3	2.5	3 x 7.4	4.2	5.1	5.9	3.9	2.9	2.5	5.72	55	
PFCHT60C4S572T	4	3.3	3 x 9.8	3.8	5.1	5.9	3.9	2.9	2.5	5.72	55	**Fig. 1**
PFCHT60C5S778T	5	4.2	3 x 12.3	5.9	4.0	7.6	5.1	3.8	2.5	7.78	71	
PFCHT60C6S778T	6	5.0	3 x 14.7	5.5	4.0	7.6	5.1	3.8	2.5	7.78	71	
PFCHT60C6.1S778T	6.1	5.1	3 x 15.0	5.5	4.0	7.6	5.1	3.8	2.5	7.78	71	
PFCHT60C6.3S778T	6.3	5.3	3 x 15.5	5.4	4.0	7.6	5.1	3.8	2.5	7.78	71	
PFCHT60C6.9S778T	6.9	5.8	3 x 16.9	5.3	4.0	7.6	5.1	3.8	2.5	7.78	71	
PFCHV60D7.5S842T	7.5	6.3	3 x 18.4	2.6	3.0	10.0	6.7	5.0	3.0	8.42	94	
PFCHV60D8.1S842T	8.1	6.8	3 x 19.9	2.5	3.0	10.0	6.7	5.0	3.0	8.42	94	
PFCHV60D8.3S842T	8.3	6.9	3 x 20.4	2.5	3.0	10.0	6.7	5.0	3.0	8.42	94	
PFCHV60D10S108T	10	8.3	3 x 24.6	3.6	2.4	12.4	8.3	6.2	3.0	10.78	116	
PFCHV60D12.2S108T	12.2	10.2	3 x 30.0	3.1	2.4	12.4	8.3	6.2	3.0	10.78	116	
PFCHV60D12.5S108T	12.5	10.4	3 x 30.7	3.1	2.4	12.4	8.3	6.2	3.0	10.78	116	
PFCHX60D13.8S108T	13.8	11.5	3 x 33.9	2.9	2.0	14.8	9.8	7.4	3.5	10.78	138	
PFCHX60D14.6S108T	14.6	12.2	3 x 35.9	2.8	2.0	14.8	9.8	7.4	3.5	10.78	138	**Fig. 2**
PFCHX60D15S108T	15	12.5	3 x 36.8	2.8	2.0	14.8	9.8	7.4	3.5	10.78	138	
PFCHX60D16.7S108T	16.7	13.9	3 x 41.0	2.6	2.0	14.8	9.8	7.4	3.5	10.78	138	
PFCHX60D17.5S108T	17.5	14.6	3 x 43.0	2.5	2.0	14.8	9.8	7.4	3.5	10.78	138	
PFCHX60D20S137T	20	16.7	3 x 49.1	3.6	1.7	18.2	12.2	9.1	3.5	13.73	170	
PFCHX60D22.5S137T	22.5	18.8	3 x 55.3	3.4	1.7	18.2	12.2	9.1	3.5	13.73	170	
PFCHX60D25S137T	25	20.8	3 x 61.4	3.2	1.7	18.2	12.2	9.1	3.5	13.73	170	

Performance Notes

R_s: Equivalent series resistance – Ohmic resistances (Ohm)
Dielectric Dissipation Factor: tan δ (Polypropylene: 0.0002)
T_{hs}: Hot spot temperature within the capacitor: $T_{hs} = T_a + (P_{total} \cdot 280 / SA)$
T_a: Ambient temperature
R_{th}: Thermal resistance: °C/ Watt, indicates hot spot temperature rise due to power dissipation losses
P_{max}: Maximum power dissipation: $P_{max} = (85\ ºC - T_a) / R_{th}$ (Watts)
P_{Total}: Total Power generated by Dielectric and Ohmic Losses: $P = V_{peak}^2 \cdot C \cdot \pi \cdot F \cdot DF$ (Watts) given Voltage
$P = I^2 \cdot [R_s + (X_C \cdot DF)]$ (Watts) given Current

Where $P_{Total} = P_{Fund} + P_{Harm1} + P_{Harm2} + ... + P_{Harm\infty}$
Design life: 60,000 hours 94% survival T_{hs}: 85 °C

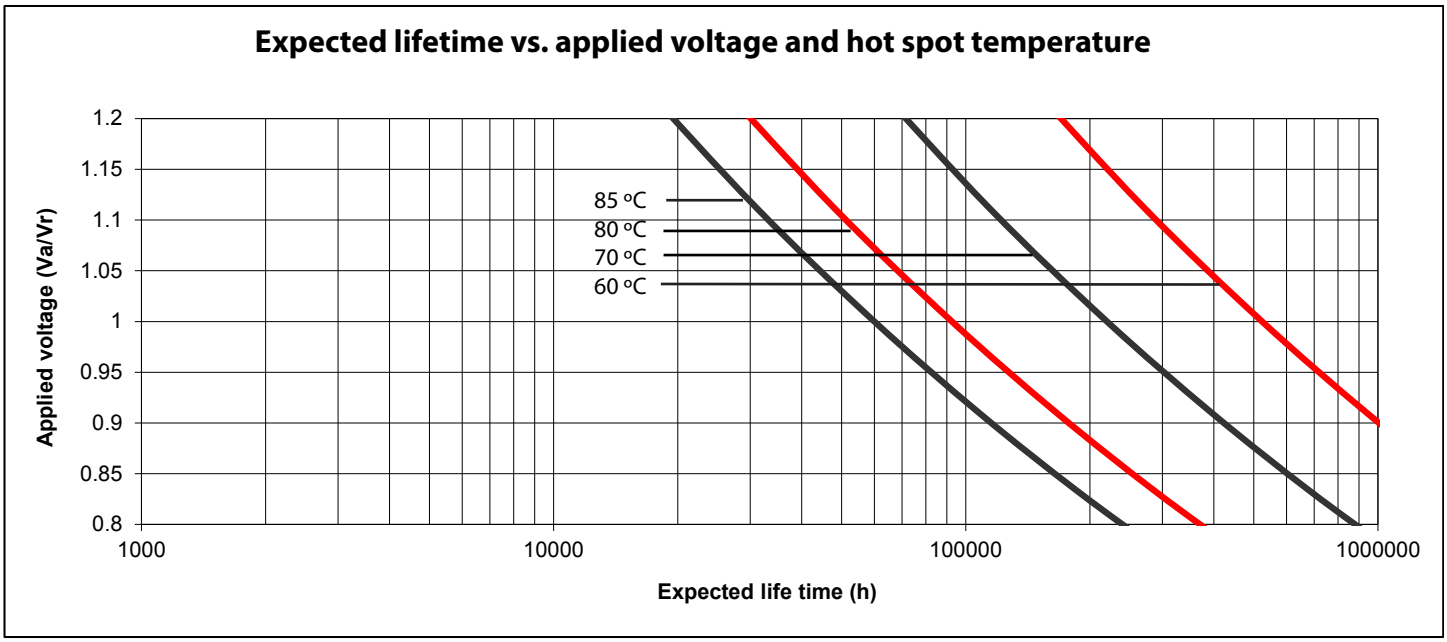

Notice and Disclaimer: All product drawings, descriptions, specifications, statements, information and data (collectively, the "Information") in this datasheet or other publication are subject to change. The customer is responsible for checking, confirming and verifying the extent to which the Information contained in this datasheet or other publication is applicable to an order at the time the order is placed. All Information given herein is believed to be accurate and reliable, but it is presented without any guarantee, warranty, representation or responsibility of any kind, expressed or implied. Statements of suitability for certain applications are based on the knowledge that the Cornell Dubilier company providing such statements ("Cornell Dubilier") has of operating conditions that such Cornell Dubilier company regards as typical for such applications, but are not intended to constitute any guarantee, warranty or representation regarding any such matter – and Cornell Dubilier specifically and expressly disclaims any guarantee, warranty or representation concerning the suitability for a specific customer application, use, storage, transportation, or operating environment. The Information is intended for use only by customers who have the requisite experience and capability to determine the correct products for their application. Any technical advice inferred from this Information or otherwise provided by Cornell Dubilier with reference to the use of any Cornell Dubilier products is given gratis (unless otherwise specified by Cornell Dubilier), and Cornell Dubilier assumes no obligation or liability for the advice given or results obtained. Although Cornell Dubilier strives to apply the most stringent quality and safety standards regarding the design and manufacturing of its products, in light of the current state of the art, isolated component failures may still occur. Accordingly, customer applications which require a high degree of reliability or safety should employ suitable designs or other safeguards (such as installation of protective circuitry or redundancies or other appropriate protective measures) in order to ensure that the failure of an electrical component does not result in a risk of personal injury or property damage. Although all product-related warnings, cautions and notes must be observed, the customer should not assume that all safety measures are indicated in such warnings, cautions and notes, or that other safety measures may not be required.

Type PFCS, 3-Phase AC Power Factor Correction Capacitors

Type PFCS 3-phase series capacitors are designed for power factor correction in automatic PFC controllers. Each PFCS capacitor is made with three self-healing metallized polypropylene windings, connected in delta, enclosed in a cylindrical aluminum case and filled with an environmentally friendly fluid.

Highlights

- For 3-phase AC Power Factor Correction
- Delta connected
- Discharge resistors included
- UL810 approved internal pressure interrupter

Specifications

Capacitance Tolerance	0 to +10%
Rated Frequency (f_R)	50 Hz and 60 Hz
Rated AC Voltages (V_R)	240 Vac, 480 Vac, 600 Vac
Operating Temperature Range	–40 °C to +55 °C
kvar Range	0.5 kvar to 30.2 kvar
Maximum Permissible Voltage (Vmax)	110% of rated rms voltage 120% of rated peak voltage (1.2 x √2x Vrms)
Internal Connection	Delta (Δ)
Maximum Permissible Current (Imax)	135% of nominal rms current based on rated kvar and rated voltage - (up to 150% of I_R including combined effects of harmonics, over voltages and capacitances, tolerance)
Life	60,000 h w/94% survival rate
International Standards	Meets IEEE18, Standard (ANSI/IEEE Standard 18)
FIT (Failure In Time)	≤300 X 10^9 component h
Maximum Short Circuit Current	10 kA (according to UL 810)
Mechanical and Electrical Safety	Pressure Interrupter (PI) disengages all 3 phases in the event of capacitor end of life or overload
Discharge Resistor Time	≤ 60 seconds ≤ 50 V for 600 V or less; over 600 V ≤ 5 minutes
RoHS Compliant	

Dimensions

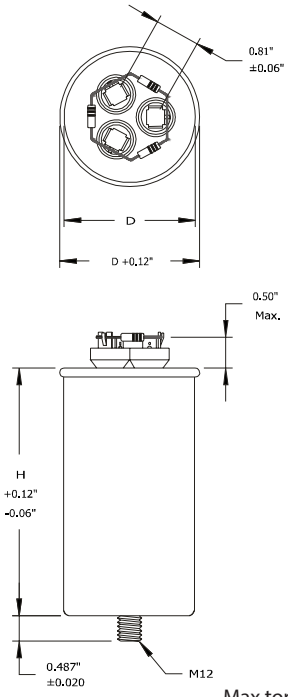

Max torque 88.5 in-lbs.

Figure 1

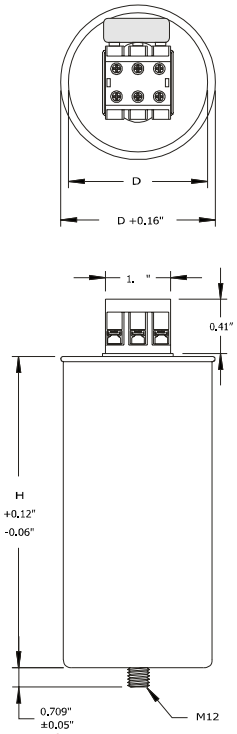

Max torque 88.5 in-lbs.

Figure 2

Construction Details	
Case Material	Extruded aluminum with steel or aluminum cover
Encapsulation	Environmentally safe dielectric fluid
Terminal Material	Tin plated copper, brass or steel

Type PFCS, 3-Phase AC Power Factor Correction Capacitors

Part Numbering System

PFC	S	T	480	C	6	S	779	T
Type		**Base Type**	**Voltage (Vac)**	**Case Material**	**kvar**	**Tolerance (%)**	**Can Height (inches)**	**Phases**
PFC	**S** = Std.	**S** = 2″ Round **T** = 2½″ Round **V** = 3″ Round **X** = 3.5″ Round **Y** = 4.0" Round **Z** = 4.5" Round	**24** = 240 **48** = 480 **60** = 600	**C** = Aluminum case w/steel cover M12 Stud **D** = Aluminum case w/aluminum cover M12 Stud	**Full kvar value** including decimals @ 60 Hz and	**S** = 0/+10%	**Expressed as 3 digit** rounded and displayed without decimal point	**T** = 3-Phase

Ratings

NOTE: Other ratings, sizes and performance specifications are available. Contact us.

CDE Catalog Number	60Hz Output Kvar	60Hz I_R (A)	50Hz Output Kvar	50Hz I_R (A)	Capacitance (µF)	Case Diameter (in)	Case Height (in)	Style
			240Vac					
PFCSS24C0.5S572T	0.5	1.2	0.4	1.0	3 x 7.7	2.0	5.72	Fig. 1
PFCSS24C1S572T	1	2.4	0.8	2.0	3 x 15.4	2.0	5.72	
PFCSS24C1.5S572T	1.5	3.6	1.3	3.0	3 x 23.0	2.0	5.72	
PFCSS24C2S572T	2	4.8	1.7	4.0	3 x 30.7	2.0	5.72	
PFCSS24C2.5S572T	2.5	6.0	2.1	5.0	3 x 38.4	2.0	5.72	
PFCST24C3S572T	3	7.2	2.5	6.0	3 x 46.1	2.5	5.72	
PFCST24C4S572T	4	9.6	3.3	8.0	3 x 61.4	2.5	5.72	
PFCST24C5S778T	5	12.0	4.2	10.0	3 x 76.8	2.5	7.78	
PFCSV24D6S635T	6	14.4	5.0	12.0	3 x 92.1	3.0	6.35	Fig. 2
PFCSX24D6.3S635T	6.3	15.2	5.3	12.6	3 x 96.7	3.5	6.35	
PFCSX24D7.5S635T	7.5	18.0	6.3	15.0	3 x 115.1	3.5	6.35	
PFCSV24D8.3S842T	8.3	20.0	6.9	16.6	3 x 127.4	3.0	8.42	
PFCSX24D10S842T	10	24.1	8.3	20.0	3 x 153.5	3.5	8.42	
PFCSX24D12.5S842T	12.5	30.1	10.4	25.1	3 x 191.9	3.5	8.42	
PFCSX24D15S108T	15	36.1	12.5	30.1	3 x 230.3	3.5	10.78	
PFCSX24D16.7S108T	16.7	40.2	13.9	33.5	3 x 256.4	3.5	10.78	
PFCSX24D17.5S108T	17.5	42.1	14.6	35.1	3 x 268.6	3.5	10.78	
PFCSX24D20S137T	20	48.1	16.7	40.1	3 x 307.0	3.5	13.73	
			480Vac					
PFCSS48C0.5S572T	0.5	0.6	0.4	0.5	3 x 1.9	2.0	5.72	Fig. 1
PFCSS48C1S572T	1	1.2	0.8	1.0	3 x 3.8	2.0	5.72	
PFCSS48C1.5S572T	1.5	1.8	1.3	1.5	3 x 5.8	2.0	5.72	
PFCSS48C2S572T	2	2.4	1.7	2.0	3 x 7.7	2.0	5.72	
PFCSS48C2.5S572T	2.5	3.0	2.1	2.5	3 x 9.6	2.0	5.72	
PFCSS48C3S572T	3	3.6	2.5	3.0	3 x 11.5	2.0	5.72	

Type PFCS, 3-Phase AC Power Factor Correction Capacitors

CDE Catalog Number	60Hz Output Kvar	60Hz I_R (A)	50Hz Output Kvar	50Hz I_R (A)	Capacitance (µF)	Case Diameter (in)	Case Height (in)	Style
			480Vac					
PFCSS48C4S572T	4	4.8	3.3	4.0	3 x 15.4	2.0	5.72	Fig. 1
PFCST48C5S572T	5	6.0	4.2	5.0	3 x 19.2	2.5	5.72	
PFCST48C6S572T	6	7.2	5.0	6.0	3 x 23.0	2.5	5.72	
PFCST48C7.5S778T	7.5	9.0	6.3	7.5	3 x 28.8	2.5	7.78	
PFCSV48D8.3S635T	8.3	10.0	6.9	8.3	3 x 31.9	3.0	6.35	Fig. 2
PFCSV48D9S635T	9	10.8	7.5	9.0	3 x 34.5	3.0	6.35	
PFCSX48D10S635T	10	12.0	8.3	10.0	3 x 38.4	3.5	6.35	
PFCSV48D12.5S842T	12.5	15.0	10.4	12.5	3 x 48.0	3.0	8.42	
PFCSV48D15S108T	15	18.0	12.5	15.0	3 x 57.6	3.0	10.78	
PFCSV48D16.7S108T	16.7	20.1	13.9	16.7	3 x 64.1	3.0	10.78	
PFCSV48D18S108T	18	21.7	15.0	18.0	3 x 69.1	3.0	10.78	
PFCSV48D20S108T	20	24.1	16.7	20.0	3 x 76.8	3.0	10.78	
PFCSX48D25S108T	25	30.1	20.8	25.1	3 x 95.9	3.5	10.78	
PFCSX48D30S137T	30	36.1	25.0	30.1	3 x 115.1	3.5	13.73	
			600Vac					
PFCSS60C1S572T	1	1.0	0.8	0.8	3 x 2.5	2.0	5.72	Fig. 1
PFCSS60C1.5S572T	1.5	1.4	1.3	1.2	3 x 3.7	2.0	5.72	
PFCSS60C2S572T	2	1.9	1.7	1.6	3 x 4.9	2.0	5.72	
PFCSS60C2.5S572T	2.5	2.4	2.1	2.0	3 x 6.1	2.0	5.72	
PFCSS60C3S572T	3	2.9	2.5	2.4	3 x 7.4	2.0	5.72	
PFCSS60C4S572T	4	3.8	3.3	3.2	3 x 9.8	2.0	5.72	
PFCST60C5S572T	5	4.8	4.2	4.0	3 x 12.3	2.5	5.72	
PFCST60C6S572T	6	5.8	5.0	4.8	3 x 14.7	2.5	5.72	
PFCST60C6.1S572T	6.1	5.9	5.1	4.9	3 x 15.0	2.5	5.72	
PFCST60C6.3S572T	6.3	6.1	5.3	5.1	3 x 15.5	2.5	5.72	
PFCST60C6.9S778T	6.9	6.6	5.8	5.5	3 x 16.9	2.5	7.78	
PFCSV60D7.5S635T	7.5	7.2	6.3	6.0	3 x 18.4	3.0	6.35	Fig. 2
PFCSV60D8.1S635T	8.1	7.8	6.8	6.5	3 x 19.9	3.0	6.35	
PFCSV60D8.3S635T	8.3	8.0	6.9	6.7	3 x 20.4	3.0	6.35	
PFCSX60D10S635T	10	9.6	8.3	8.0	3 x 24.6	3.5	6.35	
PFCSV60D12.2S842T	12.2	11.7	10.2	9.8	3 x 30.0	3.0	8.42	
PFCSV60D12.5S842T	12.5	12.0	10.4	10.0	3 x 30.7	3.0	8.42	
PFCSV60D13.8S842T	13.8	13.3	11.5	11.1	3 x 33.9	3.0	8.42	
PFCSV60D14.6S108T	14.6	14.0	12.2	11.7	3 x 35.9	3.0	10.78	
PFCSV60D15S108T	15	14.4	12.5	12.0	3 x 36.8	3.0	10.78	
PFCSV60D16.7S108T	16.7	16.1	13.9	13.4	3 x 41.0	3.0	10.78	
PFCSV60D17.5S108T	17.5	16.8	14.6	14.0	3 x 43.0	3.0	10.78	
PFCSV60D20S108T	20	19.2	16.7	16.0	3 x 49.1	3.0	10.78	
PFCSV60D22.5S108T	22.5	21.7	18.8	18.0	3 x 55.3	3.0	10.78	
PFCSX60D25S108T	25	24.1	20.8	20.0	3 x 61.4	3.5	10.78	
PFCSX60D30.2S137T	30.2	29.1	25.2	24.2	3 x 74.2	3.5	13.73	

Notice and Disclaimer: All product drawings, descriptions, specifications, statements, information and data (collectively, the "Information") in this datasheet or other publication are subject to change. The customer is responsible for checking, confirming and verifying the extent to which the Information contained in this datasheet or other publication is applicable to an order at the time the order is placed. All Information given herein is believed to be accurate and reliable, but it is presented without any guarantee, warranty, representation or responsibility of any kind, expressed or implied. Statements of suitability for certain applications are based on the knowledge that the Cornell Dubilier company providing such statements ("Cornell Dubilier") has of operating conditions that such Cornell Dubilier company regards as typical for such applications, but are not intended to constitute any guarantee, warranty or representation regarding any such matter – and Cornell Dubilier specifically and expressly disclaims any guarantee, warranty or representation concerning the suitability for a specific customer application, use, storage, transportation, or operating environment. The Information is intended for use only by customers who have the requisite experience and capability to determine the correct products for their application. Any technical advice inferred from this Information or otherwise provided by Cornell Dubilier with reference to the use of any Cornell Dubilier products is given gratis (unless otherwise specified by Cornell Dubilier), and Cornell Dubilier assumes no obligation or liability for the advice given or results obtained. Although Cornell Dubilier strives to apply the most stringent quality and safety standards regarding the design and manufacturing of its products, in light of the current state of the art, isolated component failures may still occur. Accordingly, customer applications which require a high degree of reliability or safety should employ suitable designs or other safeguards (such as installation of protective circuitry or redundancies or other appropriate protective measures) in order to ensure that the failure of an electrical component does not result in a risk of personal injury or property damage. Although all product-related warnings, cautions and notes must be observed, the customer should not assume that all safety measures are indicated in such warnings, cautions and notes, or that other safety measures may not be required.

Type BLH, DC Link Capacitors for Harsh Environments

85 °C / 85% RH , 1500h @ Vr, AEC-Q200 Qualified

Type BLH DC Link capacitors use the most advanced construction and technology to meet the challenges of harsh environments. Tested for 1,500-hour at 85 °C / 85% relative humidity with rated voltage applied (50% greater than competitive THB test life). The series is qualified to automotive-grade electrical and mechanical testing per standard AEC-Q200.

Highlights

- High capacitance
- High ripple current
- Self-healing and low loss
- THB 85 °C / 85% RH 1500 h at rated voltage

Specifications

Capacitance Range	1 to 170 µF
Capacitance Tolerance	±10% standard , ±5% optional
Rated Voltage	450 to 1200 Vdc
Operating Temperature Range	-40 °C to 105 °C (>85 °C derate voltage 1.35% per °C)
Maximum rms Current	see data tables
Maximum rms Voltage	230 Vac
Test Voltage between Terminals @ 25 °C	150% rated DC voltage for 10 s
Test Voltage between Terminals and Case @ 25°C	3 kVac @ 50/60 Hz for 10 s
Insulation Resistance	≥30,000 MΩxµF @ 100 Vdc 25 °C after 1 minute
Life Expectancy	100,000 h @ 70°C hot spot, rated voltage
THB Rating	85 °C / 85% RH - rated voltage - 1500 h
Reference Standards	IEC 61071, AEC- Q200 qualified (as noted)
RoHS Compliant	

Dimensions

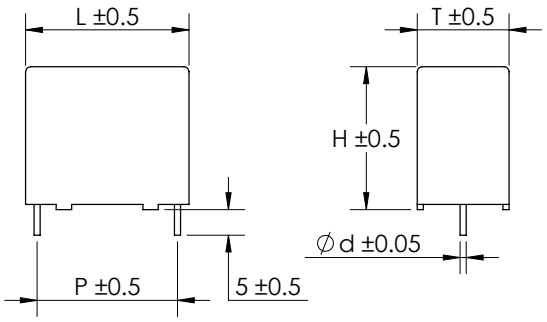

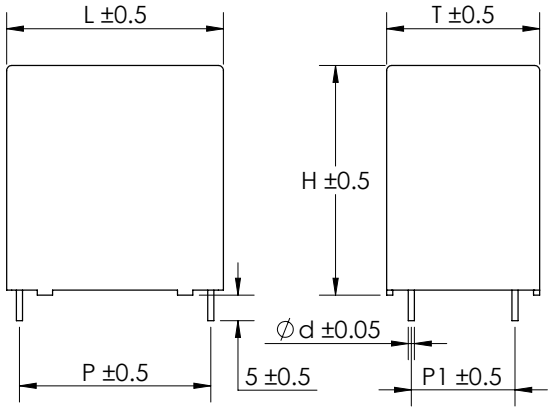

Construction Details	
Case Material	Plastic UL94V-0
Resin Material	Dry Resin UL94V-0
Terminal Material	Tin Plated Copper

UL Recognized E128034
construction only - unprotected

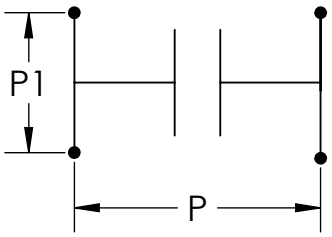

Type BLH, DC Link Capacitors for Harsh Environments

85 °C / 85% RH , 1500h @ Vr, AEC-Q200 Qualified

Part Numbering System

BLH	107	K	701	C13	4
Series	Capacitance	Tolerance	Voltage	Case	Leads
BLH	EIA Cap Code	K = ±10% Standard	451 = 450 Vdc	Case Code	2 = 2 Leads
	305 = 3 µF	J = ±5% Optional	551 = 550 Vdc		4 = 4 Leads
	226 = 22 µF		601 = 600 Vdc		
	107 = 100 µF		701 = 700 Vdc		
			801 = 800 Vdc		
			901 = 900 Vdc		
			102 = 1000 Vdc		
			112 = 1100 Vdc		
			122 = 1200 Vdc		

Ratings

Part Number	Cap C (µF)	Typ ESR 10 kHz (mΩ)	Thermal Res (°C/W)	Irms 10 kHz 70 °C (A)	Typ ESL (nH)	dv/dt (V/µs)	Peak Current (A)	Dimensions L (mm)	H (mm)	T (mm)	P (mm)	P1 (mm)	d (mm)	AEC Q200
450 Vdc														
BLH105K451A012	1	45	51.7	2.5	25	60	60	32	18	9	27.5	\	0.8	Yes
BLH205K451A012	2	30	50.5	3	25	60	120	32	18	9	27.5	\	0.8	Yes
BLH305K451A022	3	20	49.3	4	25	60	180	32	20	11	27.5	\	0.8	Yes
BLH405K451A022	4	18	48.4	4	25	60	240	32	20	11	27.5	\	0.8	Yes
BLH505K451A022	5	12	47.1	5	25	60	300	32	20	11	27.5	\	0.8	Yes
BLH505K451A032	5	11	46.5	5.5	25	60	300	32	22	13	27.5	\	0.8	Yes
BLH106K451A052	10	8.5	23.7	7.5	25	60	600	32	28	14	27.5	\	0.8	Yes
BLH106K451A062	10	8	23.7	9	25	60	600	32	28	18	27.5	\	0.8	Yes
BLH126K451A072	12	7	20.5	10	25	60	720	32	33	18	27.5	\	0.8	Yes
BLH156K451A082	15	6	14.5	11.5	25	60	900	32	37	22	27.5	\	0.8	Yes
BLH156K451B012	15	8.5	15.5	9.5	25	30	450	42.5	18	24	37.5	\	1	Yes
BLH186K451A082	18	6	13.8	10	28	60	1080	32	37	22	27.5	\	0.8	Yes
BLH206K451A082	20	5	12.8	11	28	60	1200	32	37	22	27.5	\	0.8	Yes
BLH226K451A082	22	5	12.8	12.5	28	60	1320	32	37	22	27.5	\	0.8	Yes
BLH256K451B054	25	5.5	12.3	12.5	30	35	875	42.5	37	22	37.5	10.2	1.2	Yes
BLH306K451B084	30	6	11.6	12	30	35	1050	42.5	40	20	37.5	10.2	1.2	Yes
BLH406K451B064	40	5.5	9.3	14	30	35	1400	42.5	37	28	37.5	10.2	1.2	Yes
BLH406K451B094	40	5.2	9.0	15	30	35	1400	42.5	44	24	37.5	10.2	1.2	Yes
BLH406K451C014	40	8	9.5	12	30	35	1400	57.5	22	43	52.5	20.3	1.2	Yes
BLH506K451B104	50	4	11.1	15	30	35	1750	42.5	45	30	37.5	20.3	1.2	Yes
BLH506K451C014	50	6.5	9.5	14	30	35	1750	57.5	22	43	52.5	20.3	1.2	Yes
BLH556K451C064	55	5	9.8	15.5	30	35	1925	57.5	45	30	52.5	20.3	1.2	Yes

*AEC Q200 may be available

Type BLH, DC Link Capacitors for Harsh Environments

85 °C / 85% RH , 1500h @ Vr, AEC-Q200 Qualified

Part Number	Cap C (µF)	Typ ESR 10 kHz (mΩ)	Thermal Res (°C/W)	Irms 10 kHz 70 °C (A)	Typ ESL (nH)	dv/dt (V/µs)	Peak Current (A)	Dimensions L (mm)	H (mm)	T (mm)	P (mm)	P1 (mm)	d (mm)	AEC Q200
450 Vdc														
BLH606K451C064	60	4.5	9.2	16.5	30	35	2100	57.5	45	30	52.5	20.3	1.2	Yes
BLH606K451B104	60	4	8.6	16.5	30	35	2100	42.5	45	30	37.5	20.3	1.2	Yes
BLH806K451C064	80	4	7.4	16	35	20	1600	57.5	45	30	52.5	20.3	1.2	Yes
BLH107K451C084	100	3.8	6.2	18	35	20	2000	57.5	50	35	52.5	20.3	1.2	Yes
BLH137K451C124	130	3.5	5.5	22	35	20	2600	57.5	60	35	52.5	20.3	1.2	*
BLH147K451C134	140	3.4	5.4	24	35	20	2800	57.5	65	35	52.5	20.3	1.2	*
BLH157K451C154	150	3.2	5.2	26	35	20	3000	57.5	70	35	52.5	20.3	1.2	*
BLH167K451C164	160	3.1	5.0	28	35	20	3200	57.5	80	35	52.5	20.3	1.2	*
BLH177K451C164	170	3	4.8	30	35	20	3400	57.5	80	35	52.5	20.3	1.2	*
550 Vdc														
BLH305K551A022	3	28	22.3	4	25	60	180	32	20	11	27.5	\	0.8	Yes
BLH505K551A032	5	14	16.8	6	25	60	300	32	22	13	27.5	\	0.8	Yes
BLH805K551A052	8	12.5	12.6	8.5	25	60	480	32	28	14	27.5	\	0.8	Yes
BLH106K551A072	10	8	12.5	10	25	60	600	32	33	18	27.5	\	0.8	Yes
BLH156K551A082	15	6.5	9.1	12	28	60	900	32	37	22	27.5	\	0.8	Yes
BLH156K551A084	15	5.5	8.1	13	28	60	900	32	37	22	27.5	10.2	1.2	Yes
BLH156K551B012	15	6.5	8.3	10.5	28	60	900	42.5	18	24	37.5	\	1	Yes
BLH206K551B084	20	6.5	9.8	12.5	30	35	700	42.5	40	20	37.5	10.2	1.2	Yes
BLH226K551B084	22	6.5	8.4	13.5	30	35	770	42.5	40	20	37.5	10.2	1.2	Yes
BLH256K551B084	25	6.5	7.3	14.5	30	35	875	42.5	40	20	37.5	10.2	1.2	Yes
BLH306K551B094	30	6	6.5	16	30	35	1050	42.5	44	24	37.5	10.2	1.2	Yes
BLH356K551B104	35	6	5.1	18	30	35	1225	42.5	45	30	37.5	20.3	1.2	Yes
BLH406K551B104	40	5.5	5.1	18	30	35	1400	42.5	45	30	37.5	20.3	1.2	Yes
BLH406K551C014	40	5.8	5.2	16	30	35	1400	57.5	22	43	52.5	20.3	1.2	Yes
BLH506K551B114	50	5	5.0	20	30	35	1750	42.5	50	35	37.5	20.3	1.2	Yes
BLH606K551C064	60	4.8	6.2	18	35	20	1200	57.5	45	30	37.5	20.3	1.2	Yes
BLH756K551C084	75	5	5.0	20	35	20	1500	57.5	50	35	52.5	20.3	1.2	Yes
BLH107K551C114	100	4.5	3.9	24	35	20	2000	57.5	55	45	52.5	20.3	1.2	Yes
BLH117K551C114	110	4	3.7	26	35	20	2200	57.5	55	45	52.5	20.3	1.2	Yes
BLH137K551C124	130	3.4	5.4	23	35	20	2600	57.5	60	35	52.5	20.3	1.2	*
BLH147K551C134	140	3.3	5.3	25	35	20	2800	57.5	65	35	52.5	20.3	1.2	*
BLH157K551C154	150	3.1	5.0	27	35	20	3000	57.5	70	35	52.5	20.3	1.2	*
BLH167K551C164	160	3	4.8	29	35	20	3200	57.5	80	35	52.5	20.3	1.2	*
BLH177K551C164	170	2.8	4.7	32	35	20	3400	57.5	80	35	52.5	20.3	1.2	*
600 Vdc														
BLH305K601A022	3	28	22.3	4	25	60	180	32	20	11	27.5	\	0.8	Yes
BLH405K601A022	4	26	14.3	5	25	60	240	32	20	11	27.5	\	0.8	Yes
BLH505K601A052	5	14.5	26.5	6	25	60	300	32	28	14	27.5	\	0.8	Yes
BLH805K601A052	8	12	17.8	7.5	25	60	480	32	28	14	27.5	\	0.8	Yes
BLH106K601A072	10	7.5	19.8	8.5	25	60	600	32	33	18	27.5	\	0.8	Yes

*AEC Q200 may be available

Type BLH, DC Link Capacitors for Harsh Environments

85 °C / 85% RH , 1500h @ Vr, AEC-Q200 Qualified

Part Number	Cap C (µF)	Typ ESR 10 kHz (mΩ)	Thermal Res (°C/W)	Irms 10 kHz 70 °C (A)	Typ ESL (nH)	dv/dt (V/µs)	Peak Current (A)	Dimensions L (mm)	H (mm)	T (mm)	P (mm)	P1 (mm)	d (mm)	AEC Q200
600 Vdc														
BLH126K601A072	12	7.5	15.8	9.5	25	60	720	32	33	18	27.5	\	0.8	Yes
BLH126K601B012	12	9.5	16.8	8	25	35	420	42.5	18	24	37.5	\	1	Yes
BLH156K601A082	15	7.5	12.1	10.5	28	60	900	32	37	22	27.5	\	0.8	Yes
BLH156K601B012	15	6	16.2	12	28	35	525	42.5	18	24	37.5	\	1	Yes
BLH206K601B084	20	6	13.8	11	30	35	700	42.5	40	20	37.5	10.2	1.2	Yes
BLH306K601B064	30	5.5	10.8	13	30	35	1050	42.5	37	28	37.5	10.2	1.2	Yes
BLH356K601B094	35	5	8.5	16.5	30	35	1225	42.5	44	24	37.5	10.2	1.2	Yes
BLH356K601C014	35	5.5	10.7	13.5	30	20	700	57.5	22	43	52.5	20.3	1.2	Yes
BLH406K601B104	40	4	7.7	18	30	35	1400	42.5	45	30	37.5	20.3	1.2	Yes
BLH506K601C084	50	6.5	7.8	14	35	20	1000	57.5	50	35	52.5	20.3	1.2	Yes
BLH606K601C084	60	5	7.8	16	35	20	1200	57.5	50	35	52.5	20.3	1.2	Yes
BLH706K601C084	70	5	6.2	18	35	20	1400	57.5	50	35	52.5	20.3	1.2	Yes
BLH806K601C114	80	4	6.3	20	35	20	1600	57.5	55	45	52.5	20.3	1.2	Yes
BLH906K601C114	90	4	4.3	24	35	20	1800	57.5	55	45	52.5	20.3	1.2	Yes
BLH107K601C094	100	4	3.7	26	35	20	2000	57.5	53	50	52.5	20.3	1.2	Yes
BLH117K601C094	110	3.5	3.6	28	35	20	2200	57.5	53	50	52.5	20.3	1.2	Yes
BLH127K601C124	120	3.4	3.5	30	35	20	2400	57.5	60	35	52.5	20.3	1.2	*
BLH137K601C134	130	3.3	3.4	32	35	20	2600	57.5	65	35	52.5	20.3	1.2	*
BLH147K601C154	140	3.2	3.4	34	35	20	2800	57.5	70	35	52.5	20.3	1.2	*
BLH147K601C144	140	3.2	3.4	34	35	20	2800	57.5	65	45	52.5	20.3	1.2	Yes
BLH157K601C164	150	3	3.3	36	35	20	3000	57.5	80	35	52.5	20.3	1.2	*
700 Vdc														
BLH105K701A012	1	54	50.6	2.5	25	60	60	32	18	9	27.5	\	0.8	Yes
BLH205K701A012	2	35	49.5	3	25	60	120	32	18	9	27.5	\	0.8	Yes
BLH305K701A022	3	28	47.0	4.5	25	60	180	32	20	11	27.5	\	0.8	Yes
BLH335K701A052	3.3	26	31.5	5.5	25	60	198	32	28	14	27.5	\	0.8	Yes
BLH505K701A052	5	14	26.5	6	25	60	300	32	28	14	27.5	\	0.8	Yes
BLH605K701A062	6	14	16.9	6	25	60	360	32	28	18	27.5	\	0.8	Yes
BLH805K701A072	8	10	12.3	9	25	60	480	32	33	18	27.5	\	0.8	Yes
BLH106K701A072	10	7	14.3	10	25	60	600	32	33	18	27.5	\	0.8	Yes
BLH106K701A082	10	6.5	10.7	12	28	60	600	32	37	22	27.5	\	0.8	Yes
BLH106K701B012	10	7.5	10.1	11.5	30	35	350	42.5	18	24	37.5	\	1	Yes
BLH126K701A082	12	6	9.2	12.5	28	60	720	32	37	22	27.5	\	0.8	Yes
BLH126K701B012	12	7	9.8	12	30	35	420	42.5	18	24	37.5	\	1	Yes
BLH156K701B042	15	9	13.7	9	30	35	525	42.5	33.5	22	37.5	\	1	Yes
BLH156K701B044	15	8	12.5	10	30	35	525	42.5	33.5	22	37.5	10.2	1.2	Yes
BLH156K701B084	15	8	12.5	10	30	35	525	42.5	40	20	37.5	10.2	1.2	Yes
BLH206K701B064	20	7.5	11.6	12	30	35	700	42.5	37	28	37.5	10.2	1.2	Yes
BLH226K701B094	22	6.5	9.3	14	30	35	770	42.5	44	24	37.5	10.2	1.2	Yes

***AEC Q200 may be available**

Type BLH, DC Link Capacitors for Harsh Environments

85 °C / 85% RH , 1500h @ Vr, AEC-Q200 Qualified

Part Number	Cap C (µF)	Typ ESR 10 kHz (mΩ)	Thermal Res (°C/W)	Irms 10 kHz 70 °C (A)	Typ ESL (nH)	dv/dt (V/µs)	Peak Current (A)	Dimensions L (mm)	H (mm)	T (mm)	P (mm)	P1 (mm)	d (mm)	AEC Q200
700 Vdc														
BLH256K701B094	25	6	7.8	16	30	35	875	42.5	44	24	37.5	10.2	1.2	Yes
BLH306K701B104	30	5.8	8.7	16	30	35	1050	42.5	45	30	37.5	20.3	1.2	Yes
BLH306K701C014	30	8.5	9.8	12	30	20	600	57.5	22	43	52.5	20.3	1.2	Yes
BLH356K701B114	35	5.5	6.3	20	30	35	1225	42.5	50	35	37.5	20.3	1.2	Yes
BLH406K701C064	40	5	8.5	14	35	20	800	57.5	45	30	52.5	20.3	1.2	Yes
BLH456K701C064	45	5	7.6	15.5	35	20	900	57.5	45	30	52.5	20.3	1.2	Yes
BLH506K701C084	50	4.8	8.1	15	35	20	1000	57.5	50	35	52.5	20.3	1.2	Yes
BLH556K701C084	55	4.5	8.7	16	35	20	1100	57.5	50	35	52.5	20.3	1.2	Yes
BLH606K701C084	60	4	7.7	18	35	20	1200	57.5	50	35	52.5	20.3	1.2	Yes
BLH656K701C084	65	5	7.7	18	35	20	1300	57.5	50	35	52.5	20.3	1.2	Yes
BLH656K701C114	65	4	6.3	20	35	20	1300	57.5	55	45	52.5	20.3	1.2	Yes
BLH706K701C114	70	3.8	6.3	20	35	20	1400	57.5	55	45	52.5	20.3	1.2	Yes
BLH756K701C114	75	3.8	6.3	20	35	20	1500	57.5	55	45	52.5	20.3	1.2	Yes
BLH806K701C114	80	3.5	5.9	22	35	20	1600	57.5	55	45	52.5	20.3	1.2	Yes
BLH806K701C124	80	3.4	5.8	23	35	20	1600	57.5	60	35	52.5	20.3	1.2	*
BLH906K701C114	90	3.5	5.0	24	35	20	1800	57.5	55	45	52.5	20.3	1.2	Yes
BLH906K701C124	90	3.5	5.0	24	35	20	1800	57.5	60	35	52.5	20.3	1.2	*
BLH107K701C134	100	3.5	5.9	26	35	20	2000	57.5	65	35	52.5	20.3	1.2	*
BLH117K701C154	110	3.4	5.8	28	35	20	2200	57.5	70	35	52.5	20.3	1.2	*
BLH127K701C164	120	3	5.6	30	35	20	2400	57.5	80	35	52.5	20.3	1.2	*
BLH137K701C144	130	2.8	5.4	32	35	20	2600	57.5	65	45	52.5	20.3	1.2	Yes
800 Vdc														
BLH105K801A012	1	62	45.7	2	25	60	60	32	18	9	27.5	\	0.8	Yes
BLH205K801A022	2	31	42.5	3.5	25	60	120	32	20	11	27.5	\	0.8	Yes
BLH305K801A032	3	21	35.4	4.5	25	60	180	32	22	13	27.5	\	0.8	Yes
BLH335K801A052	3.3	25	32.1	4	25	60	198	32	28	14	27.5	\	0.8	Yes
BLH505K801A052	5	12	26.5	6	25	60	300	32	28	14	27.5	\	0.8	Yes
BLH605K801A062	6	10.5	18.6	7.5	25	60	360	32	28	18	27.5	\	0.8	Yes
BLH805K801A072	8	9.5	14.3	9.5	25	60	480	32	33	18	27.5	\	0.8	Yes
BLH905K801A072	9	8.5	9.1	10	25	60	540	32	33	18	27.5	\	0.8	Yes
BLH106K801A082	10	9.5	8.0	11.5	28	60	600	32	37	22	27.5	\	0.8	Yes
BLH106K801B032	10	12.5	15.8	8	30	35	350	42.5	32	19	37.5	\	1	Yes
BLH156K801B084	15	8	12.5	10	30	35	525	42.5	40	20	37.5	10.2	1.2	Yes
BLH206K801B064	20	7	11.6	12	30	35	700	42.5	37	28	37.5	10.2	1.2	Yes
BLH206K801B094	20	6.5	11.8	13.5	30	35	700	42.5	44	24	37.5	10.2	1.2	Yes
BLH226K801B094	22	6	9.3	14	30	35	770	42.5	44	24	37.5	10.2	1.2	Yes
BLH256K801B104	25	5.5	7.5	14	30	35	875	42.5	45	30	37.5	20.3	1.2	Yes
BLH306K801B104	30	4.5	8.7	16	30	35	1050	42.5	45	30	37.5	20.3	1.2	Yes
BLH356K801C064	35	6.5	7.6	14.2	35	20	700	57.5	45	30	52.5	20.3	1.2	Yes
BLH406K801C064	40	6	8.5	14	35	20	800	57.5	45	30	52.5	20.3	1.2	Yes

*AEC Q200 may be available

Type BLH, DC Link Capacitors for Harsh Environments

85 °C / 85% RH , 1500h @ Vr, AEC-Q200 Qualified

Part Number	Cap C (µF)	Typ ESR 10 kHz (mΩ)	Thermal Res (°C/W)	Irms 10 kHz 70 °C (A)	Typ ESL (nH)	dv/dt (V/µs)	Peak Current (A)	Dimensions L (mm)	H (mm)	T (mm)	P (mm)	P1 (mm)	d (mm)	AEC Q200
800 Vdc														
BLH456K801C064	45	5.5	7.6	15.5	35	20	900	57.5	45	30	52.5	20.3	1.2	Yes
BLH476K801C084	47	5	6.5	17.5	35	20	940	57.5	50	35	52.5	20.3	1.2	Yes
BLH506K801C084	50	5	7.8	16	35	20	1000	57.5	50	35	52.5	20.3	1.2	Yes
BLH556K801C084	55	4.6	6.9	17	35	20	1100	57.5	50	35	52.5	20.3	1.2	Yes
BLH656K801C124	65	4	7.3	19	35	20	1300	57.5	60	35	52.5	20.3	1.2	*
BLH656K801C114	65	4	6.3	20	35	20	1300	57.5	55	45	52.5	20.3	1.2	Yes
BLH706K801C114	70	3.8	6.3	20	35	20	1400	57.5	55	45	52.5	20.3	1.2	Yes
BLH706K801C124	70	3.8	6.3	20	35	20	1400	57.5	60	35	52.5	20.3	1.2	*
BLH756K801C114	75	3.8	6.0	22	35	20	1500	57.5	55	45	52.5	20.3	1.2	Yes
BLH756K801C134	75	3.8	6.0	22	35	20	1500	57.5	65	35	52.5	20.3	1.2	*
BLH806K801C144	80	3.5	5.9	23	35	20	1600	57.5	65	45	52.5	20.3	1.2	Yes
BLH806K801C154	80	3.5	5.9	23	35	20	1600	57.5	70	35	52.5	20.3	1.2	*
BLH906K801C144	90	3.3	5.0	25	35	20	1800	57.5	65	45	52.5	20.3	1.2	Yes
BLH906K801C164	90	3.3	5.0	25	35	20	1800	57.5	80	35	52.5	20.3	1.2	*
BLH107K801C144	100	3.2	4.8	28	35	20	2000	57.5	65	45	52.5	20.3	1.2	Yes
900 Vdc														
BLH105K901A012	1	63	46.8	2	25	60	60	32	18	9	27.5	\	0.8	Yes
BLH205K901A022	2	25	44.4	3	25	60	120	32	20	11	27.5	\	0.8	Yes
BLH305K901A032	3	18.5	21.6	5	25	60	180	32	22	13	27.5	\	0.8	Yes
BLH335K901A042	3.3	18.5	21.6	5	25	60	198	32	24.5	15	27.5	\	0.8	Yes
BLH505K901A062	5	12.5	16.3	7	25	60	300	32	28	18	27.5	\	0.8	Yes
BLH605K901A072	6	11	14.2	8	25	60	360	32	33	18	27.5	\	0.8	Yes
BLH805K901A082	8	10	9.1	10.5	28	60	480	32	37	22	27.5	\	0.8	Yes
BLH106K901A082	10	10	6.9	12	28	60	600	32	37	22	27.5	\	0.8	Yes
BLH106K901B082	10	12	11.5	8.5	30	35	350	42.5	40	20	37.5	\	1	Yes
BLH106K901B084	10	11.5	9.6	9.5	30	35	350	42.5	40	20	37.5	10.2	1.2	Yes
BLH156K901B092	15	8	11.3	10.5	30	35	525	42.5	44	24	37.5	\	1	Yes
BLH156K901B094	15	7.5	9.3	12	30	35	525	42.5	44	24	37.5	10.2	1.2	Yes
BLH186K901B092	18	8	11.3	10.5	30	35	630	42.5	44	24	37.5	\	1	Yes
BLH186K901B094	18	7.5	9.3	12	30	35	630	42.5	44	24	37.5	10.2	1.2	Yes
BLH206K901B102	20	6	8.5	14	30	35	700	42.5	45	30	37.5	\	1	Yes
BLH206K901B104	20	5.5	8.1	15	30	35	700	42.5	45	30	37.5	20.3	1.2	Yes
BLH206K901C014	20	8.6	10.5	12	30	20	400	57.5	22	43	52.5	20.3	1.2	Yes
BLH256K901B104	25	5.5	6.3	17	30	35	875	42.5	45	30	37.5	20.3	1.2	Yes
BLH306K901B114	30	5	5.5	19	30	35	1050	42.5	50	35	37.5	20.3	1.2	Yes
BLH306K901C064	30	5.5	8.1	15	35	20	600	57.5	45	30	52.5	20.3	1.2	Yes
BLH356K901C084	35	5.5	7.6	15.5	35	20	700	57.5	50	35	52.5	20.3	1.2	Yes
BLH406K901C084	40	6.5	6.0	16	35	20	800	57.5	50	35	52.5	20.3	1.2	Yes
BLH506K901C084	50	3.6	8.6	18	35	20	1000	57.5	50	35	52.5	20.3	1.2	Yes

*AEC Q200 may be available

Type BLH, DC Link Capacitors for Harsh Environments

85 °C / 85% RH , 1500h @ Vr, AEC-Q200 Qualified

Part Number	Cap C (µF)	Typ ESR 10 kHz (mΩ)	Thermal Res (°C/W)	Irms 10 kHz 70 °C (A)	Typ ESL (nH)	dv/dt (V/µs)	Peak Current (A)	Dimensions L (mm)	H (mm)	T (mm)	P (mm)	P1 (mm)	d (mm)	AEC Q200
900 Vdc														
BLH556K901C124	55	3.5	7.9	19	35	20	1100	57.5	60	35	52.5	20.3	1.2	*
BLH556K901C114	55	3.4	7.4	20	35	20	1100	57.5	55	45	52.5	20.3	1.2	Yes
BLH606K901C114	60	3.4	7.4	20	35	20	1200	57.5	55	45	52.5	20.3	1.2	Yes
BLH656K901C154	65	3.3	7.0	22	35	20	1300	57.5	70	35	52.5	20.3	1.2	*
BLH706K901C114	70	3.2	6.8	24	35	20	1400	57.5	55	45	52.5	20.3	1.2	Yes
BLH706K901C164	70	3.2	6.8	24	35	20	1400	57.5	80	35	52.5	20.3	1.2	*
BLH806K901C144	80	3.2	6.7	25	35	20	1600	57.5	65	45	52.5	20.3	1.2	Yes
1000 Vdc														
BLH105K102A022	1	45	35.6	2.5	25	80	80	32	20	11	27.5	\	0.8	Yes
BLH205K102A032	2	30	27.2	3.5	25	80	160	32	22	13	27.5	\	0.8	Yes
BLH305K102A042	3	25	16.0	5	25	80	240	32	24.5	15	27.5	\	0.8	Yes
BLH505K102A072	5	14	11.2	8	25	80	400	32	33	18	27.5	\	0.8	Yes
BLH805K102A082	8	12	8.3	10	28	80	640	32	37	22	27.5	\	0.8	Yes
BLH106K102B082	10	12	11.5	8.5	30	40	400	42.5	40	20	37.5	\	1	Yes
BLH106K102B084	10	11.5	9.6	9.5	30	40	400	42.5	40	20	37.5	10.2	1.2	Yes
BLH126K102B094	12	9	10.1	10.5	30	40	480	42.5	44	24	37.5	10.2	1.2	Yes
BLH156K102B092	15	8	11.3	10.5	30	40	600	42.5	44	24	37.5	\	1	Yes
BLH156K102B094	15	7.5	9.3	12	30	40	600	42.5	44	24	37.5	10.2	1.2	Yes
BLH156K102B104	15	7.5	6.8	14	30	40	600	42.5	45	30	37.5	20.3	1.2	Yes
BLH156K102C014	15	8.5	7.9	12	30	40	600	57.5	22	43	52.5	20.3	1.2	Yes
BLH206K102B104	20	6.5	6.8	15	30	40	800	42.5	45	30	37.5	20.3	1.2	Yes
BLH256K102B114	25	5.5	5.6	18	30	40	1000	42.5	50	35	37.5	20.3	1.2	Yes
BLH306K102C064	30	5.5	8.1	15	35	25	750	57.5	45	30	52.5	20.3	1.2	Yes
BLH356K102C084	35	5.5	7.1	16	35	25	875	57.5	50	35	52.5	20.3	1.2	Yes
BLH406K102C084	40	5	7.8	16	35	25	1000	57.5	50	35	52.5	20.3	1.2	Yes
BLH406K102C114	40	5	7.6	17	35	25	1000	57.5	55	45	52.5	20.3	1.2	Yes
BLH506K102C114	50	4.5	6.2	19	35	25	1250	57.5	55	45	52.5	20.3	1.2	Yes
BLH506K102C134	50	4.5	6.2	19	35	25	1250	57.5	65	35	52.5	20.3	1.2	*
BLH556K102C154	55	4.4	6.1	20	35	25	1375	57.5	70	35	52.5	20.3	1.2	*
BLH606K102C164	60	4	5.2	22	35	25	1500	57.5	80	35	52.5	20.3	1.2	*
BLH606K102C144	60	4	5.2	22	35	25	1500	57.5	65	45	52.5	20.3	1.2	Yes
1100 Vdc														
BLH105K112A022	1	45	35.6	2.5	25	80	80	32	20	11	27.5	\	0.8	Yes
BLH155K112A032	1.5	30	27.2	3.5	25	80	120	32	22	13	27.5	\	0.8	Yes
BLH205K112A042	2	25	25.0	4	25	80	160	32	24.5	15	27.5	\	0.8	Yes
BLH225K112A052	2.2	16.5	24.2	5	25	80	176	32	28	14	27.5	\	0.8	Yes
BLH335K112A062	3.3	11.5	20.6	6.5	25	80	264	32	28	18	27.5	\	0.8	Yes
BLH405K112A072	4	10.5	14.9	8	25	80	320	32	33	18	27.5	\	0.8	Yes
BLH505K112A082	5	9.5	14.6	8.5	28	80	400	32	37	22	27.5	\	0.8	Yes
BLH685K112B044	6.8	13.5	5.1	12	30	40	272	42.5	33.5	22	37.5	10.2	1.2	Yes

*AEC Q200 may be available

Type BLH, DC Link Capacitors for Harsh Environments

85 °C / 85% RH , 1500h @ Vr, AEC-Q200 Qualified

Part Number	Cap C (µF)	Typ ESR 10 kHz (mΩ)	Thermal Res (°C/W)	Irms 10 kHz 70 °C (A)	Typ ESL (nH)	dv/dt (V/µs)	Peak Current (A)	Dimensions L (mm)	H (mm)	T (mm)	P (mm)	P1 (mm)	d (mm)	AEC Q200
1100 Vdc														
BLH805K112B082	8	14	6.5	10.5	30	40	320	42.5	40	20	37.5	\	1	Yes
BLH805K112B084	8	12.5	5.1	12.5	30	40	320	42.5	40	20	37.5	10.2	1.2	Yes
BLH805K112B054	8	12.5	5.1	12.5	30	40	320	42.5	37	22	37.5	10.2	1.2	Yes
BLH905K112B054	9	12.2	5.0	12.8	30	40	360	42.5	37	22	37.5	10.2	1.2	Yes
BLH106K112B092	10	9	5.7	14	30	40	400	42.5	44	24	37.5	\	1	Yes
BLH106K112B094	10	8.5	5.2	15	30	40	400	42.5	44	24	37.5	10.2	1.2	Yes
BLH126K112B104	12	7.5	5.5	15.5	30	40	480	42.5	45	30	37.5	20.3	1.2	Yes
BLH156K112B104	15	7	5.4	16	30	40	600	42.5	45	30	37.5	20.3	1.2	Yes
BLH186K112B114	18	7.5	5.5	15.5	30	40	720	42.5	50	35	37.5	20.3	1.2	Yes
BLH206K112B114	20	7.2	5.5	16.5	35	40	800	42.5	50	35	37.5	20.3	1.2	Yes
BLH206K112C064	20	8.5	8.2	12	35	25	500	57.5	45	30	52.5	20.3	1.2	Yes
BLH256K112C084	25	8.2	8.0	13	35	25	625	57.5	50	35	52.5	20.3	1.2	Yes
BLH306K112C084	30	5	8.9	15	35	25	750	57.5	50	35	52.5	20.3	1.2	Yes
BLH356K112C124	35	4.9	8.7	16	35	25	875	57.5	60	35	52.5	20.3	1.2	*
BLH406K112C134	40	5.5	6.3	17	35	25	1000	57.5	65	35	52.5	20.3	1.2	*
BLH406K112C114	40	5.5	6.3	17	35	25	1000	57.5	55	45	52.5	20.3	1.2	Yes
BLH456K112C154	45	5.4	6.2	18	35	25	1125	57.5	70	35	52.5	20.3	1.2	*
BLH506K112C144	50	5.2	5.8	19.5	35	25	1250	57.5	65	45	52.5	20.3	1.2	Yes
1200 Vdc														
BLH105K122A022	1	32.5	15.2	4.5	25	90	90	32	20	11	27.5	\	0.8	Yes
BLH205K122A042	2	32.5	12.3	5	25	90	180	32	24.5	15	27.5	\	0.8	Yes
BLH225K122A062	2.2	17	19.4	5.5	25	90	198	32	28	18	27.5	\	0.8	Yes
BLH305K122A062	3	16	12.8	7	25	90	270	32	28	18	27.5	\	0.8	Yes
BLH335K122A072	3.3	13.5	11.6	8	25	90	297	32	33	18	27.5	\	0.8	Yes
BLH505K122A082	5	12	8.3	10	28	90	450	32	37	22	27.5	\	0.8	Yes
BLH505K122B042	5	15.5	11.5	7.5	30	45	225	42.5	33.5	22	37.5	\	1	Yes
BLH605K122B082	6	15.5	11.5	7.5	30	45	270	42.5	40	20	37.5	\	1	Yes
BLH705K122B054	7	15.2	11.0	8	30	45	315	42.5	37	22	37.5	10.2	1.2	Yes
BLH805K122B094	8	12.5	9.9	9	30	45	360	42.5	44	24	37.5	10.2	1.2	Yes
BLH106K122B094	10	10.5	9.5	10	30	45	450	42.5	44	24	37.5	10.2	1.2	Yes
BLH106K122B104	10	8	8.7	12	30	45	450	42.5	45	30	37.5	20.3	1.2	Yes
BLH156K122B114	15	6.5	6.8	15	30	45	675	42.5	50	35	37.5	20.3	1.2	Yes
BLH206K122C064	20	8.5	9.7	13	35	30	600	57.5	45	30	52.5	20.3	1.2	Yes
BLH256K122C084	25	6.5	9.1	15	35	30	750	57.5	50	35	52.5	20.3	1.2	Yes
BLH306K122C114	30	5.5	8.1	17	35	30	900	57.5	55	45	52.5	20.3	1.2	Yes
BLH306K122C124	30	5.5	8.1	17	35	30	900	57.5	60	35	52.5	20.3	1.2	*
BLH356K122C114	35	5	6.9	18	35	30	1050	57.5	55	45	52.5	20.3	1.2	Yes
BLH356K122C154	35	5	6.9	18	35	30	1050	57.5	70	35	52.5	20.3	1.2	*
BLH406K122C144	40	4.5	5.6	20	35	30	1200	57.5	65	45	52.5	20.3	1.2	Yes
BLH456K122C144	45	4.3	5.5	22	35	30	1350	57.5	65	45	52.5	20.3	1.2	Yes

*AEC Q200 may be available

Type BLH, DC Link Capacitors for Harsh Environments

85 °C / 85% RH , 1500h @ Vr, AEC-Q200 Qualified

Typical Performance Curves

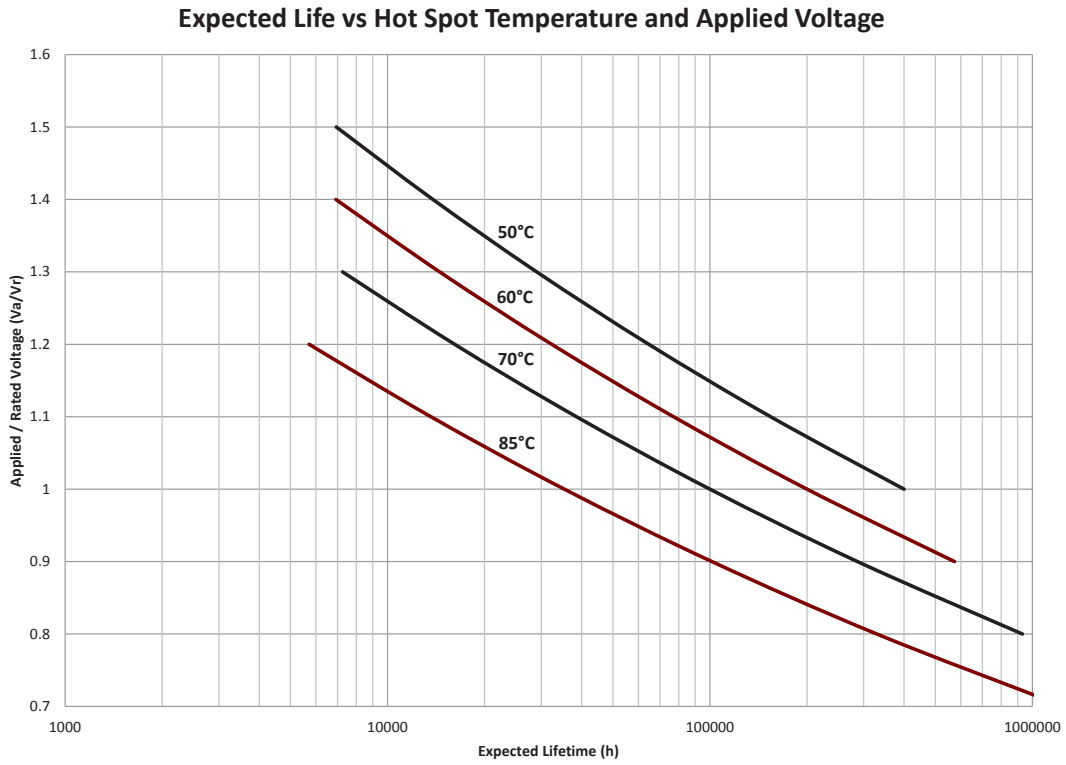

Notice and Disclaimer: All product drawings, descriptions, specifications, statements, information and data (collectively, the "Information") in this datasheet or other publication are subject to change. The customer is responsible for checking, confirming and verifying the extent to which the Information contained in this datasheet or other publication is applicable to an order at the time the order is placed. All Information given herein is believed to be accurate and reliable, but it is presented without any guarantee, warranty, representation or responsibility of any kind, expressed or implied. Statements of suitability for certain applications are based on the knowledge that the Cornell Dubilier company providing such statements ("Cornell Dubilier") has of operating conditions that such Cornell Dubilier company regards as typical for such applications, but are not intended to constitute any guarantee, warranty or representation regarding any such matter – and Cornell Dubilier specifically and expressly disclaims any guarantee, warranty or representation concerning the suitability for a specific customer application, use, storage, transportation, or operating environment. The Information is intended for use only by customers who have the requisite experience and capability to determine the correct products for their application. Any technical advice inferred from this Information or otherwise provided by Cornell Dubilier with reference to the use of any Cornell Dubilier products is given gratis (unless otherwise specified by Cornell Dubilier), and Cornell Dubilier assumes no obligation or liability for the advice given or results obtained. Although Cornell Dubilier strives to apply the most stringent quality and safety standards regarding the design and manufacturing of its products, in light of the current state of the art, isolated component failures may still occur. Accordingly, customer applications which require a high degree of reliability or safety should employ suitable designs or other safeguards (such as installation of protective circuitry or redundancies or other appropriate protective measures) in order to ensure that the failure of an electrical component does not result in a risk of personal injury or property damage. Although all product-related warnings, cautions and notes must be observed, the customer should not assume that all safety measures are indicated in such warnings, cautions and notes, or that other safety measures may not be required.

DCB

Metallized Polypropylene Film Capacitors

Radial Leaded

FEATURES	Small Size - High Voltage - General Purpose
APPLICATIONS	Inverters – DC link – AC/DC Motor Controls – Solar Inverters

Operating Temperature Range		**-40°C to +85°C**				
Capacitance Tolerance		±10% at 1 kHz, 20°C ±5% optional				
Surge Voltage	**WVDC**	**450**	**700**	**900**	**1100**	
	SVDC	560	875	1125	1375	
Repetitive Surge Voltage		**1.15*WVDC (30 minutes MAXIMUM per day)**				
Dissipation Factor 1 kHz, +25C		**C≤20µF**	**20µF<C≤50µF**	**50µF<C≤75µF**	**C>75µF**	
		.2%	.3%	.37%	.45%	
Insulation Resistance @ 20°C (<70% RH) for 1 minute at 100VDC applied		**3000 Megohm x microfarad**				
Self Inductance		<1 nano-Henry per mm of lead spacing and lead length				
Dielectric Strength		**Terminal to Terminal**		**Terminal to Case**		
		150% of VDC applied between terminals for 10 Seconds and 25°C		3kVAC applied between terminals and case for 60 Seconds and 25°C		
Life Expectancy		>100,000 for WVDC at 70°C				
Failure Quota		300/1 x 10^9 component hours				
Construction		Metallized polypropylene film				
Coating		Flame retardant plastic box with epoxy end fill (UL94V-0)				
Lead Terminations		Lead free tinned copper leads (RoHS compliant)				

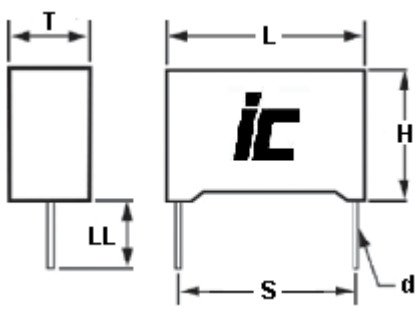

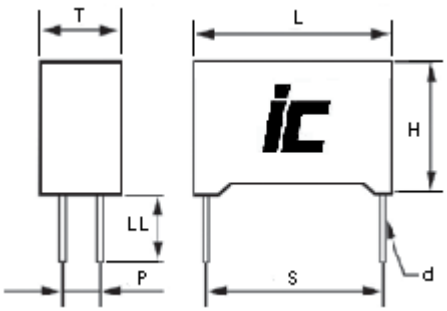

Lead Lengths (LL)

2 leaded capacitors: 5mm+/-1.0 mm
25 mm +/-5 mm (Optional)

4 leaded capacitors: 5.5 mm +/-1.5 mm

Americas / EU
Phone: 1-508-996-8561
Email: cdena@cde.com

CDE ENERGIZING IDEAS
CORNELL DUBILIER
ILLINOIS CAPACITOR

Asia
Phone: 852-2793-0931
Email: cdeasia@cde.com

DCB

2 or 4 Lead Box

WVDC	Capacitance (µF)	IC PART NUMBER	dv/dt (v/µ sec.)	Maximum RMS Ripple Current (A) 10 kHz, +70°C	Typical ESR (mΩ) 10 kHz, +25°C	Dims LxHxT (mm)	S (MM)	d (MM)	P (MM)	# Leads
450	25	256DCB450K2J	10	8	9.3	42.5x33.5x22	37.5	1.2		2
450	30	306DCB450K2J	10	10	8.3	41.5x40x20	37.5	1.2		2
450	40	406DCB450K2J	10	11	7.1	42.5x37x28	37.5	1.2		2
450	40	406DCB450K4J	10	13	6.4	42.5x37x28	37.5	1.2	10.2	4
450	50	506DCB450K4J	10	15	5.5	42.5x45x30	37.5	1.2	20.3	4
450	50	506DCB450K2J	10	13	6.3	42.5x45x30	37.5	1.2		2
450	70	706DCB450K2R	7	14	6	57.5x45x30	52.5	1.2		2
450	70	706DCB450K4R	7	16	5.3	57.5x45x30	52.5	1.2	20.3	4
450	100	107DCB450K4R	7	20	4.2	57.5x50x35	52.5	1.2	20.3	4
450	125	127DCB450K4R	7	22	3.7	57.5x57.5x38	52.5	1.2	20.3	4
700	12.5	126DCB700K2J	13	7.5	11	42.5x30x22	37.5	1.2		2
700	15	156DCB700K2J	13	8	9.5	42.5x33.5x22	37.5	1.2		2
700	15	156DCB700K4J	13	9.5	8.7	42.5x33.5x22	37.5	1.2	10.2	4
700	20	206DCB700K4J	13	12	7.1	42.5x37x28	37.5	1.2	10.2	4
700	20	206DCB700K2J	13	10	7.9	42.5x37x28	37.5	1.2		2
700	22	226DCB700K2J	13	11	7.5	42.5x37x28	37.5	1.2		2
700	22	226DCB700K4J	13	13	6.7	42.5x37x28	37.5	1.2	10.2	4
700	30	306DCB700K2J	13	13	6.3	42.5x45x30	37.5	1.2		2
700	30	306DCB700K4J	13	15	5.5	42.5x45x30	37.5	1.2	20.3	4
700	45	456DCB700K4R	10	16	5.7	57.5x45x30	52.5	1.2	20.3	4
700	45	456DCB700K2R	10	14	6.5	57.5x45x30	52.5	1.2		2
700	55	556DCB700K2R	10	14	5.7	57.5x50x30	52.5	1.2		2
700	55	556DCB700K4R	10	19	4.9	57.5x50x30	52.5	1.2	20.3	4
700	60	606DCB700K4R	10	20	4.7	57.5x50x35	52.5	1.2	20.3	4
700	60	606DCB700K2R	10	14	5.5	57.5x50x35	52.5	1.2	20.3	2
700	75	756DCB700K4R	10	21	4.3	57.5x57.5x38	52.5	1.2	20.3	4
900	10	106DCB900K2J	16	7.5	11	42.5x33.5x22	37.5	1.2		2
900	12	126DCB900K2J	16	9	9.7	41.5x40x20	37.5	1.2		2
900	12	126DCB900K4J	16	11	8.9	41.5x40x20	37.5	1.2	10.2	4
900	15	156DCB900K4J	16	12	7.7	42.5x37x28	37.5	1.2	10.2	4
900	15	156DCB900K2J	16	10	8.5	42.5x37x28	37.5	1.2		2
900	16	166DCB900K2J	16	11	8.2	41.5x44x24	37.5	1.2		2
900	16	166DCB900K4J	16	12.5	7.4	41.5x44x24	37.5	1.2	10.2	4
900	20	206DCB900K4J	16	14	6.4	42.5x45x30	37.5	1.2	20.3	4
900	20	206DCB900K2J	16	12	7.2	42.5x45x30	37.5	1.2		2
900	30	306DCB900K2R	11	13	7	57.5x45x30	52.5	1.2		2
900	30	306DCB900K4R	11	16	6.2	57.5x45x30	52.5	1.2	20.3	4
900	40	406DCB900K4R	11	19	5.2	57.5x50x35	52.5	1.2	20.3	4
900	40	406DCB900K2R	11	14	6	57.5x50x35	52.5	1.2		2
900	50	506DCB900K4R	7.5	21	4.6	57.5x57.5x38	52.5	1.2	20.3	4
1100	7.5	755DCB112K2J	20	7	12	42.5x33.5x22	37.5	1.2		2
1100	10	106DCB112K2J	20	9	9.8	42.5x37x28	37.5	1.2		2
1100	10	106DCB112K4J	20	11	8.9	42.5x37x28	37.5	1.2	10.2	4
1100	12.5	126DCB112K2J	20	11	8.5	42.5x45x30	37.5	1.2		2
1100	12.5	126DCB112K4J	20	12.5	7.7	42.5x45x30	37.5	1.2	20.3	4
1100	20	206DCB112K2R	13	12	8	57.5x45x30	52.5	1.2		2
1100	20	206DCB112K4R	13	14	7.2	57.5x45x30	52.5	1.2	20.3	4
1100	25	256DCB112K2R	13	14	7.1	57.5x50x35	52.5	1.2		2
1100	25	256DCB112K4R	13	16	6.3	57.5x50x35	52.5	1.2	20.3	4
1100	30	306DCB112K4R	13	17.5	5.9	57.5x57.5x38	52.5	1.2	20.3	4
1100	35	356DCB112K4R	13	19	5.4	57.5x57.5x38	52.5	1.2	20.3	4

Americas / EU
Phone: 1-508-996-8561
Email: cdena@cde.com

CDE CORNELL DUBILIER
ENERGIZING IDEAS
ILLINOIS CAPACITOR

Asia
Phone: 852-2793-0931
Email: cdeasia@cde.com

Type 944L Low Inductance DC Link Capacitors

For Fast-switching Inverter Applications

Type 944L DC Link capacitors are specifically designed for fast switching power conversion applications. Their low inductance construction and low-loss winding technology make them ideal for the next generation of high power-dense inverter and converter designs. Their rugged plastic case with integrated mounting flanges, threaded stud or insert termination options, allow for easy, secure mounting. This series is ideal for DC Fast EV Charging and for high power solar inverters and motor drives.

Highlights

- Designed for higher switching frequencies
- Up to 60% lower ESL (Equivalent Series Inductance)
- High ripple current
- M8 threaded stud and M5 insert termination options
- Integrated mounting flanges

Specifications

Capacitance Range	33 to 220 µF
Capacitance Tolerance	±10% standard
Rated Voltage	800 to 1400 Vdc
Operating Temperature Range	-40 ºC to 85 ºC
Maximum rms Current	90A @ 55°C
Maximum rms Voltage	230 Vac
Test Voltage between Terminal @ 25ºC	150% rated DC voltage for 10 s
Test Voltage between Terminals & Case @ 25ºC	4 kVac @ 50/60 Hz for 60 s
Life Test	5000 h @ 85 ºC, rated voltage
Regulatory Information	

Dimensions

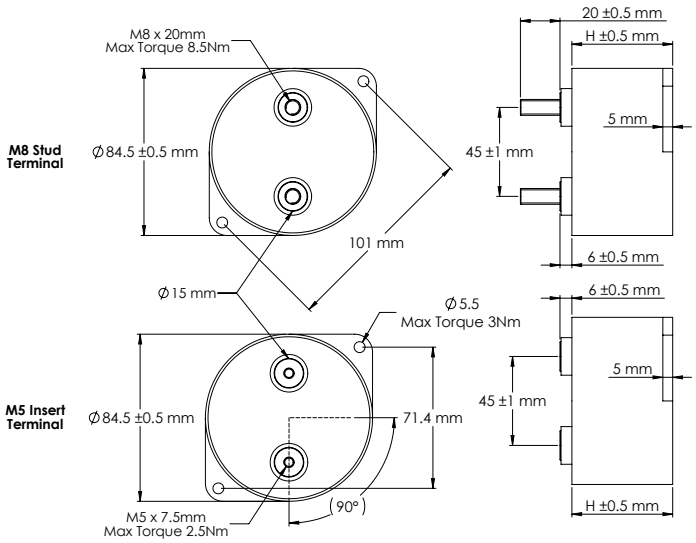

Construction Details	
Case Material	Plastic UL94V-0
Resin Material	Dry Resin UL94V-0
Terminal Material	Tin Plated Brass

UL Recognized E128034
construction only - unprotected

Part Numbering System

944L	101	K	801	A	A	M
Type	**Capacitance**	**Tolerance**	**Voltage**	**Diameter D (mm)**	**Height H (mm)**	**Terminal**
944L	101 = 100 µF	K = ±10%	801 = 800 Vdc	A = 84.5	A = 40	M = M8 Thd Stud
	700 = 70 µF		102 = 1000 Vdc		B = 51	I = M5 Thd Insert
	470 = 47 µF		122 = 1200 Vdc		C = 64	
			142 = 1400 Vdc			

CDE Cornell Dubilier • 1661 E. Rodney French Blvd. • New Bedford, MA 02744 • Phone: (508)996-8561 • Fax: (508)996-3830

Type 944L Low Inductance DC Link Capacitors

For Fast-switching Inverter Applications

Ratings

NOTE: Other ratings, sizes and performance specifications are available. Contact us.

Catalog Part Number	Cap (µF)	Voltage (Vdc)	H Height (mm)	Case Area (mm2)	Typical ESR 10kHz (mΩ)	Typical ESL (nH)	Current T_A=55 °C Irms (A)	Thermal Resistance Θcc (°C/W)	Thermal Resistance Θca (°C/W)	Resonant Frequency (kHz)
944L101K801AA*	100	800	40	21835	0.5	10	90	1.9	3.8	160
944L161K801AB*	160	800	51	24755	0.6	12	84	2.1	3.4	115
944L221K801AC*	220	800	64	28206	0.7	15	78	2.4	3.0	88
944L660K102AA*	66	1000	40	21835	0.5	10	90	1.9	3.8	196
944L101K102AB*	100	1000	51	24755	0.7	12	77	2.1	3.4	146
944L141K102AC*	140	1000	64	28206	0.8	15	73	2.4	3.0	110
944L470K122AA*	47	1200	40	21835	0.6	10	82	1.9	3.8	233
944L700K122AB*	70	1200	51	24755	0.8	12	72	2.1	3.4	174
944L101K122AC*	100	1200	64	28206	0.9	15	69	2.4	3.0	130
944L330K142AA*	33	1400	40	21835	0.7	10	84	0.9	3.8	278
944L520K142AB*	52	1400	51	24755	0.9	12	68	2.1	3.4	202
944L700K142AC*	70	1400	64	28206	1.0	15	65	2.4	3.0	156

*** M = M8 Stud I = M5 Insert**

Typical Performance Curves

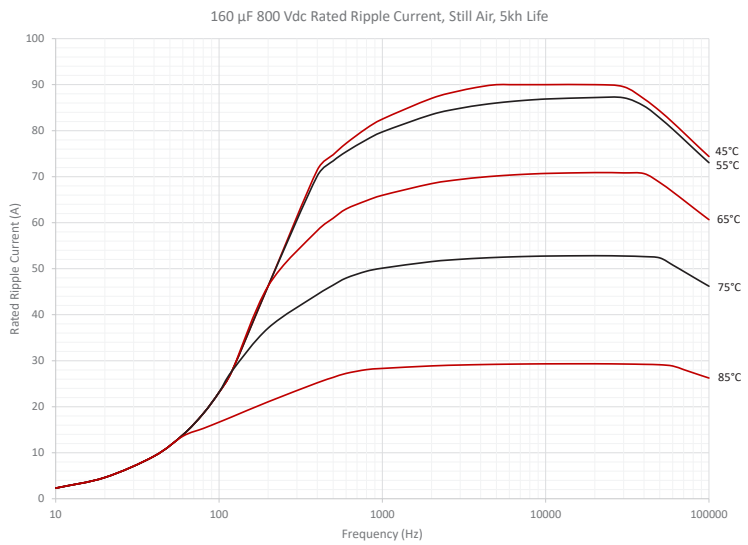

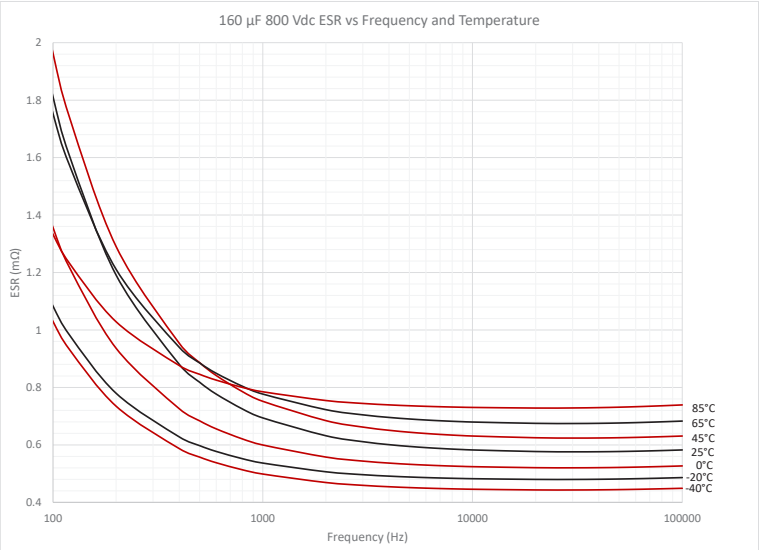

Expected Lifetime Predictions

Capacitance:	C (µF)
Equivalent Series Resistance:	ESR (mΩ)
Frequency:	f (kHz)
Ripple Current:	I (A_{rms})
Ambient Temperature:	T_A (°C)
Core Temperature:	T_C (°C)
Total Thermal Resistance:	Θ (°C/W)
Thermal Resistance case-to-ambient:	Θ_{CA} (°C/W)
Thermal Resistance core-to-case:	Θ_{CC} (°C/W)
Airflow Speed:	v (m/s)
Applied Voltage:	V_A (V_{DC})
Rated Voltage:	V_R (V_{DC})

Determine ESR at Operating Frequency

Use the 10 kHz ESR from the ratings tables.
For operation below 10 kHz, the ESR will need to be adjusted using the following equation: ESR - 31.83/(10C) + 31.83/(fC).

Determine Thermal Resistance at Operating Frequency and Air Flow

Compute $\Theta = \Theta_{CC} + \Theta_{CA}$. In the ratings tables, Θ_{CA} is for still air. For v = 0 to 5 m/s, multiply Θ_{CA} by $[(5 + 17.6(0.1^{0.66})) / (5 + 17.6(v + 0.1)^{0.66})]$

Determine Expected Lifetime

Look up Expected Lifetime on the graph using V_A/V_R and $T_C = T_A + I^2$ (ESR/1000) Θ

The maximum allowed temperature rise is 40 °C and the maximum allowed core temperature is 95 °C.

Expected Lifetime vs Hot Spot Temperature and Applied DC Voltage

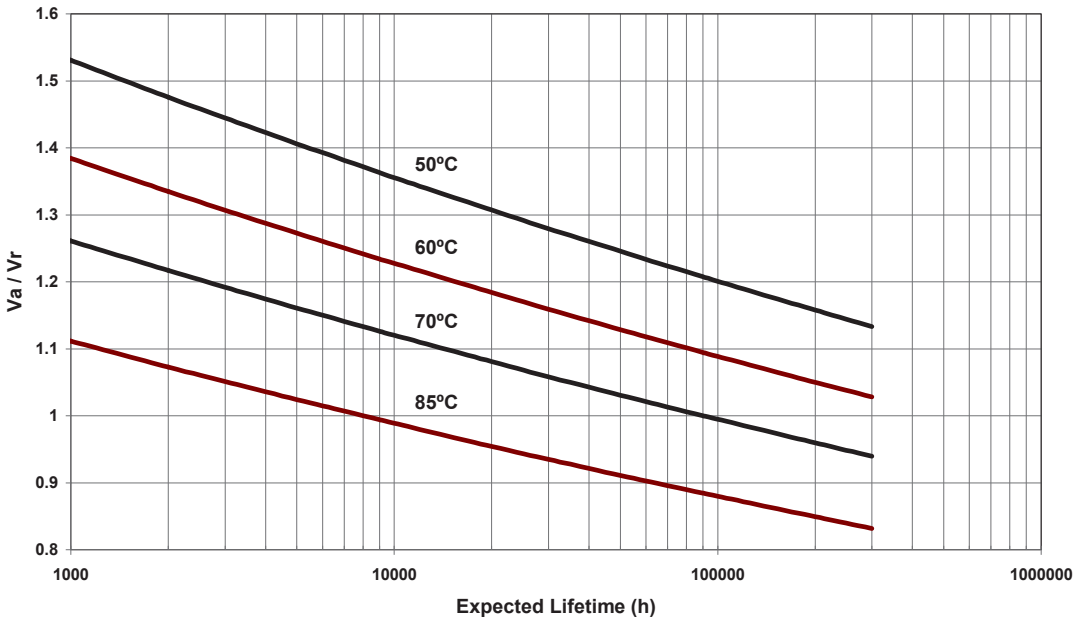

Notice and Disclaimer: All product drawings, descriptions, specifications, statements, information and data (collectively, the "Information") in this datasheet or other publication are subject to change. The customer is responsible for checking, confirming and verifying the extent to which the Information contained in this datasheet or other publication is applicable to an order at the time the order is placed. All Information given herein is believed to be accurate and reliable, but it is presented without any guarantee, warranty, representation or responsibility of any kind, expressed or implied. Statements of suitability for certain applications are based on the knowledge that the Cornell Dubilier company providing such statements ("Cornell Dubilier") has of operating conditions that such Cornell Dubilier company regards as typical for such applications, but are not intended to constitute any guarantee, warranty or representation regarding any such matter – and Cornell Dubilier specifically and expressly disclaims any guarantee, warranty or representation concerning the suitability for a specific customer application, use, storage, transportation, or operating environment. The Information is intended for use only by customers who have the requisite experience and capability to determine the correct products for their application. Any technical advice inferred from this Information or otherwise provided by Cornell Dubilier with reference to the use of any Cornell Dubilier products is given gratis (unless otherwise specified by Cornell Dubilier), and Cornell Dubilier assumes no obligation or liability for the advice given or results obtained. Although Cornell Dubilier strives to apply the most stringent quality and safety standards regarding the design and manufacturing of its products, in light of the current state of the art, isolated component failures may still occur. Accordingly, customer applications which require a high degree of reliability or safety should employ suitable designs or other safeguards (such as installation of protective circuitry or redundancies or other appropriate protective measures) in order to ensure that the failure of an electrical component does not result in a risk of personal injury or property damage. Although all product-related warnings, cautions and notes must be observed, the customer should not assume that all safety measures are indicated in such warnings, cautions and notes, or that other safety measures may not be required.

Type 944U Polypropylene, DC Link Capacitors

High Current, Low Profile for Inverter Applications

Type 944U is specifically designed for use in high power DC filtering applications. The low inductance internal construction utilizes low loss metallized polypropylene for high ripple current capability. Male or female terminal options offer design flexibility in a rugged UL 94VO rated flame retardant plastic case and resin fill. High current ratings and robust mounting flanges make the 944U suited for inverter applications in electric vehicle power inverters, wind power inverters and motor drives.

Highlights

- Low Inductance
- Low Profile
- Low ESR
- High Ripple Current
- High Voltage Ratings

Specifications

Capacitance Range	33 to 220 µF
Capacitance Tolerance	±10% standard
Rated Voltage	800 to 1400 Vdc
Operating Temperature Range	-40 °C to 85 °C
Maximum rms Current	74A @ 55 °C
Maximum rms Voltage	230 Vac
Test Voltage between Terminal @ 25°C	150% rated DC voltage for 10 s
Test Voltage between Terminals & Case @ 25°C	4 kVac @ 50/60 Hz for 60 s
Life Test	5000 h @ 85 °C, rated voltage
RoHS Compliant	

Dimensions

Construction Details	
Case Material	Plastic UL94V-0
Resin Material	Dry Resin UL94V-0
Terminal Material	Tin Plated Brass

UL Recognized E128034
construction only - unprotected

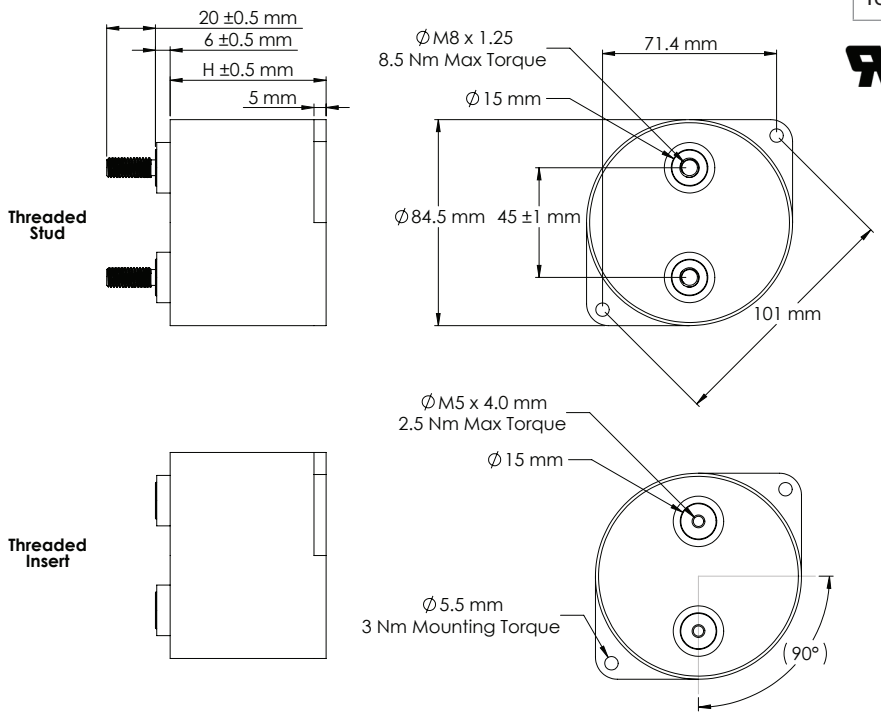

Type 944U Polypropylene, DC Link Capacitors

High Current, Low Profile for Inverter Applications

Part Numbering System

944U	101	K	801	A	A	M
Type	**Capacitance**	**Tolerance**	**Voltage**	**Diameter D (mm)**	**Height H (mm)**	**Terminal**
944U	101 = 100 µF	K = ±10%	801 = 800 Vdc	A = 84.5	A = 40	M = M8 Thd Stud
	700 = 70 µF		102 = 1000 Vdc		B = 51	I = M5 Thd Insert
	470 = 47 µF		122 = 1200 Vdc		C = 64	
			142 = 1400 Vdc			

Ratings

NOTE: Other ratings, sizes and performance specifications are available. Contact us.

Catalog Part Number	Cap (µF)	Rated Voltage (Vdc)	H Height mm	Typical ESR 10kHz (mΩ)	Typical ESL (nH)	Max Irms 55°C (A)	Thermal Resistance Θcc (°C/W)	Thermal Resistance Θca (°C/W)
944U101K801AA*	100	800	40	0.5	20	74	2.8	5.2
944U161K801AB*	160	800	51	0.8	30	73	3.0	4.5
944U221K801AC*	220	800	64	1.0	40	72	3.1	4.0
944U660K102AA*	66	1000	40	0.6	20	70	2.8	5.2
944U101K102AB*	100	1000	51	0.8	30	68	3.0	4.5
944U141K102AC*	140	1000	64	1.0	40	65	3.1	4.0
944U470K122AA*	47	1200	40	0.7	20	67	2.8	5.2
944U700K122AB*	70	1200	51	1.0	30	65	3.0	4.5
944U101K122AC*	100	1200	64	1.3	40	64	3.1	4.0
944U330K142AA*	33	1400	40	0.8	20	64	2.8	5.2
944U520K142AB*	52	1400	51	1.1	30	60	3.0	4.5
944U700K142AC*	70	1400	64	1.4	40	59	3.1	4.0

*** M = M8 Stud I = M5 Insert**

Typical Performance Curves

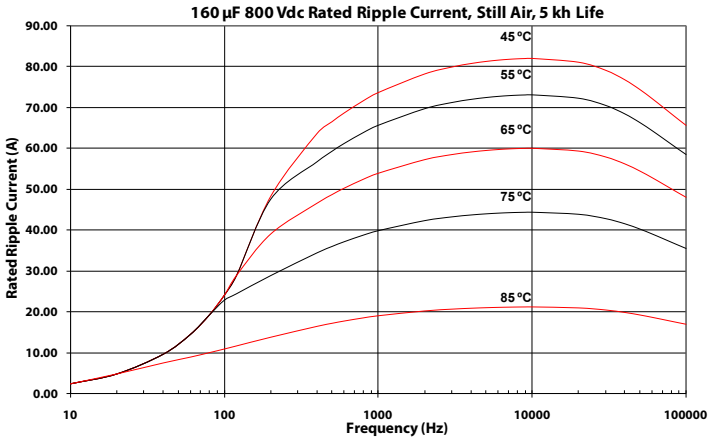

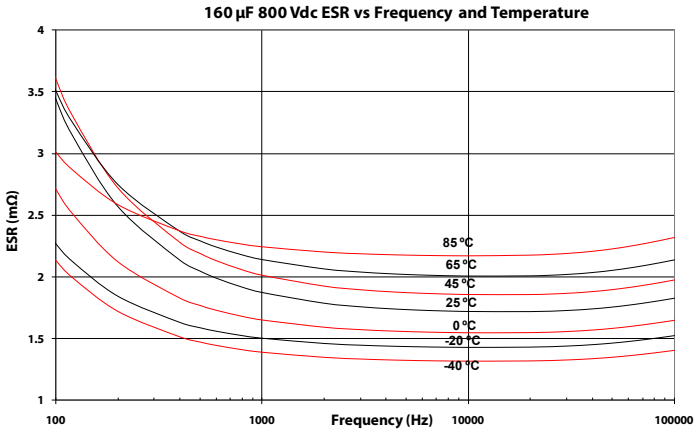

Expected Lifetime Predictions

Capacitance:	C (µF)
Equivalent Series Resistance:	ESR (mΩ)
Frequency:	f (kHz)
Ripple Current:	I (A_{rms})
Ambient Temperature:	T_A (°C)
Core Temperature:	T_C (°C)
Total Thermal Resistance:	Θ (°C/W)
Thermal Resistance case-to-ambient:	Θ_{CA} (°C/W)
Thermal Resistance core-to-case:	Θ_{CC} (°C/W)
Airflow Speed:	v (m/s)
Applied Voltage:	V_A (V_{DC})
Rated Voltage:	V_R (V_{DC})

Determine ESR at Operating Frequency

Use the 10 kHz ESR from the ratings tables.
For operation below 10 kHz, the ESR will need to be adjusted using the following equation: ESR - 31.83/(10C) + 31.83/(fC).

Determine Thermal Resistance at Operating Frequency and Air Flow

Compute $\Theta = \Theta_{CC} + \Theta_{CA}$. In the ratings tables, Θ_{CA} is for still air. For v = 0 to 5 m/s, multiply Θ_{CA} by $[(5 + 17.6(0.1^{0.66})) / (5 + 17.6(v + 0.1)^{0.66})]$

Determine Expected Lifetime

Look up Expected Lifetime on the graph using V_A/V_R and $T_C = T_A + I^2$ (ESR/1000) Θ

The maximum allowed temperature rise is 40 °C and the maximum allowed core temperature is 95 °C.

Expected Lifetime vs Hot Spot Temperature and Applied DC Voltage

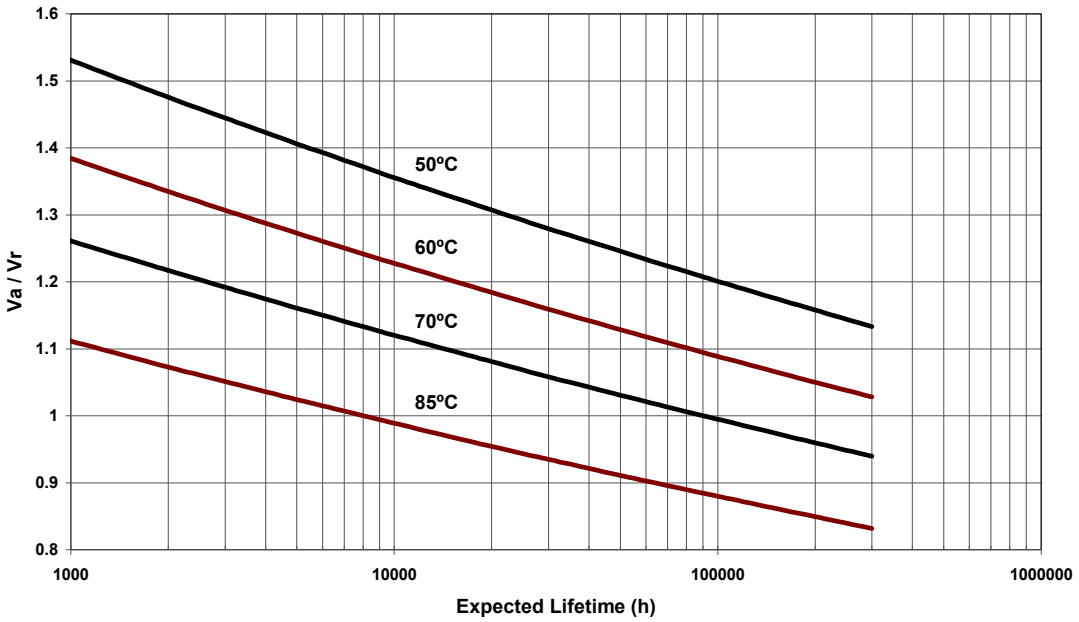

Notice and Disclaimer: All product drawings, descriptions, specifications, statements, information and data (collectively, the "Information") in this datasheet or other publication are subject to change. The customer is responsible for checking, confirming and verifying the extent to which the Information contained in this datasheet or other publication is applicable to an order at the time the order is placed. All Information given herein is believed to be accurate and reliable, but it is presented without any guarantee, warranty, representation or responsibility of any kind, expressed or implied. Statements of suitability for certain applications are based on the knowledge that the Cornell Dubilier company providing such statements ("Cornell Dubilier") has of operating conditions that such Cornell Dubilier company regards as typical for such applications, but are not intended to constitute any guarantee, warranty or representation regarding any such matter – and Cornell Dubilier specifically and expressly disclaims any guarantee, warranty or representation concerning the suitability for a specific customer application, use, storage, transportation, or operating environment. The Information is intended for use only by customers who have the requisite experience and capability to determine the correct products for their application. Any technical advice inferred from this Information or otherwise provided by Cornell Dubilier with reference to the use of any Cornell Dubilier products is given gratis (unless otherwise specified by Cornell Dubilier), and Cornell Dubilier assumes no obligation or liability for the advice given or results obtained. Although Cornell Dubilier strives to apply the most stringent quality and safety standards regarding the design and manufacturing of its products, in light of the current state of the art, isolated component failures may still occur. Accordingly, customer applications which require a high degree of reliability or safety should employ suitable designs or other safeguards (such as installation of protective circuitry or redundancies or other appropriate protective measures) in order to ensure that the failure of an electrical component does not result in a risk of personal injury or property damage. Although all product-related warnings, cautions and notes must be observed, the customer should not assume that all safety measures are indicated in such warnings, cautions and notes, or that other safety measures may not be required.

Type 947C Polypropylene, DC Link Capacitors

High Current, High Capacitance for Inverter Applications

Type 947C series uses the most advanced metallized film technology for long life, high reliability in DC Link applications. This series delivers high capacitance, high voltage and high ripple current handling capabilities required for inverters used in wind, solar, fuel cell applications and more.

Highlights

- Non-polar dielectric
- Dry, resin filled
- High reliability and life expectancy
- Replacement for aluminum electrolytic capacitors (lower capacitance, higher current)
- High current to 100 Amps
- Low ESR
- Low Inductance

Specifications

Capacitance Range	110 to 1500 µF
Capacitance Tolerance	±10% standard, ±5% optional
Rated Voltage	800 to 1300 Vdc
Operating Temperature Range	-40 ºC to 85 ºC (ambient)
Maximum rms Current	see data tables
Maximum rms Voltage	230 Vac
Test Voltage between Terminals @ 25 ºC	150% rated DC voltage for 10 s
Test Voltage between Terminals & Case @ 25 ºC	4 kVac @ 50/60 Hz for 60 s
Life Test	5000 h @ 85 ºC, rated voltage
Life Expectancy	200,000 h @ 60 ºC , rated voltage
Reliability	100 FIT typical (medium size capacitor)
Standards	IEC 61071, IEC 61881
RoHS Compliant	

Dimensions

Construction Details	
Case Material	Aluminum with Black PVC Sleeve
Resin Material	Dry Resin UL94V-0
Terminal Material	Tin Plated Brass

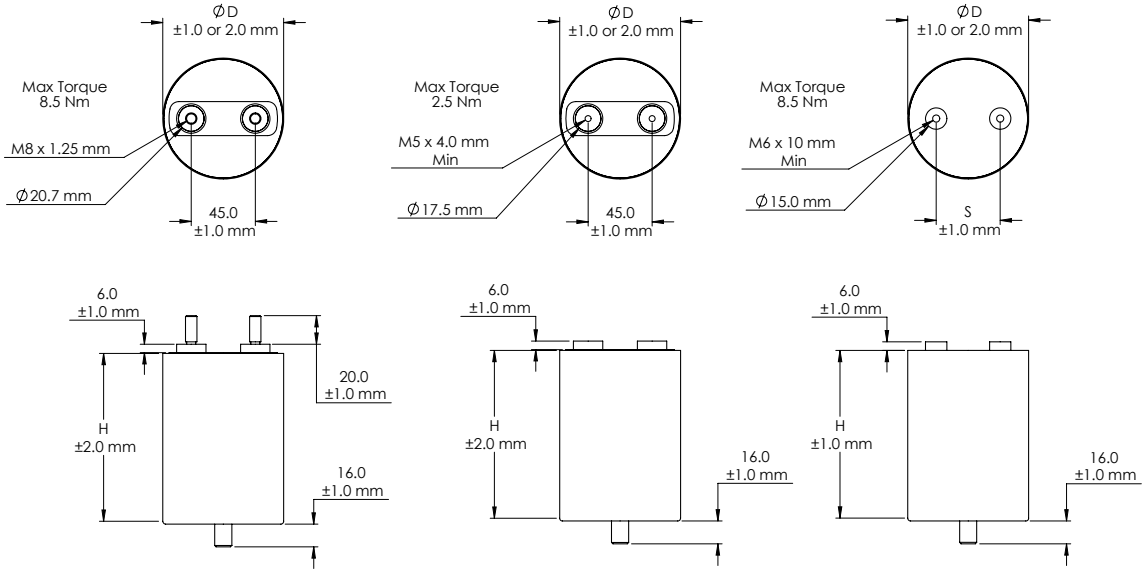

Figure 1 **Figure 2** **Figure 3**

All Shown with Optional M12 x 1.75 THD Stud

CDE Cornell Dubilier • 1605 E. Rodney French Blvd. • New Bedford, MA 02744 • Phone: (508)996-8561 • Fax: (508)996-3830

Type 947C Polypropylene, DC Link Capacitors

High Current, High Capacitance for Inverter Applications

Part Numbering System

947C	361	K	801	C	A	M	S	– NS
Type	**Capacitance**	**Tolerance**	**Voltage**	**Diameter D**	**Height H**	**Terminal**	**Mounting**	**Sleeving**
947C	**361** = 360 µF	**K** = ±10 %	**801** = 800 Vdc	**C =** 90 mm	**T** = 85 mm	**I** = M5 Insert	**blank** = no stud	Specify –NS
	731 = 730 µF	**J** = ±5 %	**901** = 900 Vdc	B = 85 mm	**A** = 97 mm	Threaded	**S** = M12 Stud	for Bare Can
	152 = 1500 µF		**102** = 1000 Vdc	D = 116 mm	**B** = 120 mm	**M** = M8 Stud	Threaded	
			112 = 1100 Vdc		**G** = 140 mm	Threaded		
			122 = 1200 Vdc		**C** = 145 mm	**H** = M6 Insert		
			132 = 1300 Vdc		**L** = 165 mm	Threaded		
					D = 170 mm			

Ratings

NOTE: Other ratings, sizes and performance specifications are available. Contact us.

Part Number	Cap. C (µF)	Rated Voltage Vr (Vdc)	Can Diameter D (mm)	Can Height H (mm)	Lead Spacing S (mm)	Case Area (mm^2)	Current ΔT = 40 Irms (A)	Typ ESR (mΩ)	Typ ESL (nH)	Thermal Resistance Θcc (°C/W)	Θca (°C/W)	Mass (kg)	Fig
947C311K801BTHS	310	800	85	85	31.7	34000	61	1.9	29	2.9	3.4	0.6	3
947C341K801CTMS	340	800	90	85	45.0	36800	66	1.7	29	2.8	3.1	0.7	1
947C341K801CTIS	340	800	90	85	45.0	36800	66	1.7	29	2.8	3.1	0.7	2
947C361K801CAMS	360	800	90	97	45.0	40100	65	1.9	33	3.0	2.9	0.9	1
947C361K801CAIS	360	800	90	97	45.0	40100	65	1.9	33	3.0	2.9	0.9	2
947C381K801BAHS	380	800	85	97	31.7	37300	61	2.0	33	2.7	3.1	0.7	3
947C411K801CAMS	410	800	90	97	45.0	40100	65	1.9	33	2.7	2.9	0.7	1
947C411K801CAIS	410	800	90	97	45.0	40100	65	1.9	33	2.7	2.9	0.7	2
947C491K801CBMS	490	800	90	120	45.0	46700	59	2.6	41	2.6	2.5	1.0	1
947C491K801CBIS	490	800	90	120	45.0	46700	59	2.6	41	2.6	2.5	1.0	2
947C511K801BBHS	510	800	85	120	31.7	43400	59	2.5	41	2.3	2.6	0.8	3
947C561K801CBMS	560	800	90	120	45.0	46700	64	2.3	41	2.3	2.5	0.9	1
947C561K801CBIS	560	800	90	120	45.0	46700	64	2.3	41	2.3	2.5	0.9	2
947C601K801CCMS	600	800	90	145	45.0	53700	58	3.1	49	2.2	2.1	1.2	1
947C601K801CCIS	600	800	90	145	45.0	53700	58	3.1	49	2.2	2.1	1.2	2
947C621K801DTHS	620	800	116	85	50.0	52100	103	1.0	35	2.1	2.2	1.1	3
947C651K801BGHS	650	800	85	140	31.7	48700	59	2.9	49	2.0	2.4	0.9	3
947C701K801CCMS	700	800	90	145	45.0	53700	63	2.7	49	2.0	2.1	1.1	1
947C701K801CCIS	700	800	90	145	45.0	53700	63	2.7	49	2.0	2.1	1.1	2
947C731K801CDMS	730	800	90	170	45.0	60800	58	3.5	58	1.9	1.9	1.3	1
947C731K801CDIS	730	800	90	170	45.0	60800	58	3.5	58	1.9	1.9	1.3	2
947C751K801DAHS	750	800	116	97	50.0	56500	101	1.1	40	2.1	2	1.2	3
947C791K801BDHS	790	800	85	170	31.7	56700	59	3.3	58	1.7	2	1.1	3
947C851K801CDMS	850	800	90	170	45.0	60800	63	3.0	58	1.7	1.9	1.2	1
947C851K801CDIS	850	800	90	170	45.0	60800	63	3.0	58	1.7	1.9	1.2	2
947C102K801DBHS	1000	800	116	120	50.0	64900	97	1.3	50	2.0	1.8	1.4	3
947C122K801DCHS	1200	800	116	145	50.0	74000	92	1.6	60	1.9	1.6	1.7	3
947C152K801DLHS	1500	800	116	165	50.0	81300	93	1.8	70	1.7	1.4	1.9	3
947C241K901BTHS	240	900	85	85	31.7	34000	57	2.1	29	2.9	3.4	0.6	3

Type 947C Polypropylene, DC Link Capacitors

High Current, High Capacitance for Inverter Applications

Part Number	Cap. C (µF)	Rated Voltage Vr (Vdc)	Can Diameter D (mm)	Can Height H (mm)	Lead Spacing S (mm)	Case Area (mm^2)	Current ΔT = 40 Irms (A)	Typ ESR (mΩ)	Typ ESL (nH)	Thermal Resistance Θcc (°C/W)	Θca (°C/W)	Mass (kg)	Fig
947C261K901CTMS	260	900	90	85	45.0	36800	61	2.0	29	2.9	3.1	0.7	1
947C261K901CTIS	260	900	90	85	45.0	36800	61	2.0	29	2.9	3.1	0.7	2
947C291K901BAHS	290	900	85	97	31.7	37300	56	2.3	33	2.7	3.1	0.7	3
947C321K901CAMS	320	900	90	97	45.0	40100	61	2.1	33	2.7	2.9	0.7	1
947C321K901CAIS	320	900	90	97	45.0	40100	61	2.1	33	2.7	2.9	0.7	2
947C401K901BBHS	400	900	85	120	31.7	43400	56	2.8	41	2.3	2.6	0.8	3
947C431K901CBMS	430	900	90	120	45.0	46700	59	2.6	41	2.3	2.5	0.9	1
947C431K901CBIS	430	900	90	120	45.0	46700	59	2.6	41	2.3	2.5	0.9	2
947C481K901DTHS	480	900	116	85	50.0	52100	96	1.1	35	2.1	2.2	1.1	3
947C511K901BGHS	510	900	85	140	31.7	48700	56	3.2	49	2.0	2.4	0.9	3
947C551K901CCMS	550	900	90	145	45.0	53700	59	3.0	49	2.0	2.1	1.0	1
947C551K901CCIS	550	900	90	145	45.0	53700	59	3.0	49	2.0	2.1	1.0	2
947C581K901DAHS	580	900	116	97	50.0	56500	94	1.3	35	2.1	2	1.2	3
947C611K901BDHS	610	900	85	170	31.7	56700	56	3.7	58	1.7	2	1.1	3
947C661K901CDMS	660	900	90	170	45.0	60800	59	3.4	58	1.8	1.9	1.2	1
947C661K901CDIS	660	900	90	170	45.0	60800	59	3.4	58	1.8	1.9	1.2	2
947C791K901DBHS	790	900	116	120	50.0	64900	91	1.5	50	2.0	1.8	1.4	3
947C102K901DCHS	1000	900	116	145	50.0	74000	89	1.7	60	1.8	1.6	1.7	3
947C122K901DLHS	1200	900	116	165	50.0	81300	89	2.0	70	1.6	1.4	1.9	3
947C191K102BTHS	190	1000	85	85	31.7	34000	53	2.4	29	2.9	3.4	0.6	3
947C211K102CTMS	210	1000	90	85	45.0	36800	58	2.2	29	2.9	3.1	0.7	1
947C211K102CTIS	210	1000	90	85	45.0	36800	58	2.2	29	2.9	3.1	0.7	2
947C231K102CAMS	230	1000	90	97	45.0	40100	54	2.6	33	3.0	2.9	0.9	1
947C231K102CAIS	230	1000	90	97	45.0	40100	54	2.6	33	3.0	2.9	0.9	2
947C241K102BAHS	240	1000	85	97	31.7	37300	54	2.5	33	2.7	3.1	0.7	3
947C251K102CAMS	250	1000	90	97	45.0	40100	56	2.4	33	2.7	2.9	0.8	1
947C251K102CAIS	250	1000	90	97	45.0	40100	56	2.4	33	2.7	2.9	0.8	2
947C311K102CBMS	310	1000	90	120	45.0	46700	53	3.2	41	2.6	2.5	1.0	1
947C311K102CBIS	310	1000	90	120	45.0	46700	53	3.2	41	2.6	2.5	1.0	2
947C321K102BBHS	320	1000	85	120	31.7	43400	53	3.1	41	2.3	2.6	0.8	3
947C351K102CBMS	350	1000	90	120	45.0	46700	57	2.8	41	2.3	2.5	0.9	1
947C351K102CBIS	350	1000	90	120	45.0	46700	57	2.8	41	2.3	2.5	0.9	2
947C381K102DTHS	380	1000	116	85	50.0	52100	90	1.3	35	2.2	2.2	1.1	3
947C391K102CCMS	390	1000	90	145	45.0	53700	53	3.7	49	2.2	2.1	1.2	1
947C391K102CCIS	390	1000	90	145	45.0	53700	53	3.7	49	2.2	2.1	1.2	2
947C411K102BGHS	410	1000	85	140	31.7	48700	53	3.5	49	2.0	2.4	0.9	3
947C441K102CCMS	440	1000	90	145	45.0	53700	56	3.3	49	2.0	2.1	1.1	1
947C441K102CCIS	440	1000	90	145	45.0	53700	56	3.3	49	2.0	2.1	1.1	2
947C471K102DAHS	470	1000	116	97	50.0	56500	90	1.4	40	2.1	2	1.2	3
947C471K102CDMS	470	1000	90	170	45.0	60800	52	4.3	38	1.9	1.9	1.3	1
947C471K102CDIS	470	1000	90	170	45.0	60800	52	4.3	38	1.9	1.9	1.3	2
947C491K102BDHS	490	1000	85	170	31.7	56700	53	4.1	49	1.7	2	1.1	3

Type 947C Polypropylene, DC Link Capacitors

High Current, High Capacitance for Inverter Applications

Part Number	Cap. C (µF)	Rated Voltage Vr (Vdc)	Can Diameter D (mm)	Can Height H (mm)	Lead Spacing S (mm)	Case Area (mm^2)	Current ΔT = 40 Irms (A)	Typ ESR (mΩ)	Typ ESL (nH)	Thermal Resistance Θcc (°C/W)	Θca (°C/W)	Mass (kg)	Fig
947C531K102CDMS	530	1000	90	170	45.0	60800	56	3.8	58	1.8	1.9	1.2	1
947C531K102CDIS	530	1000	90	170	45.0	60800	56	3.8	58	1.8	1.9	1.2	2
947C641K102DBHS	640	1000	116	120	50.0	64900	87	1.6	50	2.0	1.8	1.4	3
947C801K102DCHS	800	1000	116	145	50.0	74000	85	1.9	60	1.8	1.6	1.7	3
947C971K102DLHS	970	1000	116	165	50.0	81300	84	2.2	70	1.6	1.4	1.9	3
947C161K112BTHS	160	1100	85	85	31.7	34000	51	2.6	29	2.9	3.4	0.6	3
947C171K112CTMS	170	1100	90	85	45.0	36800	54	2.4	29	2.9	3.1	0.7	1
947C171K112CTIS	170	1100	90	85	45.0	36800	54	2.4	29	2.9	3.1	0.7	2
947C191K112BAHS	190	1100	85	97	31.7	37300	50	2.9	33	2.7	3.1	0.7	3
947C211K112CAMS	210	1100	90	97	45.0	40100	54	2.6	33	2.7	2.9	0.8	1
947C211K112CAIS	210	1100	90	97	45.0	40100	54	2.6	33	2.7	2.9	0.8	2
947C261K112BBHS	260	1100	85	120	31.7	43400	50	3.4	41	2.3	2.6	0.8	3
947C281K112CBMS	280	1100	90	120	45.0	46700	53	3.2	41	2.3	2.5	0.9	1
947C281K112CBIS	280	1100	90	120	45.0	46700	53	3.2	41	2.3	2.5	0.9	2
947C311K112DTHS	310	1100	116	85	50.0	52100	85	1.4	35	2.2	2.2	1.1	3
947C331K112BCHS	330	1100	85	145	31.7	50100	50	4.0	49	2.0	2.3	0.9	3
947C361K112CCMS	360	1100	90	145	45.0	53700	53	3.7	49	2.0	2.1	1.1	1
947C361K112CCIS	360	1100	90	145	45.0	53700	53	3.7	49	2.0	2.1	1.1	2
947C381K112DAHS	380	1100	116	97	50.0	56500	84	1.5	40	2.2	2	1.2	3
947C401K112BDHS	400	1100	85	170	31.7	56700	50	4.5	58	1.7	2	1.1	3
947C431K112CDMS	430	1100	90	170	45.0	60800	53	4.2	58	1.8	1.9	1.2	1
947C431K112CDIS	430	1100	90	170	45.0	60800	53	4.2	58	1.8	1.9	1.2	2
947C521K112DBHS	520	1100	116	120	50.0	64900	82	1.8	50	2.0	1.8	1.4	3
947C661K112DCHS	660	1100	116	145	50.0	74000	81	2.1	60	1.8	1.6	1.7	3
947C801K112DLHS	800	1100	116	165	50.0	81300	81	2.4	70	1.6	1.4	1.9	3
947C131K122BTHS	130	1200	85	85	31.7	34000	48	2.9	29	2.9	3.4	0.6	3
947C141K122CTIS	140	1200	90	85	45.0	36800	51	2.7	29	2.9	3.1	0.7	1
947C141K122CTIS	140	1200	90	85	45.0	36800	51	2.7	29	2.9	3.1	0.7	2
947C161K122BAHS	160	1200	85	97	31.7	37300	48	3.1	33	2.7	3.1	0.7	3
947C161K122CAMS	160	1200	90	97	45.0	40100	49	3.1	33	3.0	2.9	0.9	1
947C161K122CAIS	160	1200	90	97	45.0	40100	49	3.1	33	3.0	2.9	0.9	2
947C171K122CAMS	170	1200	90	97	45.0	40100	51	3.0	33	2.8	2.9	0.8	1
947C171K122CAIS	170	1200	90	97	45.0	40100	51	3.0	33	2.8	2.9	0.8	2
947C211K122CBMS	210	1200	90	120	45.0	46700	48	3.9	41	2.6	2.5	1.0	1
947C211K122CBIS	210	1200	90	120	45.0	46700	48	3.9	41	2.6	2.5	1.0	2
947C221K122BBHS	220	1200	85	120	31.7	43400	48	3.7	41	2.3	2.6	0.8	3
947C241K122CBMS	240	1200	90	120	45.0	46700	51	4.0	49	2.3	2.5	0.9	1
947C241K122CBIS	240	1200	90	120	45.0	46700	51	4.0	49	2.3	2.5	0.9	2
947C261K122DTHS	260	1200	116	85	50.0	52100	82	1.5	35	2.2	2.2	1.1	3
947C271K122CCMS	270	1200	90	145	45.0	53700	48	4.4	49	2.2	2.1	1.2	1
947C271K122CCIS	270	1200	90	145	45.0	53700	48	4.4	49	2.2	2.1	1.2	2
947C281K122BGHS	280	1200	85	140	31.7	48700	48	4.3	49	2.0	2.4	0.9	3

Type 947C Polypropylene, DC Link Capacitors

High Current, High Capacitance for Inverter Applications

Part Number	Cap. C (µF)	Rated Voltage Vr (Vdc)	Can Diameter D (mm)	Can Height H (mm)	Lead Spacing S (mm)	Case Area (mm^2)	Current ΔT = 40 Irms (A)	Typ ESR (mΩ)	Typ ESL (nH)	Thermal Resistance Θcc (°C/W)	Θca (°C/W)	Mass (kg)	Fig
947C301K122CCMS	300	1200	90	145	45.0	53700	51	4.0	49	2.0	2.1	1.1	1
947C301K122CCIS	300	1200	90	145	45.0	53700	51	4.0	49	2.0	2.1	1.1	2
947C321K122DAHS	320	1200	116	97	50.0	56500	81	1.7	40	2.1	2	1.2	3
947C321K122CDMS	320	1200	90	170	45.0	60800	47	5.1	58	1.9	1.9	1.3	1
947C321K122CDIS	320	1200	90	170	45.0	60800	47	5.1	58	1.9	1.9	1.3	2
947C331K122BDHS	330	1200	85	170	31.7	56700	47	5.0	58	1.7	2	1.1	3
947C361K122CDMS	360	1200	90	170	45.0	60800	51	4.6	58	1.8	1.9	1.2	1
947C361K122CDIS	360	1200	90	170	45.0	60800	51	4.6	58	1.8	1.9	1.2	2
947C431K122DBHS	430	1200	116	120	50.0	64900	78	2.0	50	2.0	1.8	1.4	3
947C551K122DCHS	550	1200	116	145	50.0	74000	78	2.3	60	1.8	1.6	1.7	3
947C661K122DLHS	660	1200	116	165	50.0	81300	76	2.6	70	1.6	1.4	1.9	3
947C111K132BTHS	110	1300	85	85	31.7	34000	46	3.2	29	2.9	3.4	0.6	3
947C121K132CTMS	120	1300	90	85	45.0	36800	49	2.9	29	2.9	3.1	0.7	1
947C121K132CTIS	120	1300	90	85	45.0	36800	49	2.9	29	2.9	3.1	0.7	2
947C131K132BAHS	130	1300	85	97	31.7	37300	45	3.6	33	2.8	3.1	0.7	3
947C151K132CAMS	150	1300	90	97	45.0	40100	50	3.1	33	2.7	2.9	0.7	1
947C151K132CAIS	150	1300	90	97	45.0	40100	50	3.1	33	2.7	2.9	0.7	2
947C181K132BBHS	180	1300	85	120	31.7	43400	45	4.1	41	2.3	2.6	0.8	3
947C201K132CBMS	200	1300	90	120	45.0	46700	49	3.8	41	2.3	2.5	0.9	1
947C201K132CBIS	200	1300	90	120	45.0	46700	49	3.8	41	2.3	2.5	0.9	2
947C221K132DTHS	220	1300	116	85	50.0	52100	78	1.7	35	2.2	2.2	1.1	3
947C231K132BGHS	230	1300	85	140	31.7	48700	45	4.8	49	2.0	2.4	0.9	3
947C251K132CCMS	250	1300	90	145	45.0	53700	48	4.4	49	2.0	2.1	1.1	1
947C251K132CCIS	250	1300	90	145	45.0	53700	48	4.4	49	2.0	2.1	1.1	2
947C271K132DAHS	270	1300	116	97	50.0	56500	77	1.8	40	2.1	2	1.2	3
947C281K132BDHS	280	1300	85	170	31.7	56700	45	5.4	49	1.7	2	1.1	3
947C311K132CDMS	310	1300	90	170	45.0	60800	49	4.9	58	1.7	1.9	1.2	1
947C311K132CDIS	310	1300	90	170	45.0	60800	49	4.9	58	1.7	1.9	1.2	2
947C371K132DBHS	370	1300	116	120	50.0	64900	76	2.1	50	2.0	1.8	1.4	3
947C461K132DCHS	460	1300	116	145	50.0	74000	74	2.5	60	1.8	1.6	1.7	3
947C561K132DLHS	560	1300	116	165	50.0	81300	73	2.8	70	1.6	1.4	1.9	3

1. Rated Current is for temperature rise of +40 °C at 1–20 kHz.
2. θcc is core-to-case thermal resistance at 0–10 kHz. For higher frequency see Expected Lifetime Predictions.
3. θca is case-to-ambient thermal resistance for still air. For moving air see Expected Lifetime Predictions.

Expected Lifetime Predictions

To use the Expected Lifetime curves calculate Va/Vr and core temperature T. Start by estimating:

- Applied dc voltage Va
- Ripple Current I
- Ripple Frequency f
- Ambient Temperature Ta
- Airflow speed v

Units:

$A=m^2$	T, Ta & Tc=°C
C=µF	θ, θca & θcc =°C/W
ESR=mΩ	v=m/s
f=kHz	Va &Vr=Vdc
I=A	

NOTE: The temperature rise in the 947C is I^2(ESR) times the thermal resistance θ. The ESR is mainly the metal resistance; the metal resistance is the 10 kHz ESR. The dielectric resistance needs to be considered for operation below 10kHz.

1. Start with the 10kHz ESR from the ratings table. If frequency is less than 10kHz, use the following equation: ESR - 31.83/(10C) + 31.83/(fC).

2. Compute total thermal resistance θ as the sum of core-to-case thermal resistance θcc and case-to-ambient thermal resistance θca. Both are in the Ratings table but θca is for still air. For moving air use the capacitor surface area A and airflow speed v to calculate θca = 1/[A(5+17(v+0.1)0.66)].

Please note that the θcc for all designs built to figures 1 and 2; θcc is for 10 kHz or less. For frequency > 10 kHz multiply θcc by [1+(f –10)/100], e.g., for 75 kHz multiply θcc by 1.65.

3. Compute Va/Vr and the core temperature T.
$T = Ta + I^2(ESR)\theta$

4. Look up estimated lifetime from the Expected Lifetime curves.

5. If you want a longer expected lifetime, choose a capacitor with higher voltage rating or consider using multiple capacitors in

The expected lifetime predictions assume no exposure to overvoltage transients.
Expected lifetime can be calculated for varying exposure to overvoltage transients.
As an illustration at 50 °C the expected lifetime is 100,000 h with the 24-hour Va / Vr profile below:

Va / Vr	Duration
1.67	100 ms
1.50	5 minutes
1.30	2.5 hours
1.10	9.6 hours
1.00	11.9 hours

For applications with more severe 24-hour profiles, contact us.

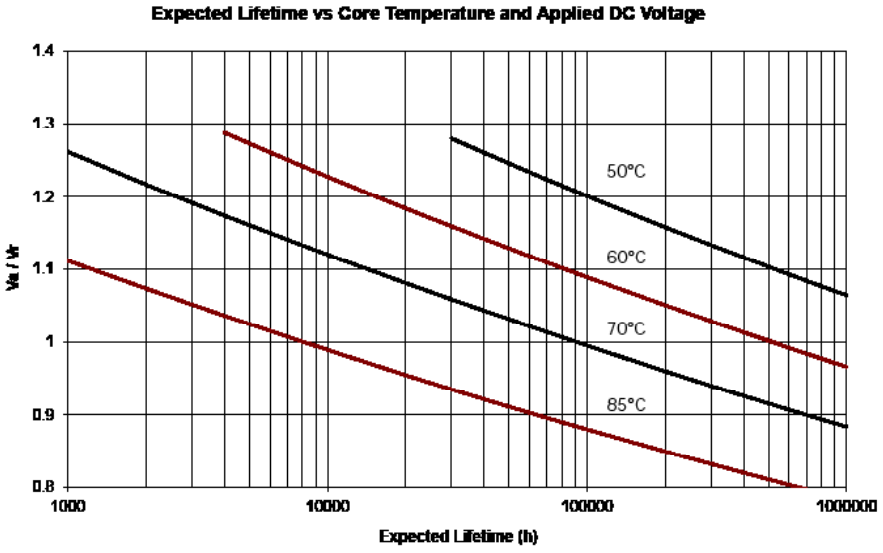

Type 947C Polypropylene, DC Link Capacitors

High Current, High Capacitance for Inverter Applications

Typical Performance Curves

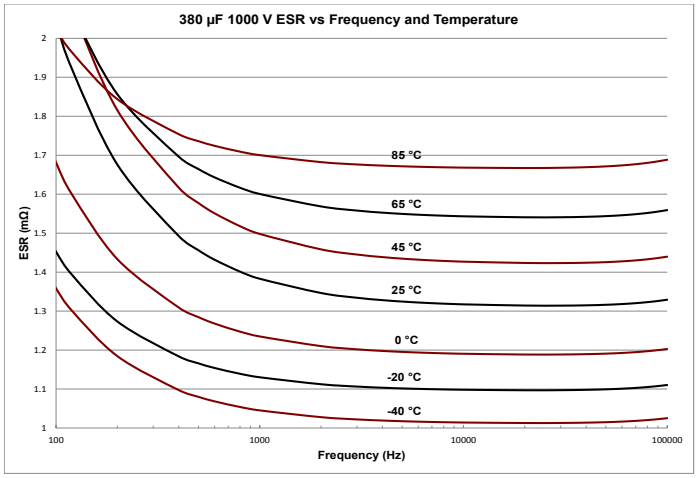

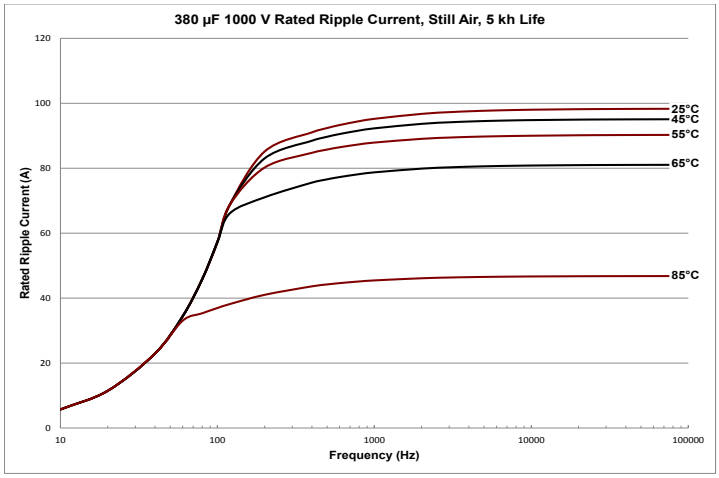

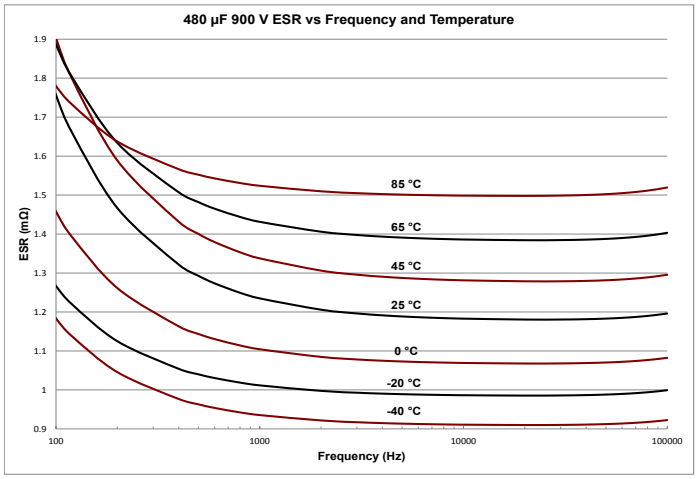

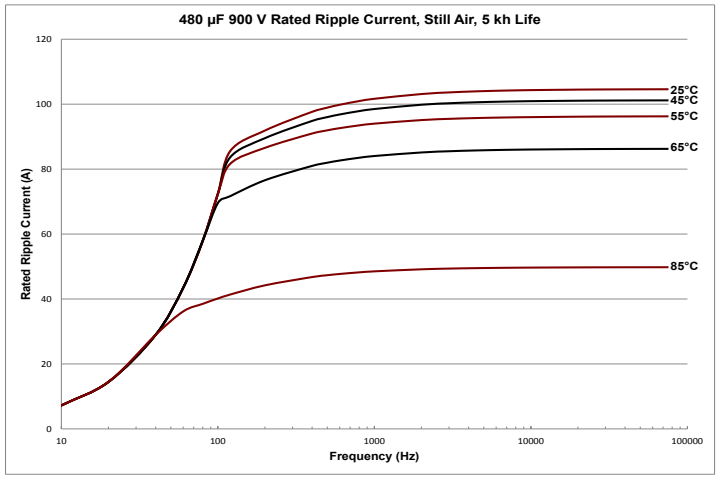

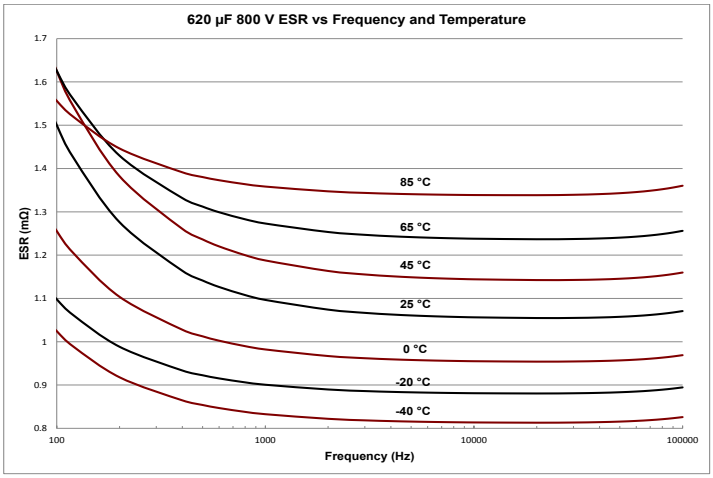

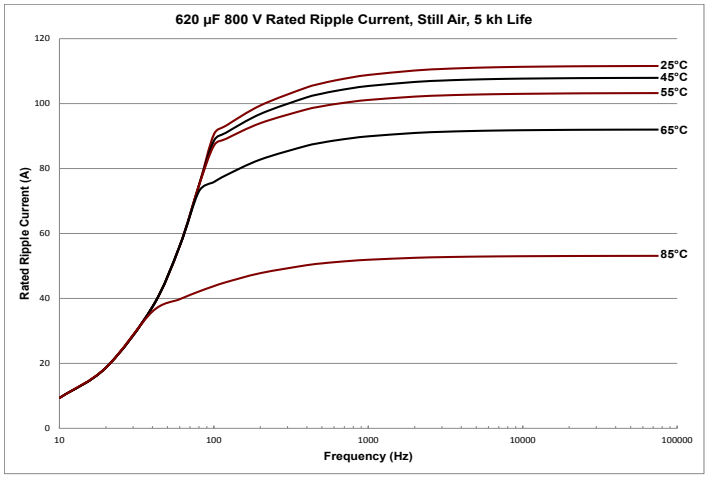

Notice and Disclaimer: All product drawings, descriptions, specifications, statements, information and data (collectively, the "Information") in this datasheet or other publication are subject to change. The customer is responsible for checking, confirming and verifying the extent to which the Information contained in this datasheet or other publication is applicable to an order at the time the order is placed. All Information given herein is believed to be accurate and reliable, but it is presented without any guarantee, warranty, representation or responsibility of any kind, expressed or implied. Statements of suitability for certain applications are based on the knowledge that the Cornell Dubilier company providing such statements ("Cornell Dubilier") has of operating conditions that such Cornell Dubilier company regards as typical for such applications, but are not intended to constitute any guarantee, warranty or representation regarding any such matter – and Cornell Dubilier specifically and expressly disclaims any guarantee, warranty or representation concerning the suitability for a specific customer application, use, storage, transportation, or operating environment. The Information is intended for use only by customers who have the requisite experience and capability to determine the correct products for their application. Any technical advice inferred from this Information or otherwise provided by Cornell Dubilier with reference to the use of any Cornell Dubilier products is given gratis (unless otherwise specified by Cornell Dubilier), and Cornell Dubilier assumes no obligation or liability for the advice given or results obtained. Although Cornell Dubilier strives to apply the most stringent quality and safety standards regarding the design and manufacturing of its products, in light of the current state of the art, isolated component failures may still occur. Accordingly, customer applications which require a high degree of reliability or safety should employ suitable designs or other safeguards (such as installation of protective circuitry or redundancies or other appropriate protective measures) in order to ensure that the failure of an electrical component does not result in a risk of personal injury or property damage. Although all product-related warnings, cautions and notes must be observed, the customer should not assume that all safety measures are indicated in such warnings, cautions and notes, or that other safety measures may not be required.

Type 947D Polypropylene, High Energy Density, DC Link Capacitors

High Current, High Capacitance for Inverter Applications

Type 947D series uses the most advanced metallized film technology for long life and high reliability in DC Link applications. This series combines high capacitance and very high ripple current capability needed for today's inverter designs for wind, solar, fuel cells, UPS systems and more.

Specifications

Capacitance Range	130 to 1500 µF
Capacitance Tolerance	±10% standard
Rated Voltage	900 to 1300 Vdc
Operating Temperature Range	-45 °C to 85 °C (ambient)
Maximum rms Current	see data tables
Maximum rms Voltage	230 Vac
Test Voltage between Terminals @ 25 °C	150% rated DC voltage for 10 s
Test Voltage between Terminals and Case @ 25°C	4 kVac @ 50/60 Hz for 10 s
Life Test	7000 h @ 85 °C, rated voltage
Life Expectancy	350,000 h @ 60 °C Core, rated voltage
RoHS Compliant	

Dimensions

Construction Details	
Case Material	Aluminum Can
Resin Material	Dry Resin UL94V-0
Terminal Material	Tin Plated Brass
Insulator Cap Material	Polypropylene UL94V-0

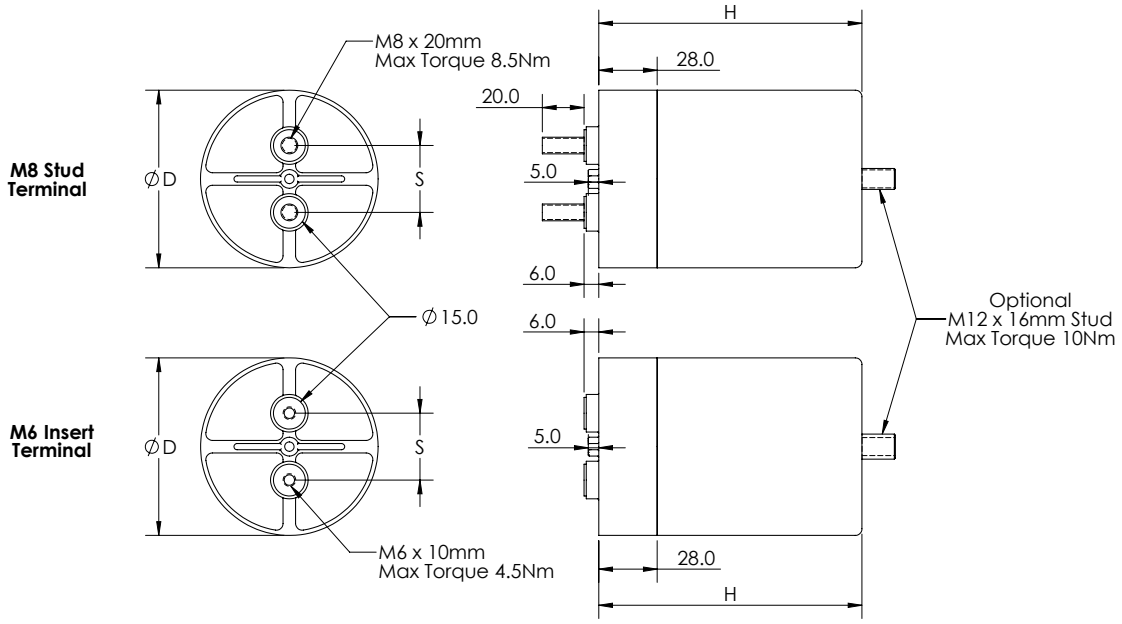

All dimensions have a ±1 mm tolerance
Consult factory for mounting options

Type 947D Polypropylene, High Energy Density, DC Link Capacitors

High Current, High Capacitance for Inverter Applications

Part Numbering System

947D	391	K	112	C	E	R	S	N
Type	Capacitance	Tolerance	Voltage	Diameter ±1mm	Height ±1mm	Terminal	Mounting	Sleeve
947D	**391** = 390 µF **152** = 1500 µF	**K** = ±10%	**901** = 900 Vdc **102** = 1000 Vdc **112** = 1100 Vdc **122** = 1200 Vdc **132** = 1300 Vdc	**A** = 85 mm **B** = 90 mm **C** = 100 mm **D** = 116 mm	**C** = 75 mm **D** = 87 mm **E** = 100 mm **F** = 112 mm **G** = 126 mm **H** = 136 mm **J** = 150 mm **L** = 162 mm	**G** = M6 Insert (32 mm) **N** = M8 Stud (32 mm) **J** = M8 Stud (45 mm) **M** = M6 Insert (45 mm) **P** = M8 Stud (50 mm) **R** = M6 Insert (50 mm)	**F** = Flat Base **S** = Stud Base	**N** = No Sleeve **S** = Black PVC

Ratings

		Rated	Can	Can	Lead		Current			Thermal		
	Cap	Voltage	Diameter	Height	Spacing	Case	T_A=55 °C	Typ	Typ	Resistance		Max
	C	V_R	D	H	S	Area	Irms	ESR	ESL	Θcc	Θca	Mass
PartNumber	(µF)	(V_{DC})	(mm)	(mm)	(mm)	(mm²)	(A)	(mΩ)	(nH)	(°C/W)	(°C/W)	(kg)
947D311K901ACGSN	310	900	85	75	32	31400	67	1.4	30	1.4	3.8	0.5
947D351K901BCMSN	350	900	90	75	45	33900	73	1.2	30	1.3	3.5	0.6
947D371K901ADGSN	370	900	85	87	32	34600	66	1.5	34	1.3	3.5	0.6
947D421K901BDMSN	420	900	90	87	45	37300	75	1.2	33	1.3	3.2	0.6
947D441K901AEGSN	440	900	85	100	32	38100	65	1.7	38	1.2	3.2	0.6
947D441K901CCRSN	440	900	100	75	50	39300	85	1.0	30	1.1	3.1	0.7
947D501K901BEMSN	500	900	90	100	45	41000	74	1.3	37	1.3	2.9	0.7
947D511K901AFGSN	510	900	85	112	32	41300	64	1.9	42	1.2	2.9	0.7
947D541K901CDRSN	540	900	100	87	50	43000	83	1.2	34	1.1	2.8	0.8
947D571K901AGGSN	570	900	85	126	32	45000	63	2.1	46	1.1	2.7	0.8
947D581K901BFMSN	580	900	90	112	45	44400	72	1.5	41	1.3	2.7	0.8
947D601K901DCRSN	600	900	116	75	50	48500	102	0.9	35	0.8	2.5	0.9
947D631K901CERSN	630	900	100	100	50	47100	82	1.3	38	1.0	2.5	0.9
947D641K901AHGSN	640	900	85	136	32	47700	62	2.3	50	1.1	2.5	0.8
947D651K901BGMSN	650	900	90	126	45	48300	71	1.6	45	1.2	2.5	0.9
947D711K901AJGSN	710	900	85	150	32	51400	62	2.5	54	1.1	2.3	0.9
947D731K901BHMSN	730	900	90	136	45	51200	69	1.8	49	1.2	2.3	0.9
947D731K901CFRSN	730	900	100	112	50	50900	81	1.4	42	1.0	2.4	1.0
947D731K901DDRSN	730	900	116	87	50	52800	101	1.0	40	0.8	2.3	1.1
947D781K901ALGSN	780	900	85	162	32	54600	61	2.7	59	1.0	2.2	1.0
947D811K901BJMSN	810	900	90	150	45	55100	68	1.9	53	1.2	2.2	1.0
947D821K901CGRSN	820	900	100	126	50	55300	80	1.6	46	1.0	2.2	1.1
947D861K901DERSN	860	900	116	100	50	57600	100	1.1	45	0.8	2.1	1.2
947D881K901BLMSN	880	900	90	162	45	58500	67	2.1	58	1.2	2.1	1.1
947D921K901CHRSN	920	900	100	136	50	58400	79	1.7	50	1.0	2.1	1.2
947D991K901DFRSN	990	900	116	112	50	62000	99	1.2	50	0.8	1.9	1.3
947D102K901CJRSN	1000	900	100	150	50	62800	78	1.9	54	0.9	1.9	1.3
947D112K901CLRSN	1100	900	100	162	50	66600	77	2.0	59	0.9	1.8	1.4
947D112K901DGRSN	1100	900	116	126	50	67100	98	1.3	55	0.8	1.8	1.5
947D122K901DHRSN	1200	900	116	136	50	70700	96	1.4	60	0.8	1.7	1.6
947D132K901DJRSN	1300	900	116	150	50	75800	95	1.5	65	0.8	1.6	1.7
947D152K901DLRSN	1500	900	116	162	50	80200	94	1.6	70	0.7	1.5	1.8
947D241K102ACGSN	240	1000	85	75	32	31400	63	1.5	30	1.4	3.8	0.5

Type 947D Polypropylene, High Energy Density, DC Link Capacitors

High Current, High Capacitance for Inverter Applications

PartNumber	Cap C (µF)	Rated Voltage V_R (V_{DC})	Can Dia D (mm)	Can Height H (mm)	Lead Spacing S (mm)	Case Area (mm²)	Current T_A=55 °C Irms (A)	Typ ESR (mΩ)	Typ ESL (nH)	Thermal Resistance Θcc (°C/W)	Θca (°C/W)	Max Mass (kg)
947D271K102BCMSN	270	1000	90	75	45	33900	69	1.3	30	1.3	3.5	0.6
947D291K102ADGSN	290	1000	85	87	32	34600	62	1.7	34	1.4	3.5	0.6
947D331K102BDMSN	330	1000	90	87	45	37300	71	1.3	33	1.3	3.2	0.6
947D341K102AEGSN	340	1000	85	100	32	38100	61	1.9	38	1.3	3.2	0.6
947D341K102CCRSN	340	1000	100	75	50	39300	81	1.1	30	1.2	3.1	0.7
947D391K102BEMSN	390	1000	90	100	45	41000	70	1.5	37	1.2	2.9	0.7
947D401K102AFGSN	400	1000	85	112	32	41300	60	2.1	42	1.2	2.9	0.7
947D421K102CDRSN	420	1000	100	87	50	43000	79	1.3	34	1.1	2.8	0.8
947D451K102AGGSN	450	1000	85	126	32	45000	60	2.3	46	1.2	2.7	0.8
947D451K102BFMSN	450	1000	90	112	45	44400	68	1.7	41	1.2	2.7	0.8
947D471K102DCRSN	470	1000	116	75	50	48500	98	0.9	35	0.9	2.5	0.9
947D491K102CERSN	490	1000	100	100	50	47100	78	1.4	38	1.1	2.5	0.9
947D501K102AHGSN	500	1000	85	136	32	47700	58	2.5	50	1.1	2.5	0.8
947D511K102BGMSN	510	1000	90	126	45	48300	67	1.8	45	1.2	2.5	0.9
947D551K102AJGSN	550	1000	85	150	32	51400	58	2.7	54	1.1	2.3	0.9
947D571K102BHMSN	570	1000	90	136	45	51200	66	2.0	49	1.2	2.3	0.9
947D571K102CFRSN	570	1000	100	112	50	50900	77	1.6	42	1.0	2.4	1.0
947D571K102DDRSN	570	1000	116	87	50	52800	96	1.0	40	0.8	2.3	1.1
947D601K102ALGSN	600	1000	85	162	32	54600	57	3.0	59	1.1	2.2	1.0
947D631K102BJMSN	630	1000	90	150	45	55100	65	2.2	53	1.1	2.2	1.0
947D641K102CGRSN	640	1000	100	126	50	55300	76	1.7	46	1.0	2.2	1.1
947D671K102DERSN	670	1000	116	100	50	57600	95	1.2	45	0.8	2.1	1.2
947D691K102BLMSN	690	1000	90	162	45	58500	64	2.3	58	1.1	2.1	1.1
947D721K102CHRSN	720	1000	100	136	50	58400	74	1.9	50	1.0	2.1	1.2
947D771K102DFRSN	770	1000	116	112	50	62000	94	1.3	50	0.8	1.9	1.3
947D791K102CJRSN	790	1000	100	150	50	62800	74	2.1	54	1.0	1.9	1.3
947D871K102CLRSN	870	1000	100	162	50	66600	73	2.2	59	0.9	1.8	1.4
947D871K102DGRSN	870	1000	116	126	50	67100	93	1.4	55	0.8	1.8	1.5
947D971K102DHRSN	970	1000	116	136	50	70700	91	1.5	60	0.8	1.7	1.6
947D102K102DJRSN	1000	1000	116	150	50	75800	90	1.7	65	0.8	1.6	1.7
947D112K102DLRSN	1100	1000	116	162	50	80200	89	1.8	70	0.8	1.5	1.8
947D191K112ACGSN	190	1100	85	75	32	31400	60	1.6	30	1.5	3.8	0.5
947D221K112BCMSN	220	1100	90	75	45	33900	65	1.5	30	1.4	3.5	0.6
947D231K112ADGSN	230	1100	85	87	32	34600	59	1.9	34	1.4	3.5	0.6
947D261K112BDMSN	260	1100	90	87	45	37300	68	1.5	33	1.2	3.2	0.6
947D271K112AEGSN	270	1100	85	100	32	38100	58	2.1	38	1.3	3.2	0.6
947D271K112CCRSN	270	1100	100	75	50	39300	77	1.2	30	1.2	3.1	0.7
947D311K112BEMSN	310	1100	90	100	45	41000	67	1.7	37	1.2	2.9	0.7
947D321K112AFGSN	320	1100	85	112	32	41300	57	2.3	42	1.3	2.9	0.7
947D331K112CDRSN	330	1100	100	87	50	43000	75	1.4	34	1.1	2.8	0.8
947D361K112AGGSN	360	1100	85	126	32	45000	56	2.5	46	1.2	2.7	0.8
947D361K112BFMSN	360	1100	90	112	45	44400	65	1.8	41	1.2	2.7	0.8

Type 947D Polypropylene, High Energy Density, DC Link Capacitors

High Current, High Capacitance for Inverter Applications

PartNumber	Cap C (µF)	Rated Voltage V_R (V_{DC})	Can Dia D (mm)	Can Height H (mm)	Lead Spacing S (mm)	Case Area (mm²)	Current T_A=55 °C Irms (A)	Typ ESR (mΩ)	Typ ESL (nH)	Thermal Resistance Θcc (°C/W)	Θca (°C/W)	Max Mass (kg)
947D371K112DCRSN	370	1100	116	75	50	48500	94	1.0	35	0.9	2.5	0.9
947D391K112CERSN	390	1100	100	100	50	47100	74	1.6	38	1.1	2.5	0.9
947D411K112BGMSN	410	1100	90	126	45	48300	64	2.0	45	1.1	2.5	0.9
947D421K112AHGSN	420	1100	85	136	32	47700	55	2.8	50	1.2	2.5	0.8
947D441K112AJGSN	440	1100	85	150	32	51400	55	3.0	54	1.1	2.3	0.9
947D451K112CFRSN	450	1100	100	112	50	50900	73	1.7	42	1.1	2.4	1.0
947D451K112DDRSN	450	1100	116	87	50	52800	92	1.1	40	0.9	2.3	1.1
947D461K112BHMSN	460	1100	90	136	45	51200	63	2.2	49	1.1	2.3	0.9
947D481K112ALGSN	480	1100	85	162	32	54600	54	3.2	59	1.1	2.2	1.0
947D501K112BJMSN	500	1100	90	150	45	55100	62	2.4	53	1.1	2.2	1.0
947D521K112CGRSN	520	1100	100	126	50	55300	72	1.9	46	1.0	2.2	1.1
947D541K112DERSN	540	1100	116	100	50	57600	91	1.3	45	0.8	2.1	1.2
947D551K112BLMSN	550	1100	90	162	45	58500	61	2.6	58	1.1	2.1	1.1
947D581K112CHRSN	580	1100	100	136	50	58400	71	2.1	50	1.0	2.1	1.2
947D621K112DFRSN	620	1100	116	112	50	62000	90	1.4	50	0.8	1.9	1.3
947D641K112CJRSN	640	1100	100	150	50	62800	70	2.2	54	1.0	1.9	1.3
947D701K112CLRSN	700	1100	100	162	50	66600	69	2.4	59	1.0	1.8	1.4
947D701K112DGRSN	700	1100	116	126	50	67100	89	1.5	55	0.8	1.8	1.5
947D781K112DHRSN	780	1100	116	136	50	70700	87	1.7	60	0.8	1.7	1.6
947D861K112DJRSN	860	1100	116	150	50	75800	86	1.8	65	0.8	1.6	1.7
947D941K112DLRSN	940	1100	116	162	50	80200	85	1.9	70	0.8	1.5	1.8
947D151K122ACGSN	150	1200	85	75	32	31400	57	1.8	30	1.5	3.8	0.5
947D181K122BCMSN	180	1200	90	75	45	33900	62	1.6	30	1.4	3.5	0.6
947D191K122ADGSN	190	1200	85	87	32	34600	56	2.0	34	1.4	3.5	0.6
947D221K122AEGSN	220	1200	85	100	32	38100	55	2.3	38	1.4	3.2	0.6
947D221K122BDMSN	220	1200	90	87	45	37300	65	1.6	33	1.2	3.2	0.6
947D221K122CCRSN	220	1200	100	75	50	39300	73	1.3	30	1.2	3.1	0.7
947D251K122BEMSN	250	1200	90	100	45	41000	64	1.8	37	1.1	2.9	0.7
947D261K122AFGSN	260	1200	85	112	32	41300	54	2.5	42	1.3	2.9	0.7
947D271K122CDRSN	270	1200	100	87	50	43000	72	1.5	34	1.2	2.8	0.8
947D291K122AGGSN	290	1200	85	126	32	45000	54	2.8	46	1.2	2.7	0.8
947D291K122BFMSN	290	1200	90	112	45	44400	62	2.0	41	1.1	2.7	0.8
947D311K122DCRSN	310	1200	116	75	50	48500	90	1.1	35	0.9	2.5	0.9
947D321K122CERSN	320	1200	100	100	50	47100	71	1.7	38	1.1	2.5	0.9
947D331K122AHGSN	330	1200	85	136	32	47700	53	3.0	50	1.2	2.5	0.8
947D331K122BGMSN	330	1200	90	126	45	48300	61	2.2	45	1.1	2.5	0.9
947D361K122AJGSN	360	1200	85	150	32	51400	52	3.3	54	1.2	2.3	0.9
947D371K122BHMSN	370	1200	90	136	45	51200	60	2.4	49	1.1	2.3	0.9
947D371K122CFRSN	370	1200	100	112	50	50900	69	1.9	42	1.1	2.4	1.0
947D371K122DDRSN	370	1200	116	87	50	52800	88	1.2	40	0.9	2.3	1.1
947D401K122ALGSN	400	1200	85	162	32	54600	52	3.5	59	1.1	2.2	1.0
947D411K122BJMSN	410	1200	90	150	45	55100	59	2.6	53	1.1	2.2	1.0

Type 947D Polypropylene, High Energy Density, DC Link Capacitors

High Current, High Capacitance for Inverter Applications

PartNumber	Cap C (µF)	Rated Voltage V_R (V_{DC})	Can Dia D (mm)	Can Height H (mm)	Lead Spacing S (mm)	Case Area (mm²)	Current T_A=55 °C Irms (A)	Typ ESR (mΩ)	Typ ESL (nH)	Thermal Resistance Θcc (°C/W)	Thermal Resistance Θca (°C/W)	Max Mass (kg)
947D421K122CGRSN	420	1200	100	126	50	55300	69	2.1	46	1.1	2.2	1.1
947D441K122DERSN	440	1200	116	100	50	57600	87	1.4	45	0.9	2.1	1.2
947D451K122BLMSN	450	1200	90	162	45	58500	58	2.8	58	1.0	2.1	1.1
947D471K122CHRSN	470	1200	100	136	50	58400	67	2.2	50	1.0	2.1	1.2
947D511K122DFRSN	510	1200	116	112	50	62000	86	1.5	50	0.8	1.9	1.3
947D521K122CJRSN	520	1200	100	150	50	62800	67	2.4	54	1.0	1.9	1.3
947D571K122CLRSN	570	1200	100	162	50	66600	66	2.6	59	1.0	1.8	1.4
947D571K122DGRSN	570	1200	116	126	50	67100	85	1.6	55	0.8	1.8	1.5
947D641K122DHRSN	640	1200	116	136	50	70700	83	1.8	60	0.8	1.7	1.6
947D711K122DJRSN	710	1200	116	150	50	75800	82	1.9	65	0.8	1.6	1.7
947D771K122DLRSN	770	1200	116	162	50	80200	81	2.1	70	0.8	1.5	1.8
947D131K132ACGSN	130	1300	85	75	32	31400	54	1.9	30	1.6	3.8	0.5
947D151K132BCMSN	150	1300	90	75	45	33900	60	1.7	30	1.5	3.5	0.6
947D161K132ADGSN	160	1300	85	87	32	34600	53	2.2	34	1.5	3.5	0.6
947D181K132BDMSN	180	1300	90	87	45	37300	62	1.8	33	1.1	3.2	0.6
947D191K132AEGSN	190	1300	85	100	32	38100	53	2.5	38	1.4	3.2	0.6
947D191K132CCRSN	190	1300	100	75	50	39300	70	1.4	30	1.2	3.1	0.7
947D211K132AFGSN	210	1300	85	112	32	41300	52	2.7	42	1.3	2.9	0.7
947D211K132BEMSN	210	1300	90	100	45	41000	61	2.0	37	1.1	2.9	0.7
947D231K132CDRSN	230	1300	100	87	50	43000	69	1.6	34	1.2	2.8	0.8
947D241K132AGGSN	240	1300	85	126	32	45000	51	3.0	46	1.3	2.7	0.8
947D241K132BFMSN	240	1300	90	112	45	44400	60	2.2	41	1.1	2.7	0.8
947D251K132DCRSN	250	1300	116	75	50	48500	87	1.2	35	0.9	2.5	0.9
947D271K132AHGSN	270	1300	85	136	32	47700	50	3.3	50	1.2	2.5	0.8
947D271K132CERSN	270	1300	100	100	50	47100	68	1.8	38	1.2	2.5	0.9
947D281K132BGMSN	280	1300	90	126	45	48300	59	2.4	45	1.0	2.5	0.9
947D301K132AJGSN	300	1300	85	150	32	51400	50	3.5	54	1.2	2.3	0.9
947D311K132BHMSN	310	1300	90	136	45	51200	58	2.7	49	1.0	2.3	0.9
947D311K132CFRSN	310	1300	100	112	50	50900	66	2.0	42	1.1	2.4	1.0
947D311K132DDRSN	310	1300	116	87	50	52800	85	1.3	40	0.9	2.3	1.1
947D331K132ALGSN	330	1300	85	162	32	54600	49	3.8	59	1.2	2.2	1.0
947D341K132BJMSN	340	1300	90	150	45	55100	57	2.9	53	1.0	2.2	1.0
947D351K132CGRSN	350	1300	100	126	50	55300	66	2.2	46	1.1	2.2	1.1
947D371K132DERSN	370	1300	116	100	50	57600	84	1.5	45	0.9	2.1	1.2
947D381K132BLMSN	380	1300	90	162	45	58500	56	3.1	58	1.0	2.1	1.1
947D391K132CHRSN	390	1300	100	136	50	58400	64	2.4	50	1.1	2.1	1.2
947D421K132DFRSN	420	1300	116	112	50	62000	82	1.6	50	0.9	1.9	1.3
947D431K132CJRSN	430	1300	100	150	50	62800	64	2.6	54	1.0	1.9	1.3
947D471K132CLRSN	470	1300	100	162	50	66600	63	2.8	59	1.0	1.8	1.4
947D481K132DGRSN	480	1300	116	126	50	67100	82	1.8	55	0.9	1.8	1.5
947D531K132DHRSN	530	1300	116	136	50	70700	80	1.9	60	0.8	1.7	1.6
947D591K132DJRSN	590	1300	116	150	50	75800	79	2.1	65	0.8	1.6	1.7
947D641K132DLRSN	640	1300	116	162	50	80200	78	2.2	70	0.8	1.5	1.8

Type 947D Polypropylene, High Energy Density, DC Link Capacitors

High Current, High Capacitance for Inverter Applications

Expected Lifetime Predictions

Capacitance:	C (µF)
Equivalent Series Resistance:	ESR (mΩ)
Frequency:	f (kHz)
Ripple Current:	I (A_{rms})
Ambient Temperature:	T_A (°C)
Core Temperature:	T_C (°C)
Total Thermal Resistance:	Θ (°C/W)
Thermal Resistance case-to-ambient:	Θ_{CA} (°C/W)
Thermal Resistance core-to-case:	Θ_{CC} (°C/W)
Airflow Speed:	v (m/s)
Applied Voltage:	V_A (V_{DC})
Rated Voltage:	V_R (V_{DC})

Use the 10 kHz ESR from the ratings tables.
For operation below 10 kHz, the ESR will need to be adjusted using the following equation: ESR - 31.83/(10C) + 31.83/(fC).

Compute Θ = ΘCC + ΘCA. In the ratings tables, ΘCA is for still air. For moving air use the capacitor surface area A and airflow speed v to calculate θca = 1/[A(5+17(v+0.1)0.66)].

Look up Expected Lifetime on the graph using V_A/V_R and $T_C = T_A + I^2$ (ESR/1000) Θ

The maximum allowed temperature rise is 40 °C and the maximum allowed core temperature is 95 °C.

Expected Lifetime vs Core Temperature and Applied DC Voltage

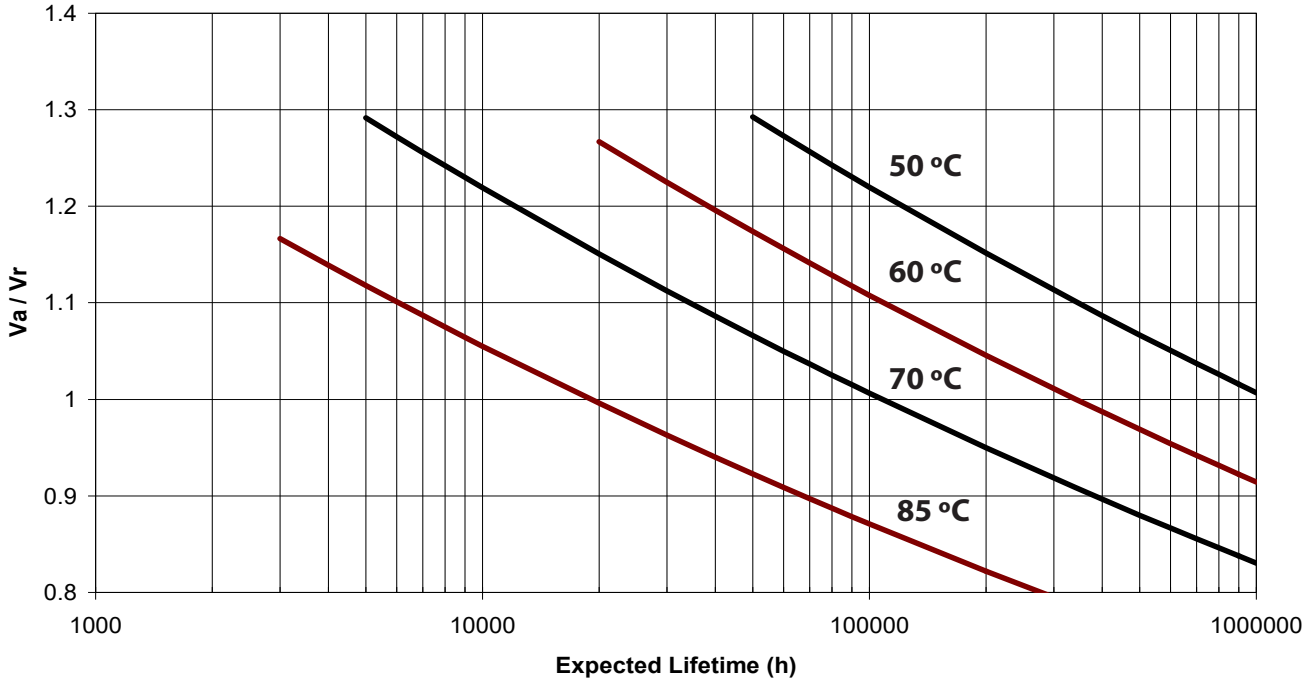

Type 947D Polypropylene, High Energy Density, DC Link Capacitors

High Current, High Capacitance for Inverter Applications

Typical Performance Curves

947D641K901AHGSN ESR vs Frequency and Temperature

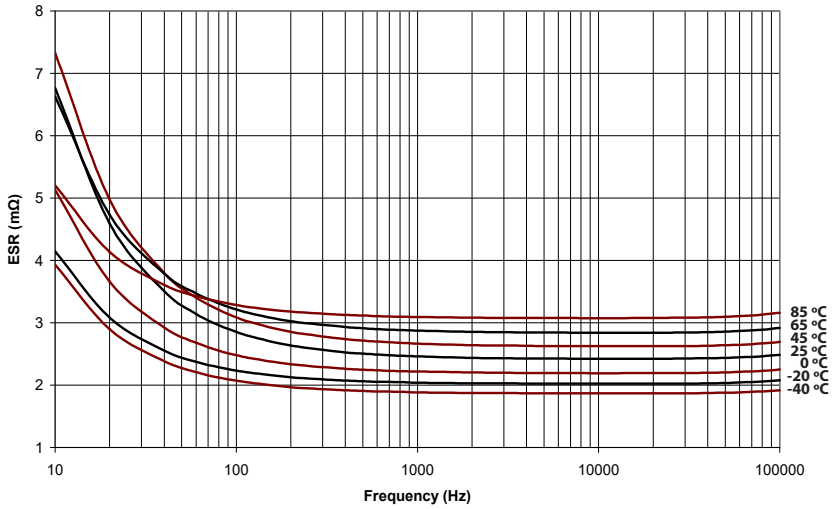

947D641K901AHGSN Rated Ripple Current, Still Air, 7kh Life

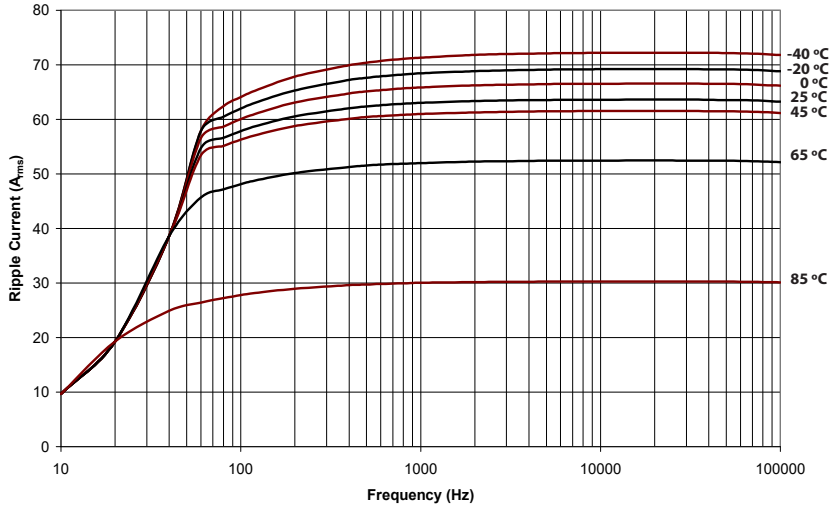

947D421K112AHGSN ESR vs Frequency and Temperature

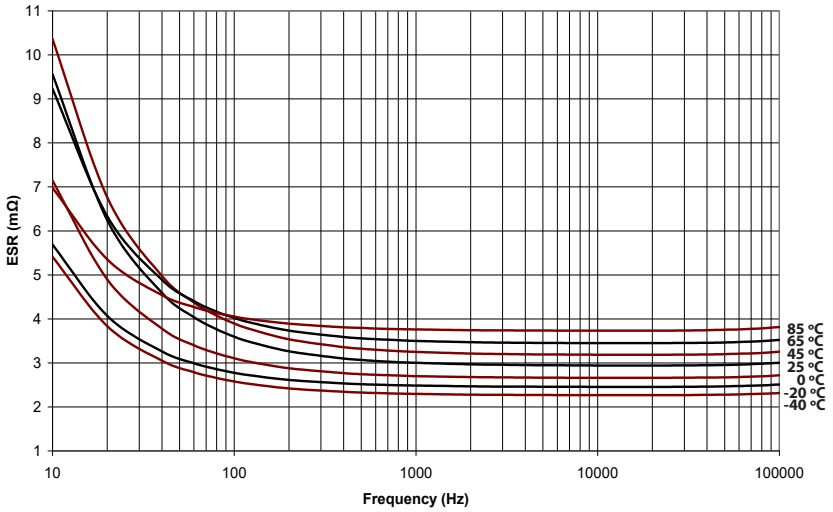

947D421K112AHGSN Rated Ripple Current, Still Air, 7kh Life

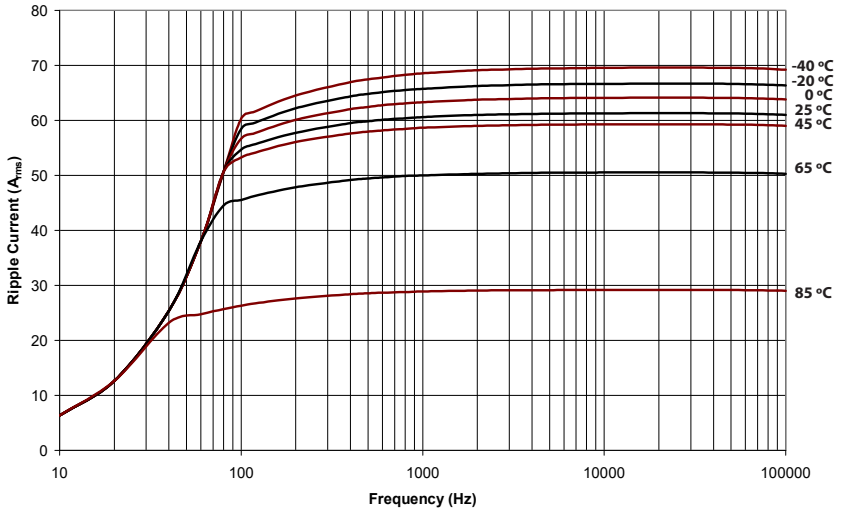

947D481K112ALGSN ESR vs Frequency and Temperature

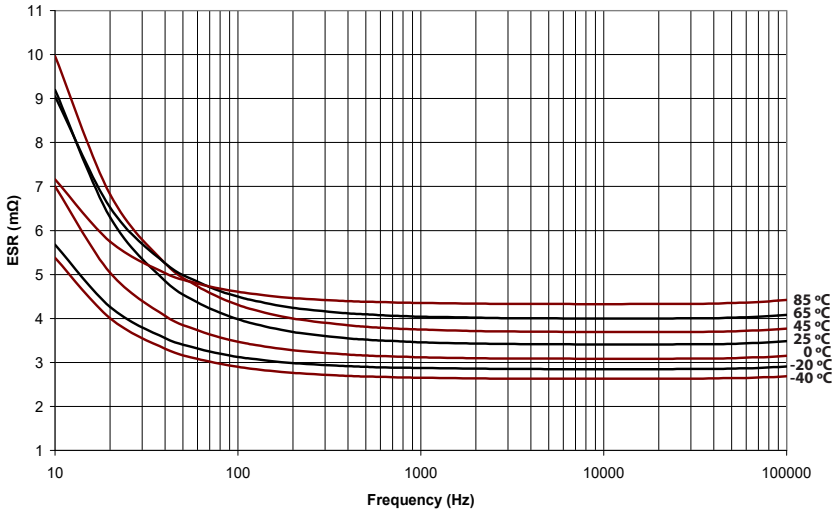

947D481K112ALGSN Rated Ripple Current, Still Air, 7kh Life

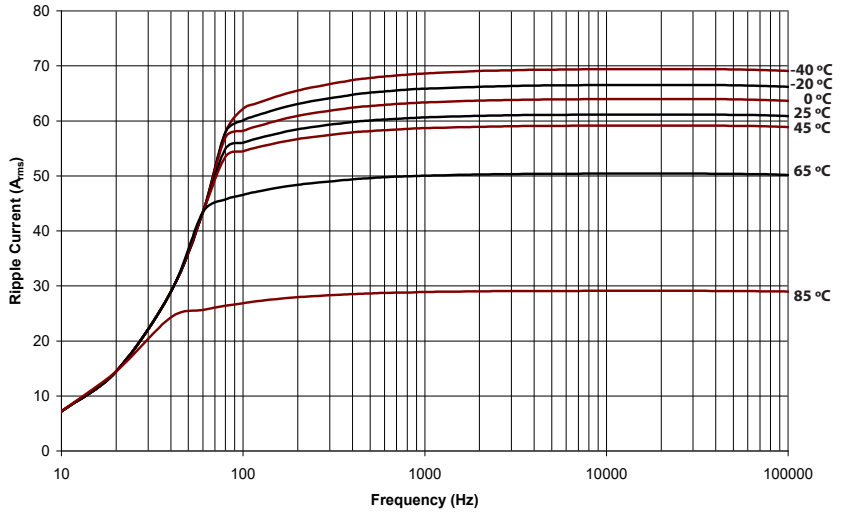

Notice and Disclaimer: All product drawings, descriptions, specifications, statements, information and data (collectively, the "Information") in this datasheet or other publication are subject to change. The customer is responsible for checking, confirming and verifying the extent to which the Information contained in this datasheet or other publication is applicable to an order at the time the order is placed. All Information given herein is believed to be accurate and reliable, but it is presented without any guarantee, warranty, representation or responsibility of any kind, expressed or implied. Statements of suitability for certain applications are based on the knowledge that the Cornell Dubilier company providing such statements ("Cornell Dubilier") has of operating conditions that such Cornell Dubilier company regards as typical for such applications, but are not intended to constitute any guarantee, warranty or representation regarding any such matter – and Cornell Dubilier specifically and expressly disclaims any guarantee, warranty or representation concerning the suitability for a specific customer application, use, storage, transportation, or operating environment. The Information is intended for use only by customers who have the requisite experience and capability to determine the correct products for their application. Any technical advice inferred from this Information or otherwise provided by Cornell Dubilier with reference to the use of any Cornell Dubilier products is given gratis (unless otherwise specified by Cornell Dubilier), and Cornell Dubilier assumes no obligation or liability for the advice given or results obtained. Although Cornell Dubilier strives to apply the most stringent quality and safety standards regarding the design and manufacturing of its products, in light of the current state of the art, isolated component failures may still occur. Accordingly, customer applications which require a high degree of reliability or safety should employ suitable designs or other safeguards (such as installation of protective circuitry or redundancies or other appropriate protective measures) in order to ensure that the failure of an electrical component does not result in a risk of personal injury or property damage. Although all product-related warnings, cautions and notes must be observed, the customer should not assume that all safety measures are indicated in such warnings, cautions and notes, or that other safety measures may not be required.

Type UNL, DC Link and Filter Capacitors

High Capacitance, High Current, Board Mount

Constructed using a low-loss polypropylene film, the UNL series offers high ripple current capabilities and high capacitance values making them ideal for electrolytic bank replacement and high ripple current applications.

Highlights

Advantages over Electrolytics

- Exceptionally low ESR
- Up to 10 times the ripple current
- Non-polar
- Higher voltage ratings
- Dry construction - no electrolyte
- Improved reliability

Specifications

Capacitance Range	4.7 to 100 µF
Capacitance Tolerance	±10% (K) standard
Rated Voltage	400 to 1500 Vdc
Operating Temperature Range	–55 °C to 105 °C* *Full rated voltage at 85 °C - derate linearly to 50% rated at 105 °C
Maximum rms Current	Check tables for values
Test Voltage between Terminals @ 25 °C	125% rated DC voltage for 60 s
Test Voltage between Terminals & Case @ 25 °C	3 kVac @ 50/60 Hz for 60 s
Life Test	2,000 h @ 85 °C, 125% rated voltage
Life Expectancy	60,000 h @ 70 °C, rated voltage
RoHS Compliant	

Dimensions

Construction Details	
Case Material	Plastic UL94V-0
Resin Material	Dry Resin UL94V-0
Terminal Material	Tin Plated Brass

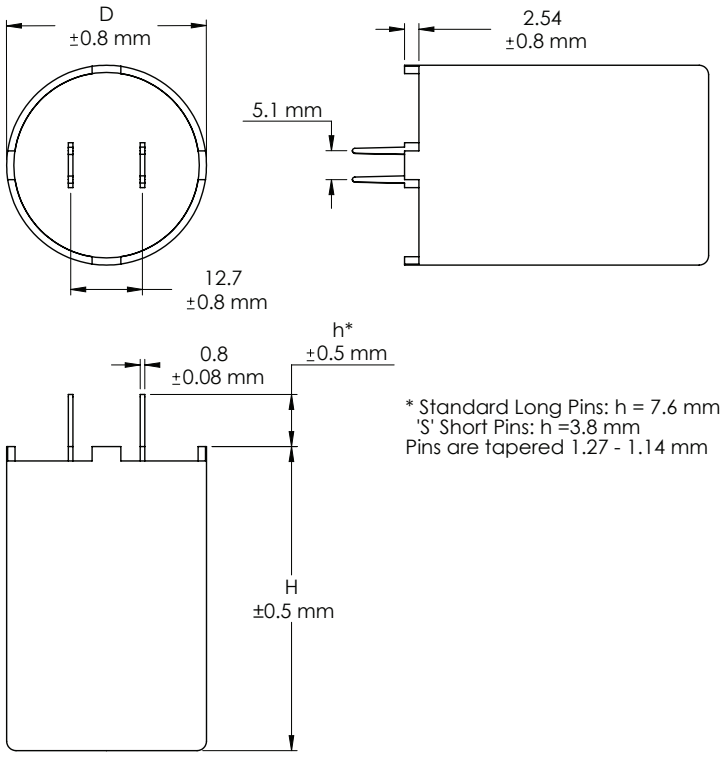

* Standard Long Pins: h = 7.6 mm
'S' Short Pins: h =3.8 mm
Pins are tapered 1.27 - 1.14 mm

Type UNL, DC Link and Filter Capacitors

High Capacitance, High Current, Board Mount

Part Numbering System

UNL	7	W20	K	S	–F
Type	**Voltage**	**Capacitance**	**Tolerance**	**Leads**	**RoHS**
UNL	4 = 400 Vdc	W80 = 80µF	K = ±10%	S = Short Pins	Compliant
	5 = 500Vdc	W100 = 100µF		Blank = Long Pins	
	6 = 600 Vdc	W30 = 30µF			
	7 = 750 Vdc	W50 = 50µF			
	8 = 800 Vdc	W40 = 40µF			
	9 = 900 Vdc	W13P5 = 13.5µF			
	10 = 1000 Vdc	W10 = 10µF			
	12 = 1200 Vdc	W7P5 = 7.5µF			
	15 = 1500 Vdc	W4P7 = 4.7µF			

Ratings

NOTE: Other ratings, sizes and performance specifications are available. Contact us.

Catalog Part Number*	Cap (µF)	Rated Voltage (Vdc)	Dia. D (mm)	Height H (mm)	Typical ESR @ 100 kHz (mΩ)	dV/dt (V/µs)	Peak Current (A)	Ripple Current @ 100 kHz		
								25 °C (Arms)	50 °C (Arms)	75 °C (Arms)
UNL4W30K-F	30.0	400	35	53.7	6.0	30	900	24.2	19.4	14.6
UNL4W80K-F	80.0	400	50	63	5.0	25	2000	35.0	28.0	14.3
UNL5W35K-F	35.0	500	35	53.7	8.0	26	910	22.0	18.2	13.0
UNL5W100K-F	100.0	500	50	63	6.0	22	2200	31.8	25.4	13.2
UNL6W30K-F	30.0	600	35	53.7	9.0	30	900	20.7	17.0	12.0
UNL6W80K-F	80.0	600	50	63	6.5	25	2000	30.5	24.4	12.6
UNL7W20K-F	20.0	750	35	53.7	10.0	37	740	19.0	16.0	9.9
UNL7W50K-F	50.0	750	50	63	7.0	30	1500	29.4	23.5	12.0
UNL8W15K-F	15.0	800	35	53.7	10.0	42	630	18.8	15.0	9.8
UNL8W40K-F	40.0	800	50	63	7.5	35	1400	28.4	22.8	11.7
UNL9W13P5K-F	13.5	900	35	53.7	10.5	43	580	18.0	14.5	9.6
UNL9W35K-F	35.0	900	50	63	8.0	36	1260	27.5	22.0	11.3
UNL10W10K-F	10.0	1000	35	53.7	12.0	50	500	17.5	13.7	9.0
UNL10W25K-F	25.0	1000	50	63	8.5	40	1000	26.7	21.4	11.0
UNL12W7P5K-F	7.5	1200	35	53.7	13.5	60	450	16.0	12.0	8.4
UNL12W20K-F	20.0	1200	50	63	9.0	50	1000	26.0	20.7	10.7
UNL15W4P7K-F	4.7	1500	35	53.7	15.0	72	338	15.0	11.5	7.8
UNL15W13K-F	13.0	1500	50	63	10.0	60	780	24.6	19.7	10.1

***Add 'S' after 'K' for short pins**

Typical Performance Curves

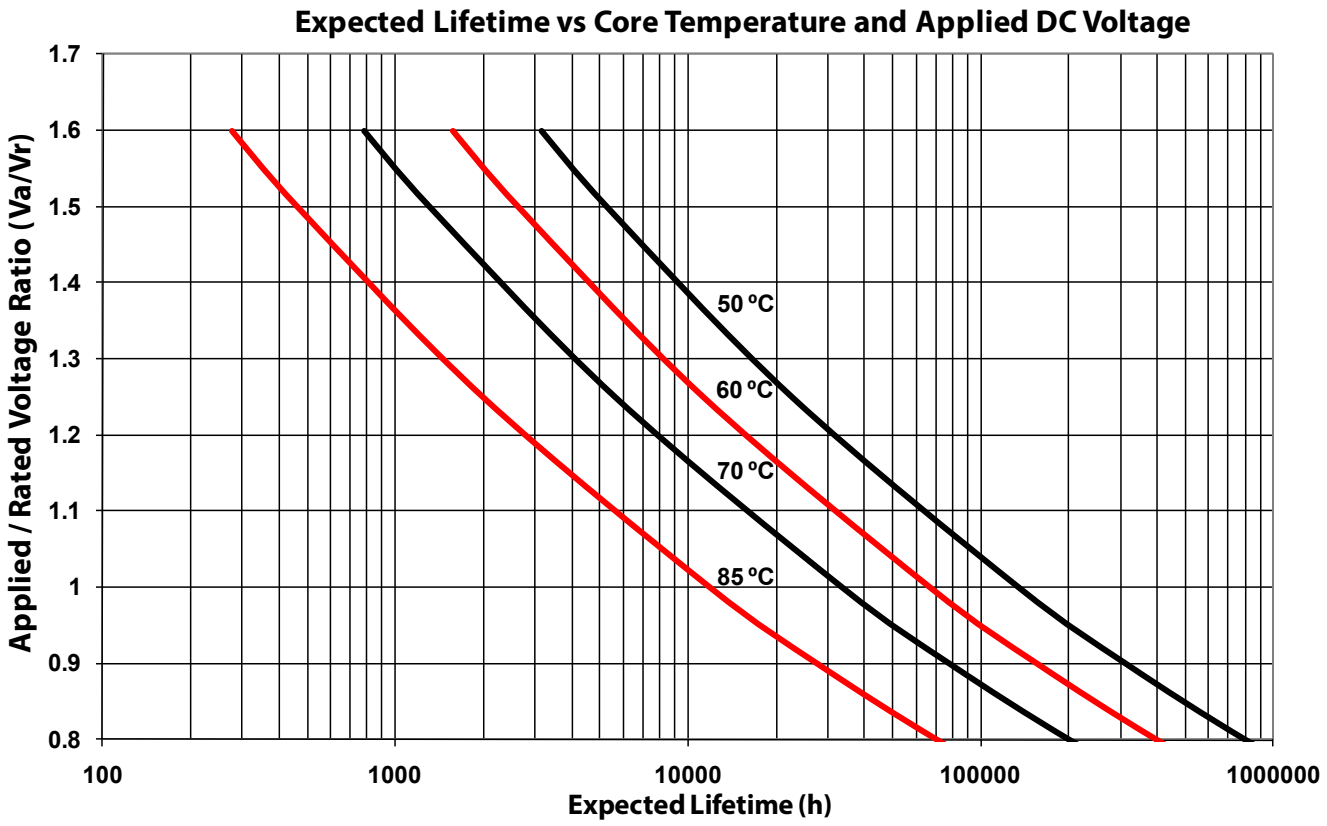

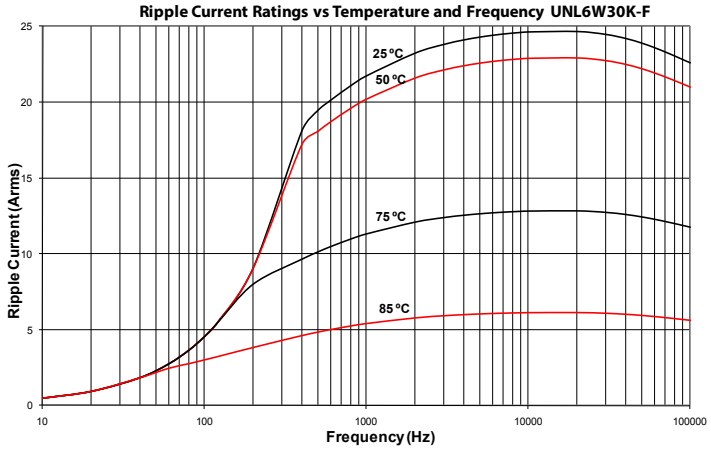

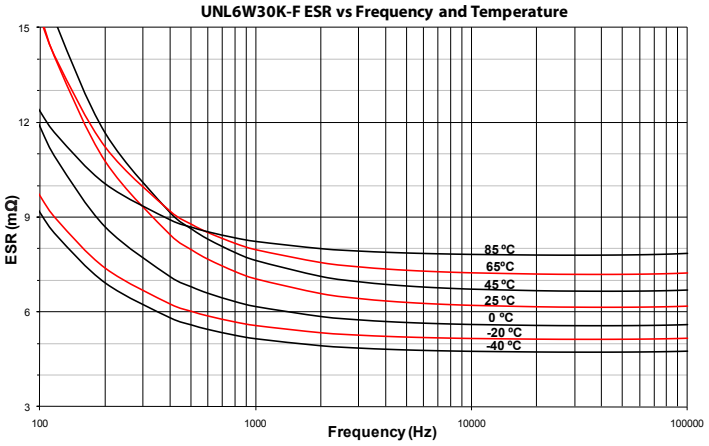

Notice and Disclaimer: All product drawings, descriptions, specifications, statements, information and data (collectively, the "Information") in this datasheet or other publication are subject to change. The customer is responsible for checking, confirming and verifying the extent to which the Information contained in this datasheet or other publication is applicable to an order at the time the order is placed. All Information given herein is believed to be accurate and reliable, but it is presented without any guarantee, warranty, representation or responsibility of any kind, expressed or implied. Statements of suitability for certain applications are based on the knowledge that the Cornell Dubilier company providing such statements ("Cornell Dubilier") has of operating conditions that such Cornell Dubilier company regards as typical for such applications, but are not intended to constitute any guarantee, warranty or representation regarding any such matter – and Cornell Dubilier specifically and expressly disclaims any guarantee, warranty or representation concerning the suitability for a specific customer application, use, storage, transportation, or operating environment. The Information is intended for use only by customers who have the requisite experience and capability to determine the correct products for their application. Any technical advice inferred from this Information or otherwise provided by Cornell Dubilier with reference to the use of any Cornell Dubilier products is given gratis (unless otherwise specified by Cornell Dubilier), and Cornell Dubilier assumes no obligation or liability for the advice given or results obtained. Although Cornell Dubilier strives to apply the most stringent quality and safety standards regarding the design and manufacturing of its products, in light of the current state of the art, isolated component failures may still occur. Accordingly, customer applications which require a high degree of reliability or safety should employ suitable designs or other safeguards (such as installation of protective circuitry or redundancies or other appropriate protective measures) in order to ensure that the failure of an electrical component does not result in a risk of personal injury or property damage. Although all product-related warnings, cautions and notes must be observed, the customer should not assume that all safety measures are indicated in such warnings, cautions and notes, or that other safety measures may not be required.

Type 940, Polypropylene Capacitors, for Pulse, Snubber

High dV/dt for Snubber Applications

Type 940 round, axial leaded film capacitors have polypropylene film and dual metallized electrodes for both self healing properties and high peak current carrying capability (dV/dt). This series features low ESR characteristics, excellent high frequency and high voltage capabilities.

Highlights

- High dV/dt
- High pulse current
- Low inductance
- Self healing

Specifications

Capacitance Range	0.01 to 4.7 µF
Capacitance Tolerance	±10 % (K) Standard; ±5% (J) Optional
Rated Voltage	600 to 3000 Vdc (275 to 500 Vac, 60 Hz)
Operating Temperature Range	–55 ºC to 105 ºC* *Full rated voltage at 85 ºC - derated linearly to 50% rated at 105 ºC
Maximum rms Current	Check tables for values
Insulation Resistance	> 100,000 MΩ x µF
Test Voltage between Terminals @ 25 ºC	160% rated DC voltage for 60 s
Test Voltage between Terminals & Case @ 25 ºC	3 kVac @ 50/60 Hz for 60 s
Life Test	2,000 h @ 85 ºC, 125% rated DC voltage
Life Expectancy	60,000 h @ rated Vdc, 70 ºC 30,000 h @ rated Vac, 70 ºC
Regulatory Information	

Dimensions

Construction Diagram

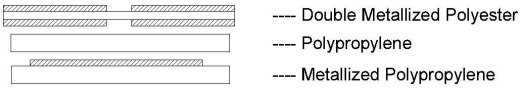

Construction Details	
Case Material	UL510 Polyester Tape Wrap
Resin Material	UL94V-0 Epoxy Fill
Terminal Material	Tin Plated Copper

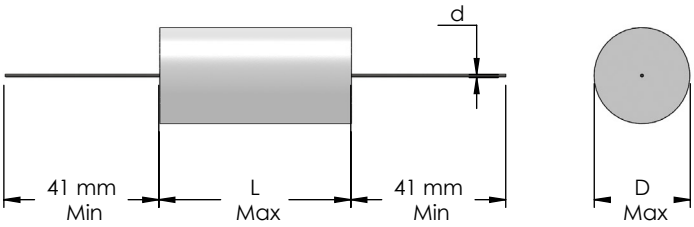

Type 940, Polypropylene Capacitors, for Pulse, Snubber

High dV/dt for Snubber Applications

Part Numbering System

940	C	6		P	22	K	–F
Series	Termination Code	Voltage Code		Capacitance Decimal Point	Capacitance Significant figures in µF	Tolerance Code	RoHS Compliant Indicator
940	C =Tinned Copper Wire	6 = 600 Vdc	16 = 1600 Vdc	S = 0.0		K = ±10%	
	F = Insulated Stranded Wire	8 = 800 Vdc	20 = 2000 Vdc	P = 0.		J = ±5%	
	H = Tinned Lugs	10 = 1000 Vdc	30 = 3000 Vdc	W = No decimal point			
		12 = 1200 Vdc					

Ratings

NOTE: Other ratings, sizes and performance specifications are available. Contact us.

Cap. (µF)	Catalog Part Number	D mm	L mm	d mm	Typical ESR (mΩ)	Typical ESL (nH)	dV/dt V/µs	I peak (A)	I_{RMS} 70 °C 100 kHz (A)
				600 Vdc (275 Vac)					
.10	940C6P1K-F	9.0	34.0	0.8	28	19	196	20	2.5
.15	940C6P15K-F	10.5	34.0	0.8	13	20	196	29	4.0
.22	940C6P22K-F	11.5	34.0	0.8	12	20	196	43	4.4
.33	940C6P33K-F	13.5	34.0	0.8	9	21	196	65	5.6
.47	940C6P47K-F	15.5	34.0	1.0	7	22	196	92	6.9
.68	940C6P68K-F	18.0	34.0	1.0	6	23	196	134	8.1
1.00	940C6W1K-F	21.0	34.0	1.0	6	24	196	196	8.9
1.50	940C6W1P5K-F	25.0	34.0	1.2	5	26	196	295	10.9
2.00	940C6W2K-F	23.5	46.0	1.2	5	31	128	255	11.8
3.30	940C6W3P3K-F	27.0	54.0	1.2	4	36	105	346	15.3
4.70	940C6W4P7K-F	31.5	54.0	1.2	4	38	105	492	16.8
				850 Vdc (450 Vac)					
.15	940C8P15K-F	13.0	34.0	0.8	8	21	713	107	5.8
.22	940C8P22K-F	15.5	34.0	1.0	8	22	713	157	6.4
.33	940C8P33K-F	18.0	34.0	1.0	7	23	713	235	7.5
.47	940C8P47K-F	21.0	34.0	1.0	5	24	713	335	9.8
.68	940C8P68K-F	24.5	34.0	1.2	4	26	713	485	12.0
1.00	940C8W1K-F	22.5	46.0	1.2	5	30	400	400	11.5
1.50	940C8W1P5K-F	27.0	46.0	1.2	4	32	400	600	14.3
2.00	940C8W2K-F	30.5	46.0	1.2	3	34	400	800	17.9
2.20	940C8W2P2K-F	32.0	46.0	1.2	3	34	400	880	18.4
2.50	940C8W2P5K-F	34.0	46.0	1.2	3	35	400	1000	19.1
				1000 Vdc (500 Vac)					
.15	940C10P15K-F	15.0	34.0	1.0	7	22	856	128	6.7
.22	940C10P22K-F	17.5	34.0	1.0	7	23	856	188	7.4
.33	940C10P33K-F	20.5	34.0	1.0	6	24	856	283	8.8
.47	940C10P47K-F	24.0	34.0	1.2	5	26	856	402	10.6
.68	940C10P68K-F	28.0	34.0	1.2	5	27	856	582	11.7
1.00	940C10W1K-F	26.0	46.0	1.2	5	32	480	480	12.5
1.50	940C10W1P5K-F	31.0	46.0	1.2	4	34	480	720	15.6
2.00	940C10W2K-F	35.5	46.0	1.2	3	36	480	960	19.6

Type 940, Polypropylene Capacitors, for Pulse, Snubber

High dV/dt for Snubber Applications

Cap. (µF)	Catalog Part Number	D mm	L mm	d mm	Typical ESR (mΩ)	Typical ESL (nH)	dV/dt V/µs	I peak (A)	I_{RMS} 70 °C 100 kHz (A)
1200 Vdc (500 Vac)									
.10	940C12P1K-F	15.5	34.0	1.0	9	22	1142	114	6.1
.15	940C12P15K-F	18.5	34.0	1.0	7	23	1142	171	7.6
.22	940C12P22K-F	21.5	34.0	1.0	7	24	1142	251	8.4
.33	940C12P33K-F	20.0	46.0	1.0	7	29	640	211	9.0
.47	940C12P47K-F	23.0	46.0	1.2	7	30	640	301	9.8
.68	940C12P68K-F	27.0	46.0	1.2	6	32	640	435	11.7
1.00	940C12W1K-F	33.0	46.0	1.2	5	35	640	640	14.5
1.50	940C12W1P5K-F	35.0	54.0	1.2	4	39	502	754	17.9
1600 Vdc (500 Vac)									
.10	940C16P1K-F	18.0	34.0	1.0	7	23	1427	143	7.5
.15	940C16P15K-F	21.5	34.0	1.0	5	24	1427	214	9.9
.22	940C16P22K-F	25.5	34.0	1.2	7	26	1427	314	9.3
.33	940C16P33K-F	23.5	46.0	1.2	7	31	800	264	10.0
.47	940C16P47K-F	27.5	46.0	1.2	6	32	800	376	11.8
.68	940C16P68K-F	32.5	46.0	1.2	6	35	800	544	13.1
1.00	940C16W1K-F	39.0	46.0	1.2	5	37	800	800	16.2
1.50	940C16W1P5K-F	42.0	54.0	1.2	4	42	628	942	20.1
2000 Vdc (500 Vac)									
.022	940C20S22K-F	11.5	34.0	0.8	35	6	1712	38	2.6
.033	940C20S33K-F	13.5	34.0	0.8	20	21	1712	57	3.8
.047	940C20S47K-F	15.0	34.0	1.0	12	22	1712	80	5.2
.068	940C20S68K-F	17.5	34.0	1.0	8	23	1712	116	6.9
.100	940C20P1K-F	21.0	34.0	1.0	7	24	1712	171	8.3
.150	940C20P15K-F	19.5	46.0	1.0	7	29	960	144	8.9
.220	940C20P22K-F	22.0	46.0	1.0	8	30	960	211	9.0
.330	940C20P33K-F	27.0	46.0	1.2	8	32	960	317	10.1
.470	940C20P47K-F	32.0	46.0	1.2	6	34	960	451	13.0
.560	940C20P56K-F	31.0	54.0	1.2	7	37	754	422	12.6
.680	940C20P68K-F	34.0	54.0	1.2	6	39	754	513	14.3
1.00	940C20W1K-F	41.0	54.0	1.2	5	42	754	754	17.7
3000 Vdc (500 Vac)									
.010	940C30S1K-F	11.5	34.0	0.8	60	20	2568	26	2.0
.015	940C30S15K-F	13.5	34.0	0.8	40	21	2568	39	2.7
.022	940C30S22K-F	15.5	34.0	1.0	25	22	2568	57	3.6
.033	940C30S33K-F	18.0	34.0	1.0	14	23	2568	85	5.3
.047	940C30S47K-F	16.5	46.0	1.0	14	28	1440	68	5.7
.068	940C30S68K-F	19.0	46.0	1.0	12	29	1440	98	6.7
.100	940C30P1K-F	22.5	46.0	1.2	10	30	1440	144	8.1
.150	940C30P15K-F	27.0	46.0	1.2	8	32	1440	216	10.1

RMS Voltage vs Frequency @ 25 °C

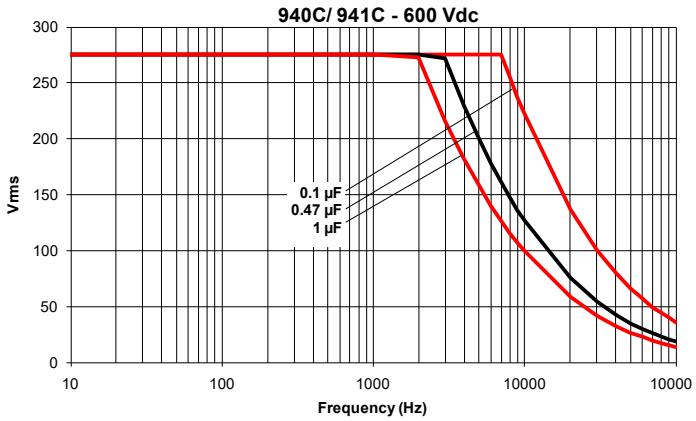

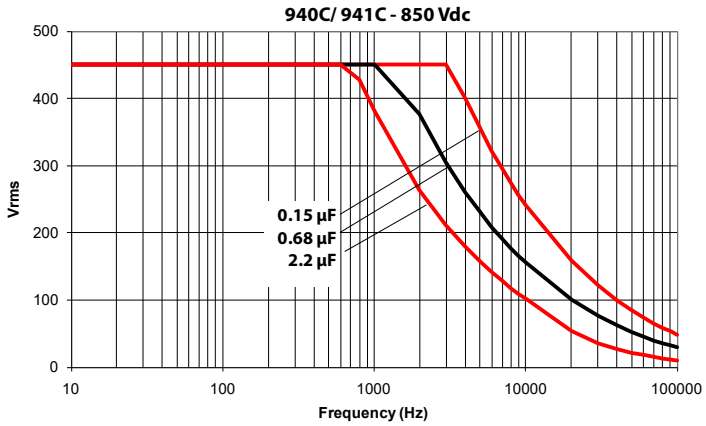

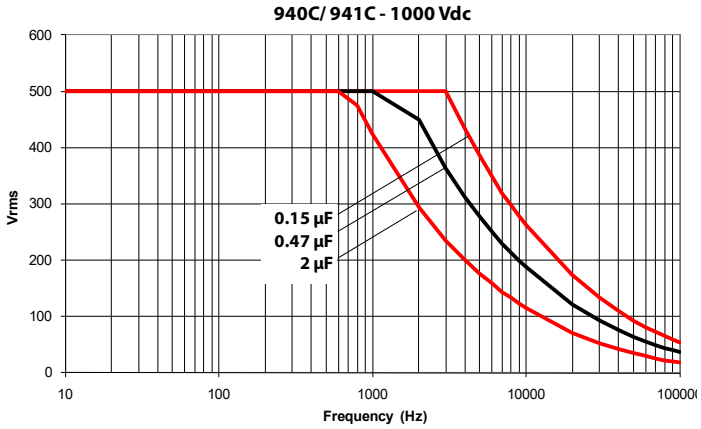

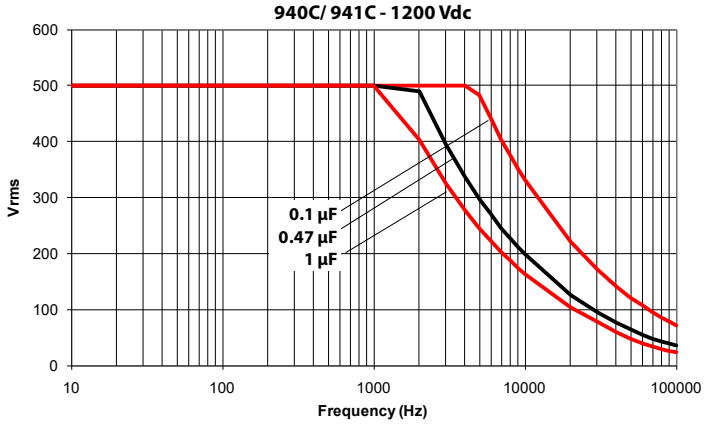

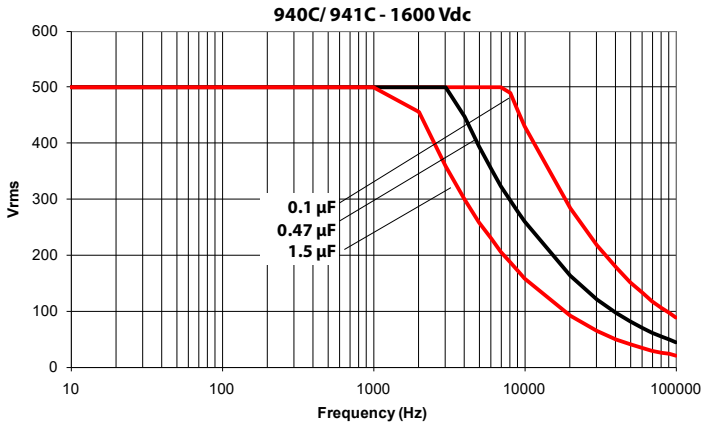

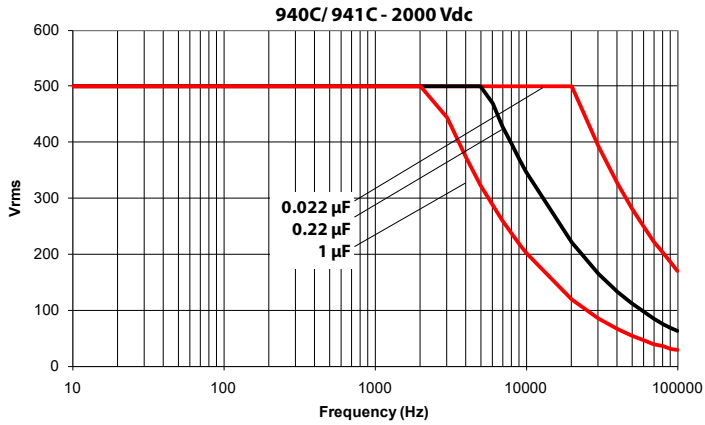

Notice and Disclaimer: All product drawings, descriptions, specifications, statements, information and data (collectively, the "Information") in this datasheet or other publication are subject to change. The customer is responsible for checking, confirming and verifying the extent to which the Information contained in this datasheet or other publication is applicable to an order at the time the order is placed. All Information given herein is believed to be accurate and reliable, but it is presented without any guarantee, warranty, representation or responsibility of any kind, expressed or implied. Statements of suitability for certain applications are based on the knowledge that the Cornell Dubilier company providing such statements ("Cornell Dubilier") has of operating conditions that such Cornell Dubilier company regards as typical for such applications, but are not intended to constitute any guarantee, warranty or representation regarding any such matter – and Cornell Dubilier specifically and expressly disclaims any guarantee, warranty or representation concerning the suitability for a specific customer application, use, storage, transportation, or operating environment. The Information is intended for use only by customers who have the requisite experience and capability to determine the correct products for their application. Any technical advice inferred from this Information or otherwise provided by Cornell Dubilier with reference to the use of any Cornell Dubilier products is given gratis (unless otherwise specified by Cornell Dubilier), and Cornell Dubilier assumes no obligation or liability for the advice given or results obtained. Although Cornell Dubilier strives to apply the most stringent quality and safety standards regarding the design and manufacturing of its products, in light of the current state of the art, isolated component failures may still occur. Accordingly, customer applications which require a high degree of reliability or safety should employ suitable designs or other safeguards (such as installation of protective circuitry or redundancies or other appropriate protective measures) in order to ensure that the failure of an electrical component does not result in a risk of personal injury or property damage. Although all product-related warnings, cautions and notes must be observed, the customer should not assume that all safety measures are indicated in such warnings, cautions and notes, or that other safety measures may not be required.

Type 941, Polypropylene Capacitors, for Pulse, Snubber

High dV/dt for Snubber Applications

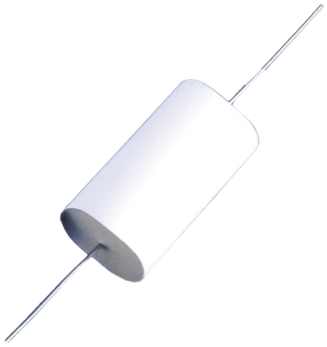

Type 941C flat, oval film capacitors are constructed with polypropylene film and dual metallized electrodes for both self healing properties and high peak current carrying capability (dV/dt). This series features low ESR characteristics, excellent high frequency and high voltage capabilities.

Highlights

- High dV/dt
- High ripple current
- Low inductance
- Self healing

Specifications

Capacitance Range	0.01 to 4.7 µF
Capacitance Tolerance	±10 % (K) Standard; ±5% (J) Optional
Rated Voltage	600 to 3000 Vdc (275 to 500 Vac, 60 Hz)
Operating Temperature Range	–55 °C to 105 °C* *Full rated voltage at 85 °C - derated linearly to 50% rated at 105 °C
Maximum rms Current	Check tables for values
Insulation Resistance	> 100,000 MΩ x µF
Test Voltage between Terminals @ 25 °C	160% rated DC voltage for 60 s
Test Voltage between Terminals & Case @ 25 °C	3 kVac @ 50/60 Hz for 60 s
Life Test	2,000 h @ 85 °C, 125% rated DC voltage
Life Expectancy	60,000 h @ rated Vdc, 70 °C 30,000 h @ rated Vac, 70 °C
Regulatory Information	

Dimensions

Construction Diagram

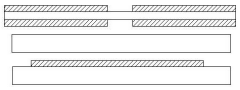

---- Double Metallized Polyester
---- Polypropylene
---- Metallized Polypropylene

Construction Details	
Case Material	UL510 Polyester Tape Wrap
Resin Material	UL94V-0 Epoxy Fill
Terminal Material	Tin Plated Copper

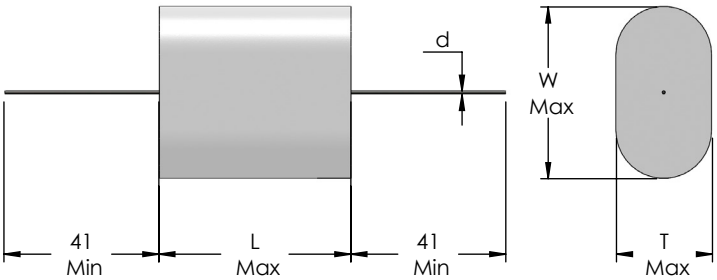

Type 941, Polypropylene Capacitors, for Pulse, Snubber

High dV/dt for Snubber Applications

Part Numbering System

941	C	6	P	22	K	–F
Series	Termination Code	Voltage Code	Capacitance Decimal Point	Capacitance Significant Figures (µF)	Tolerance Code	RoHS Compliant Indicator
941	C =Tinned Copper Wire F = Insulated Stranded Wire H = Tinned Lugs	6 = 600 Vdc 8 = 850 Vdc 10 = 1000 Vdc 12 = 1200 Vdc 16 = 1600 Vdc 20 = 2000 Vdc 30 = 3000 Vdc	S = 0.0 P = 0. W = No decimal point		K = ±10% J = ±5%	

Ratings

NOTE: Other ratings, sizes and performance specifications are available. Contact us.

Cap. (µF)	Catalog Part Number	T mm	W mm	L mm	d mm	Typical ESR (mΩ)	Typical ESL (nH)	dV/dt (V/µs)	I peak (A)	I_{RMS} 70 °C 100 kHz (A)
600 Vdc (275 Vac)										
.10	941C6P1K-F	5.7	11.9	34.0	0.8	28	17	196	20	2.8
.15	941C6P15K-F	6.8	13.0	34.0	0.8	13	18	196	29	4.4
.22	941C6P22K-F	8.1	14.3	34.0	0.8	12	19	196	43	4.9
.33	941C6P33K-F	9.8	16.1	34.0	0.8	9	19	196	65	6.1
.47	941C6P47K-F	11.7	18.0	34.0	0.8	7	20	196	92	7.6
.68	941C6P68K-F	14.2	20.4	34.0	1.0	6	21	196	134	8.9
1.0	941C6W1K-F	17.3	23.5	34.0	1.0	6	23	196	196	9.9
1.5	941C6W1P5K-F	21.3	27.5	34.0	1.2	5	24	196	295	12.1
2.0	941C6W2K-F	18.2	27.6	46.0	1.2	5	28	128	255	13.1
3.3	941C6W3P3K-F	22.5	31.8	54.0	1.2	4	34	105	346	17.3
4.7	941C6W4P7K-F	28.6	33.3	54.0	1.2	4	36	105	492	18.7
850 Vdc (450 Vac)										
.15	941C8P15K-F	9.6	15.9	34.0	0.8	8	19	713	107	6.4
.22	941C8P22K-F	11.6	17.9	34.0	0.8	8	20	713	157	7.0
.33	941C8P33K-F	14.3	20.6	34.0	1.0	7	21	713	235	8.3
.47	941C8P47K-F	17.1	23.4	34.0	1.0	5	22	713	335	10.8
.68	941C8P68K-F	20.7	27.0	34.0	1.2	4	24	713	485	13.3
1.0	941C8W1K-F	17.2	26.7	46.0	1.2	5	28	400	400	12.7
1.5	941C8W1P5K-F	21.5	30.9	46.0	1.2	4	30	400	600	15.8
2.0	941C8W2K-F	25.1	34.6	46.0	1.2	3	31	400	800	19.8
2.2	941C8W2P2K-F	26.5	35.9	46.0	1.2	3	32	400	880	20.4
2.5	941C8W2P5K-F	28.4	37.8	46.0	1.2	3	33	400	1000	21.2
1000 Vdc (500 Vac)										
.15	941C10P15K-F	11.2	17.5	34.0	0.8	7	20	856	128	7.4
.22	941C10P22K-F	13.6	19.9	34.0	1.0	7	21	856	188	8.1
.33	941C10P33K-F	16.7	23.0	34.0	1.0	6	22	856	283	9.7
.47	941C10P47K-F	20.1	26.3	34.0	1.2	5	24	856	402	11.7
.68	941C10P68K-F	24.2	30.5	34.0	1.2	5	26	856	582	13.0
1.0	941C10W1K-F	20.4	29.8	46.0	1.2	5	24	480	480	13.8
1.5	941C10W1P5K-F	25.4	34.8	46.0	1.2	4	31	480	720	17.3
2.0	941C10W2K-F	29.7	39.1	46.0	1.2	3	33	480	960	21.7

Type 941, Polypropylene Capacitors, for Pulse, Snubber

High dV/dt for Snubber Applications

Cap. (µF)	Catalog Part Number	T mm	W mm	L mm	d mm	Typical ESR (mΩ)	Typical ESL (nH)	dV/dt (V/µs)	I peak (A)	I_{RMS} 70 °C 100 kHz (A)
				1200 Vdc (500 Vac)						
.10	941C12P1K-F	11.7	18.0	34.0	0.8	9	20	1142	114	6.7
.15	941C12P15K-F	14.4	20.7	34.0	1.0	7	21	1142	171	8.3
.22	941C12P22K-F	17.5	23.8	34.0	1.0	7	23	1142	251	9.2
.33	941C12P33K-F	14.6	24.0	46.0	1.0	7	21	640	211	10.0
.47	941C12P47K-F	17.7	27.1	46.0	1.2	7	28	640	301	10.9
.68	941C12P68K-F	21.7	31.1	46.0	1.2	6	30	640	435	13.0
1.0	941C12W1K-F	26.7	36.1	46.0	1.2	5	32	640	640	15.9
1.5	941C12W1P5K-F	27.6	40.2	54.0	1.2	4	36	502	754	19.7
				1600 Vdc (500 Vac)						
.10	941C16P1K-F	14.3	20.6	34.0	1.0	7	21	1427	143	8.3
.15	941C16P15K-F	17.7	23.9	34.0	1.0	5	23	1427	214	11.0
.22	941C16P22K-F	21.5	27.8	34.0	1.2	7	24	1427	314	10.3
.33	941C16P33K-F	18.2	27.6	46.0	1.2	7	23	800	264	11.0
.47	941C16P47K-F	22.0	31.4	46.0	1.2	6	30	800	376	13.1
.68	941C16P68K-F	26.9	36.3	46.0	1.2	6	32	800	544	14.5
1.0	941C16W1K-F	33.1	42.5	46.0	1.2	5	35	800	800	17.9
1.5	941C16W1P5K-F	34.5	47.0	54.0	1.2	4	39	628	942	22.2
				2000 Vdc (500 Vac)						
.022	941C20S22K-F	7.9	14.2	34.0	0.8	35	18	1712	38	2.8
.033	941C20S33K-F	9.7	16.0	34.0	0.8	20	19	1712	57	4.1
.047	941C20S47K-F	11.6	17.8	34.0	0.8	12	20	1712	80	5.7
.068	941C20S68K-F	14.0	20.2	34.0	1.0	8	21	1712	116	7.7
.10	941C20P1K-F	17.0	23.3	34.0	1.0	7	22	1712	171	9.1
.15	941C20P15K-F	14.1	23.6	46.0	1.0	7	21	960	144	9.8
.22	941C20P22K-F	17.4	26.8	46.0	1.0	8	28	960	211	10.1
.33	941C20P33K-F	21.7	31.2	46.0	1.2	8	30	960	317	11.3
.47	941C20P47K-F	26.3	35.8	46.0	1.2	6	32	960	451	14.4
.56	941C20P56K-F	23.9	36.5	54.0	1.2	7	31	754	422	13.9
.68	941C20P68K-F	26.7	39.2	54.0	1.2	6	35	754	513	15.8
1.0	941C20W1K-F	33.1	45.6	54.0	1.2	5	38	754	754	19.4
				3000 Vdc (500 Vac)						
.010	941C30S1K-F	7.8	14.1	34.0	0.8	60	18	2568	26	2.2
.015	941C30S15K-F	9.5	15.8	34.0	0.8	40	19	2568	39	2.9
.022	941C30S22K-F	11.5	17.8	34.0	0.8	25	20	2568	57	4.0
.033	941C30S33K-F	14.2	20.4	34.0	1.0	14	21	2568	85	5.8
.047	941C30S47K-F	11.3	20.7	46.0	1.0	14	20	1440	68	6.3
.068	941C30S68K-F	13.8	23.3	46.0	1.0	12	26	1440	98	7.4
.10	941C30P1K-F	17.1	26.5	46.0	1.2	10	28	1440	144	9.0
.15	941C30P15K-F	21.3	30.7	46.0	1.2	8	30	1440	216	11.2

RMS Voltage vs Frequency @ 25 ºC

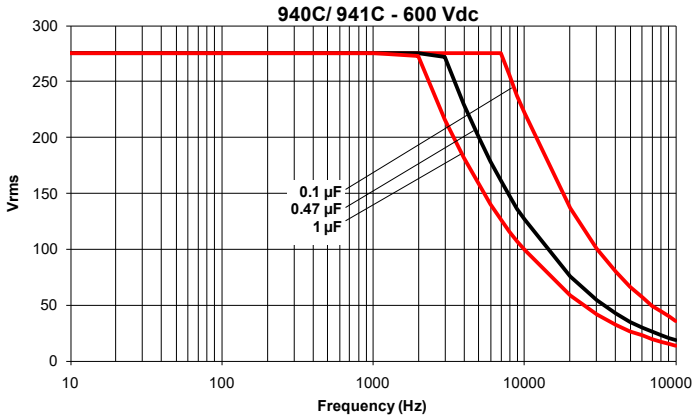

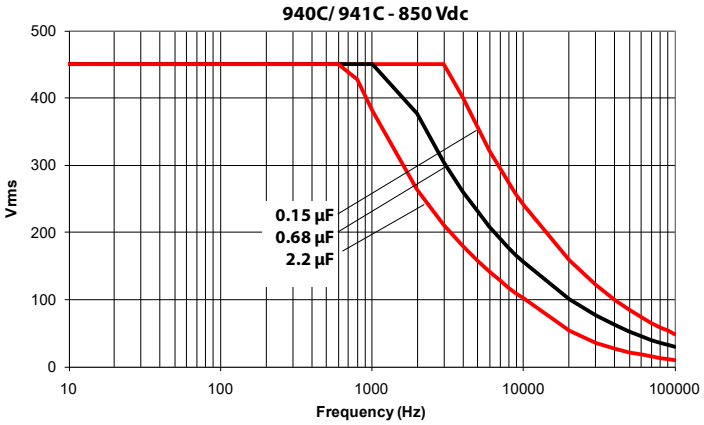

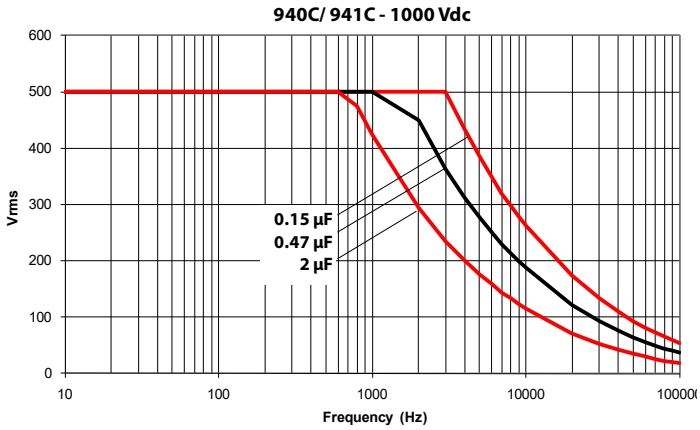

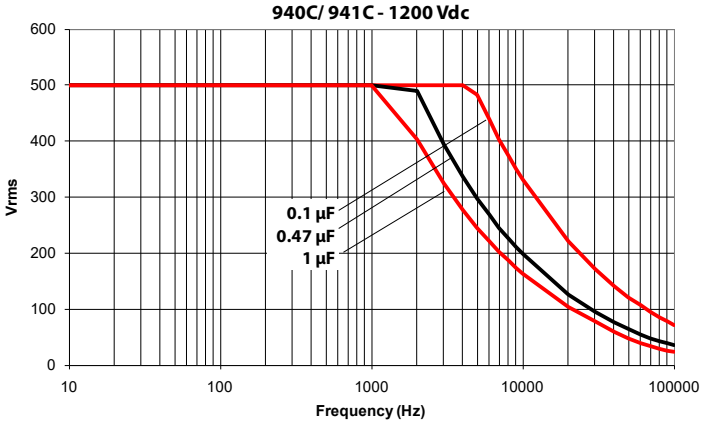

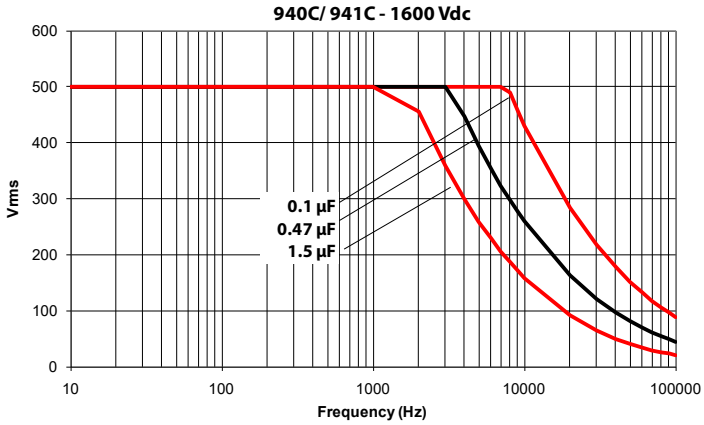

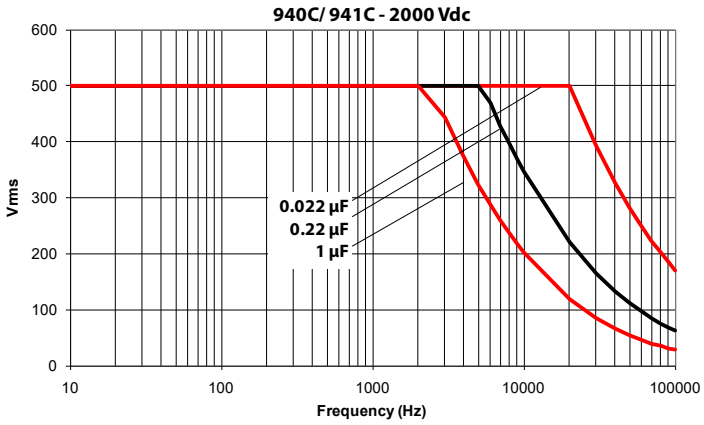

Notice and Disclaimer: All product drawings, descriptions, specifications, statements, information and data (collectively, the "Information") in this datasheet or other publication are subject to change. The customer is responsible for checking, confirming and verifying the extent to which the Information contained in this datasheet or other publication is applicable to an order at the time the order is placed. All Information given herein is believed to be accurate and reliable, but it is presented without any guarantee, warranty, representation or responsibility of any kind, expressed or implied. Statements of suitability for certain applications are based on the knowledge that the Cornell Dubilier company providing such statements ("Cornell Dubilier") has of operating conditions that such Cornell Dubilier company regards as typical for such applications, but are not intended to constitute any guarantee, warranty or representation regarding any such matter – and Cornell Dubilier specifically and expressly disclaims any guarantee, warranty or representation concerning the suitability for a specific customer application, use, storage, transportation, or operating environment. The Information is intended for use only by customers who have the requisite experience and capability to determine the correct products for their application. Any technical advice inferred from this Information or otherwise provided by Cornell Dubilier with reference to the use of any Cornell Dubilier products is given gratis (unless otherwise specified by Cornell Dubilier), and Cornell Dubilier assumes no obligation or liability for the advice given or results obtained. Although Cornell Dubilier strives to apply the most stringent quality and safety standards regarding the design and manufacturing of its products, in light of the current state of the art, isolated component failures may still occur. Accordingly, customer applications which require a high degree of reliability or safety should employ suitable designs or other safeguards (such as installation of protective circuitry or redundancies or other appropriate protective measures) in order to ensure that the failure of an electrical component does not result in a risk of personal injury or property damage. Although all product-related warnings, cautions and notes must be observed, the customer should not assume that all safety measures are indicated in such warnings, cautions and notes, or that other safety measures may not be required.

Type 942, Polypropylene Capacitors, for High Pulse, Snubber

Very High dV/dt for Snubber Applications

Type 942 round, axial film capacitors utilize a hybrid section design of polypropylene film, metal foils and metallized polypropylene dielectric to achieve both high peak current as well as superior rms current ratings. This series is ideal for high pulse operation and high peak current circuits.

Highlights

- Very high dV/dt
- Very high pulse current
- Low inductance
- Self Healing

Specifications

Capacitance Range	0.01 to 2.5 µF
Capacitance Tolerance	±10 % (K) Standard; ±5% (J) Optional
Rated Voltage	600 to 2000 Vdc (300 to 500 Vac, 60 Hz)
Operating Temperature Range	–55 °C to 105 °C* *Full rated voltage at 85 °C - derated linearly to 50% rated at 105 °C
Maximum rms Current	Check tables for values
Insulation Resistance	> 100,000 MΩ x µF
Test Voltage between Terminals @ 25°C	150% rated DC voltage for 60 s
Test Voltage between Terminals & Case @ 25 °C	3 kVac @ 50/60 Hz for 60 s
Life Test	2,000 h @ 85 °C, 125% rated DC voltage
Life Expectancy	60,000 h @ rated Vdc, 70 °C 30,000 h @ rated Vac, 70 °C
Regulatory Information	

Dimensions

Construction Diagram

Construction Details	
Case Material	UL510 Polyester Tape Wrap
Resin Material	UL94V-0 Epoxy Fill
Terminal Material	Tin Plated Copper

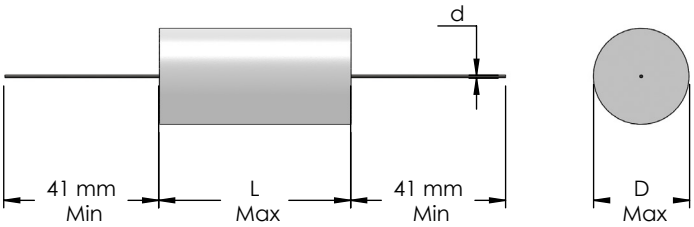

Type 942, Polypropylene Capacitors, for High Pulse, Snubber

Very High dV/dt for Snubber Applications

Part Numbering System

942	C	6	P	22	K	–F
Series	Termination Code	Voltage Code	Capacitance Decimal Point	Capacitance Significant Figures µF	Tolerance Code	RoHS Compliant Indicator
942	C = Tinned Copper Wire F = Insulated Stranded Wire H =Copper Lugs	6 = 600 Vdc 8 = 850 Vdc 10 = 1000 Vdc 12 = 1200 Vdc 16 = 1600 Vdc 20 = 2000 Vdc	S = 0.0 P = 0. W = No decimal point		K = ±10% J = ±5%	

Ratings

NOTE: Other ratings, sizes and performance specifications are available. Contact us.

Cap. (µF)	Catalog Part Number	D mm	L mm	d mm	Typical ESR (mΩ)	Typical ESL (nH)	dV/dt (V/µs)	I_{PEAK} (A)	I_{RMS} 70 °C 100 kHz (A)
600 Vdc (300 Vac)									
.15	942C6P15K-F	14.0	34.0	1.0	5	21	1427	214	7.7
.22	942C6P22K-F	16.0	34.0	1.0	7	22	1427	314	7.0
.33	942C6P33K-F	19.0	34.0	1.0	6	23	1427	471	8.4
.47	942C6P47K-F	22.0	34.0	1.0	5	24	1427	671	10.1
.68	942C6P68K-F	25.6	34.0	1.2	4	26	1427	970	12.4
1.00	942C6W1K-F	23.5	46.0	1.2	5	30	800	800	11.8
1.50	942C6W1P5K-F	28.5	46.0	1.2	4	32	800	1200	14.8
2.00	942C6W2K-F	28.5	54.0	1.2	3	36	628	1256	18.2
2.20	942C6W2P2K-F	30.0	54.0	1.2	3	36	628	1382	18.8
2.50	942C6W2P5K-F	32.0	54.0	1.2	3	37	628	1570	19.5
850 Vdc (360 Vac)									
.15	942C8P15K-F	15.5	34.0	1.0	5	22	1712	257	8.1
.22	942C8P22K-F	18.0	34.0	1.0	7	23	1712	377	7.5
.33	942C8P33K-F	21.5	34.0	1.0	6	24	1712	565	7.7
.47	942C8P47K-F	25.0	34.0	1.2	5	26	1712	805	10.9
.68	942C8P68K-F	29.5	34.0	1.2	4	27	1712	1164	13.6
1.00	942C8W1K-F	28.0	46.0	1.2	5	32	960	960	13.1
1.50	942C8W1P5K-F	29.0	54.0	1.2	4	36	754	1131	15.9
2.00	942C8W2K-F	29.5	64.0	1.2	3	41	574	1148	19.9
1000 Vdc (400 Vac)									
.10	942C10P1K-F	16.0	34.0	1.0	8	22	2283	228	6.6
.15	942C10P15K-F	19.0	34.0	1.0	7	23	2283	342	7.8
.22	942C10P22K-F	22.5	34.0	1.0	6	24	2283	502	9.3
.33	942C10P33K-F	21.0	46.0	1.0	5	29	1280	422	11.0
.47	942C10P47K-F	24.0	46.0	1.2	5	30	1280	601	11.9
.68	942C10P68K-F	28.5	46.0	1.2	5	32	1280	870	13.3
1.00	942C10W1K-F	30.0	54.0	1.2	5	37	1005	1005	14.6
1.40	942C10W1P4K-F	31.5	64.0	1.2	4	41	765	1071	17.9

Type 942, Polypropylene Capacitors, for High Pulse, Snubber

Very High dV/dt for Snubber Applications

Cap. (µF)	Catalog Part Number	D mm	L mm	d mm	Typical ESR (mΩ)	Typical ESL (nH)	dV/dt (V/µs)	I_{PEAK} (A)	I_{RMS} 70 °C 100 kHz (A)
1200 Vdc (430 Vac)									
.10	942C12P1K-F	19.0	34.0	1.0	5	23	2854	285	9.2
.15	942C12P15K-F	22.5	34.0	1.0	5	24	2854	428	10.2
.22	942C12P22K-F	26.5	34.0	1.2	6	26	2854	628	10.3
.33	942C12P33K-F	24.5	46.0	1.2	6	31	1600	528	11.0
.47	942C12P47K-F	29.0	46.0	1.2	5	32	1600	752	13.4
.68	942C12P68K-F	30.5	54.0	1.2	5	37	1256	854	14.7
.90	942C12P9K-F	31.0	64.0	1.2	5	41	957	861	15.9
1600 Vdc (460 Vac)									
.022	942C16S22K-F	12.0	34.0	1.0	27	20	3425	75	3.0
.033	942C16S33K-F	14.5	34.0	1.0	14	21	3425	113	4.7
.047	942C16S47K-F	16.5	34.0	1.0	8	22	3425	161	6.7
.068	942C16S68K-F	19.0	34.0	1.0	6	23	3425	233	8.4
.10	942C16P1K-F	22.5	34.0	1.0	4	24	3425	342	11.4
.15	942C16P15K-F	20.5	46.0	1.0	5	29	1919	288	10.9
.22	942C16P22K-F	23.5	46.0	1.0	5	68	1919	422	11.8
.33	942C16P33K-F	28.5	46.0	1.2	5	32	1919	633	13.3
.47	942C16P47K-F	30.0	54.0	1.2	5	36	1507	708	14.6
.56	942C16P56K-F	28.5	64.0	1.2	5	40	1148	643	15.1
.68	942C16P68K-F	31.5	64.0	1.2	5	42	1148	781	16.0
2000 Vdc (500 Vac)									
.01	942C20S1K-F	12.0	34.0	1.0	50	20	5137	51	2.2
.015	942C20S15K-F	14.5	34.0	1.0	40	21	5137	77	2.8
.022	942C20S22K-F	16.5	34.0	1.0	20	22	5137	113	4.2
.033	942C20S33K-F	19.5	34.0	1.0	12	23	5137	170	6.0
.047	942C20S47K-F	18.0	46.0	1.0	10	28	2879	135	7.1
.068	942C20S68K-F	20.5	46.0	1.0	6	29	2879	196	9.9
.10	942C20P1K-F	24.5	46.0	1.2	5	30	2879	288	12.1
.15	942C20P15K-F	29.5	46.0	1.2	5	32	2879	432	13.5

RMS Voltage vs Frequency @ 25 °C

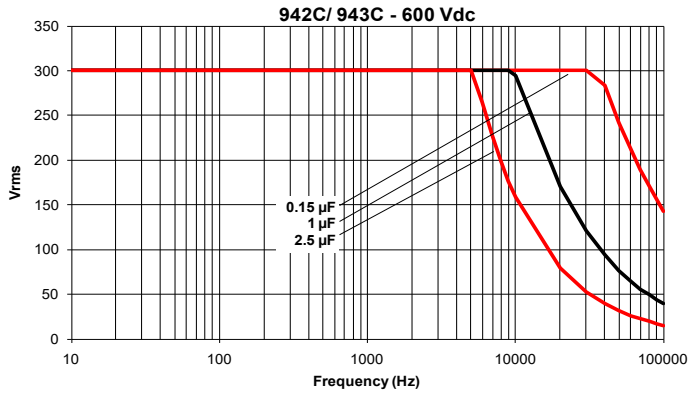

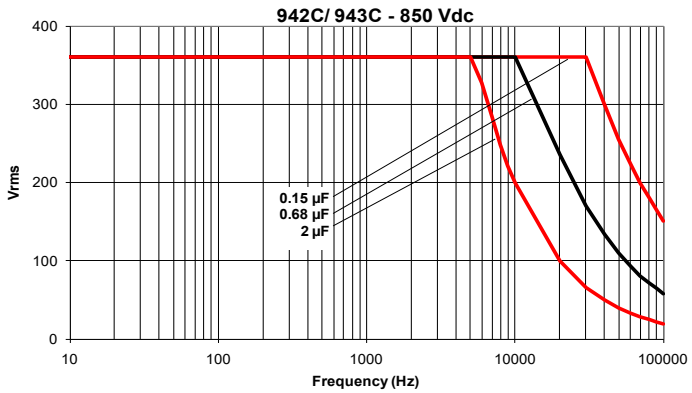

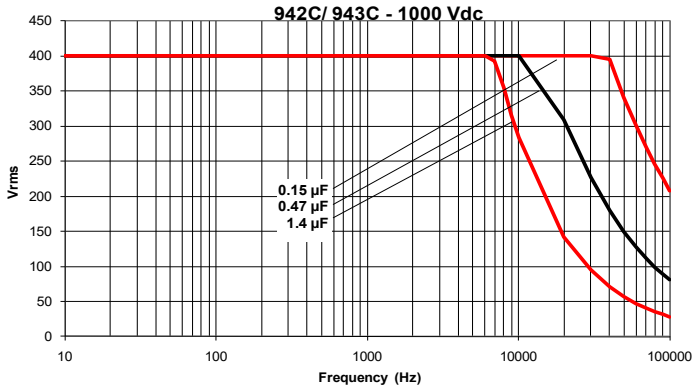

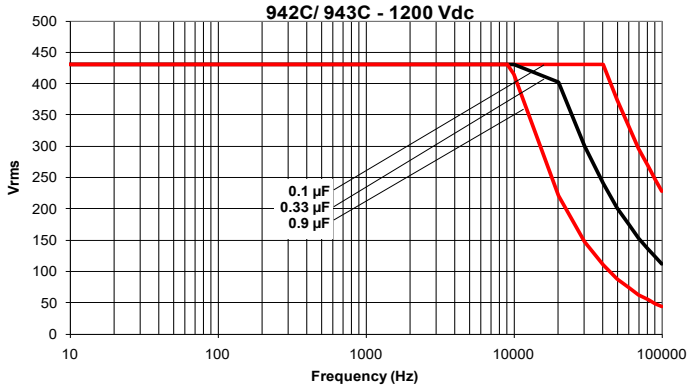

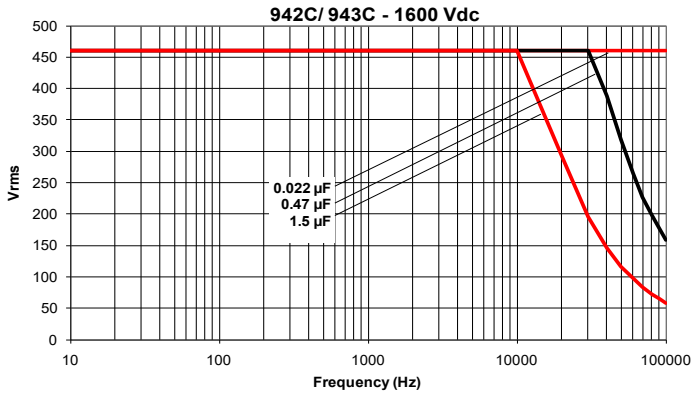

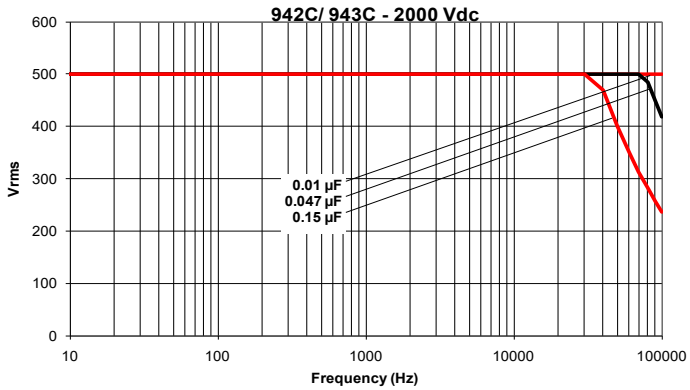

RMS Voltage vs Frequency @ 25 °C

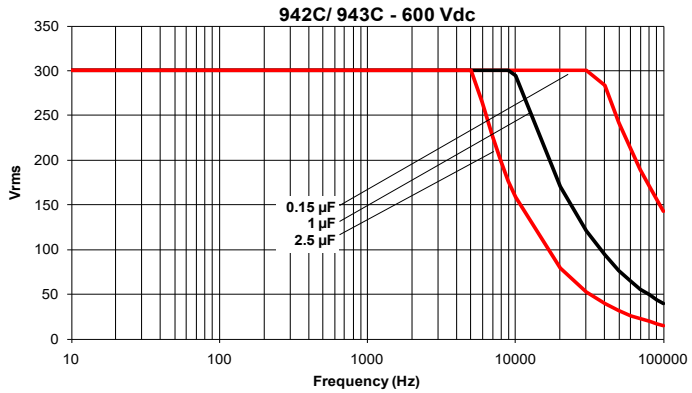

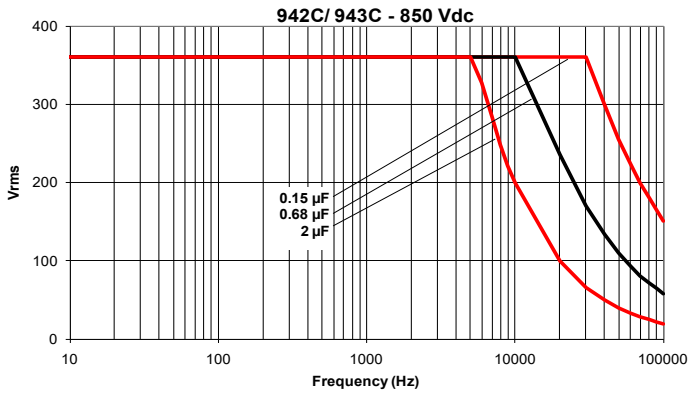

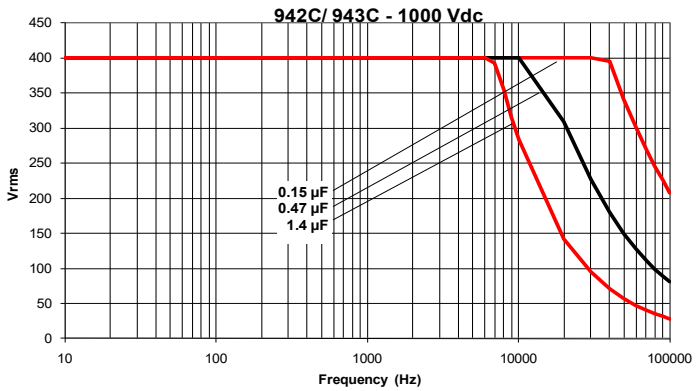

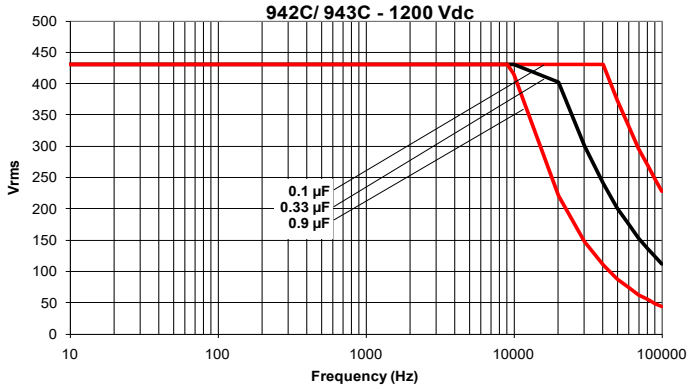

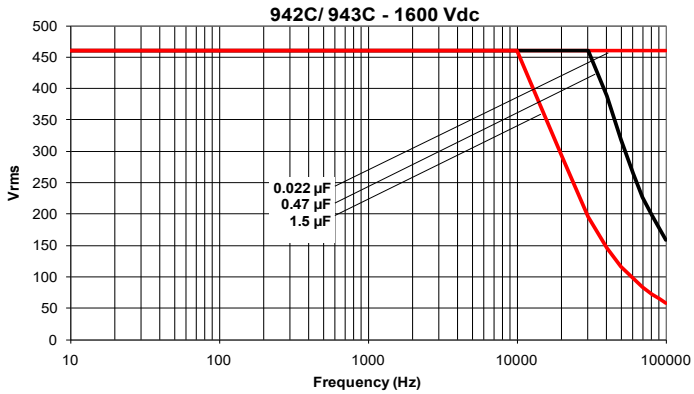

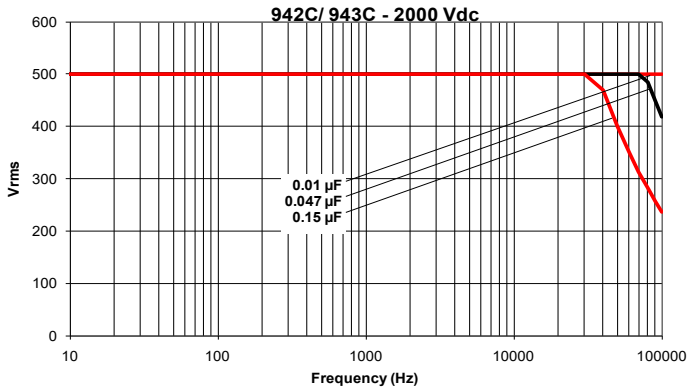

Notice and Disclaimer: All product drawings, descriptions, specifications, statements, information and data (collectively, the "Information") in this datasheet or other publication are subject to change. The customer is responsible for checking, confirming and verifying the extent to which the Information contained in this datasheet or other publication is applicable to an order at the time the order is placed. All Information given herein is believed to be accurate and reliable, but it is presented without any guarantee, warranty, representation or responsibility of any kind, expressed or implied. Statements of suitability for certain applications are based on the knowledge that the Cornell Dubilier company providing such statements ("Cornell Dubilier") has of operating conditions that such Cornell Dubilier company regards as typical for such applications, but are not intended to constitute any guarantee, warranty or representation regarding any such matter – and Cornell Dubilier specifically and expressly disclaims any guarantee, warranty or representation concerning the suitability for a specific customer application, use, storage, transportation, or operating environment. The Information is intended for use only by customers who have the requisite experience and capability to determine the correct products for their application. Any technical advice inferred from this Information or otherwise provided by Cornell Dubilier with reference to the use of any Cornell Dubilier products is given gratis (unless otherwise specified by Cornell Dubilier), and Cornell Dubilier assumes no obligation or liability for the advice given or results obtained. Although Cornell Dubilier strives to apply the most stringent quality and safety standards regarding the design and manufacturing of its products, in light of the current state of the art, isolated component failures may still occur. Accordingly, customer applications which require a high degree of reliability or safety should employ suitable designs or other safeguards (such as installation of protective circuitry or redundancies or other appropriate protective measures) in order to ensure that the failure of an electrical component does not result in a risk of personal injury or property damage. Although all product-related warnings, cautions and notes must be observed, the customer should not assume that all safety measures are indicated in such warnings, cautions and notes, or that other safety measures may not be required.

Type 943, Polypropylene Capacitors, for High Pulse, Snubber

Very High dV/dt for Snubber Applications

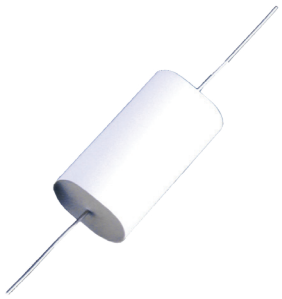

Type 943 oval, axial film capacitors utilize a hybrid section design of polypropylene film, metal foils and metallized polypropylene dielectric to achieve both high peak current as well as superior rms current ratings. This series is ideal for high pulse operation and high peak current circuits.

Highlights

- Very high dV/dt
- Very high pulse current
- Low inductance
- Self Healing

Specifications

Capacitance Range	0.01 to 2.5 µF
Capacitance Tolerance	±10 % (K) Standard; ±5% (J) Optional
Rated Voltage	600 to 2000 Vdc (300 to 500 Vac, 60 Hz)
Operating Temperature Range	–55 °C to 105 °C* *Full rated voltage at 85 °C - derated linearly to 50% rated at 105 °C
Maximum rms Current	Check tables for values
Insulation Resistance	> 100,000 MΩ x µF
Test Voltage between Terminals @ 25°C	150% rated DC voltage for 60 s
Test Voltage between Terminals & Case @ 25 °C	3 kVac @ 50/60 Hz for 60 s
Life Test	2,000 hours @ 85 °C, 125% rated DC voltage
Life Expectancy	60,000 h @ rated Vdc, 70 °C 30,000 h @ rated Vac, 70 °C
Regulatory Information	

Dimensions

Construction Diagram

Construction Details	
Case Material	UL510 Polyester Tape Wrap
Resin Material	UL94V-0 Epoxy Fill
Terminal Material	Tin Plated Copper

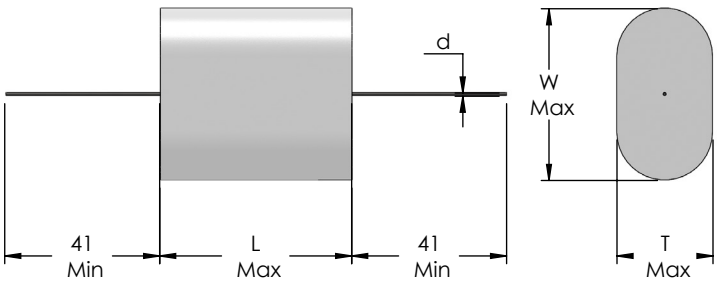

Type 943, Polypropylene Capacitors, for High Pulse, Snubber

Very High dV/dt for Snubber Applications

Part Numbering System

943	C	6	P	22	K	–F
Series	Termination Code	Voltage Code	Capacitance Decimal Point	Capacitance Significant Figures in µF	Tolerance Code	RoHS Compliant Indicator
943	C = Tinned Copper Wire F = Insulated Stranded Wire H = Tinned Lugs	6 = 600 Vdc 8 = 850 Vdc 10 = 1000 Vdc 12 = 1200 Vdc 16 = 1600 Vdc 20 = 2000 Vdc 30 = 3000 Vdc	S = 0.0 P = 0. W = No decimal point		J = ±5% H = ±6% K = ±10% M = ±20%	

Ratings

NOTE: Other capacitance values, sizes and performance specifications are available. Contact us.

Cap. (µF)	Catalog Part Number	T mm	W mm	L mm	d mm	Typical ESR (mΩ)	Typical ESL (nH)	dV/dt (V/µs)	I peak (A)	I_{RMS} 70 °C 100 kHz (A)
600 Vdc (300 Vac)										
.15	943C6P15K-F	12.3	17.0	34.0	1.0	5	19	1427	214	8.9
.22	943C6P22K-F	14.3	19.0	34.0	1.0	7	20	1427	314	8.1
.33	943C6P33K-F	17.1	21.8	34.0	1.0	6	22	1427	471	9.6
.47	943C6P47K-F	19.9	24.6	34.0	1.0	5	23	1427	671	11.4
.68	943C6P68K-F	23.5	28.3	34.0	1.2	4	24	1427	970	14.1
1.00	943C6W1K-F	19.2	28.6	46.0	1.2	5	28	800	800	13.4
1.50	943C6W1P5K-F	23.5	32.9	46.0	1.2	4	30	800	1200	16.6
2.00	943C6W2K-F	24.0	33.5	54.0	1.2	3	33	628	1256	20.6
2.20	943C6W2P2K-F	25.2	34.6	54.0	1.2	3	34	628	1382	21.1
2.50	943C6W2P5K-F	27.0	36.5	54.0	1.2	3	35	628	1570	21.9
850 Vdc (360 Vac)										
.15	943C8P15K-F	13.9	18.6	34.0	1.0	5	20	1712	257	9.4
.22	943C8P22K-F	16.4	21.0	34.0	1.0	7	21	1712	377	8.7
.33	943C8P33K-F	19.5	24.2	34.0	1.0	6	23	1712	565	10.3
.47	943C8P47K-F	22.9	27.6	34.0	1.2	5	24	1712	805	12.4
.68	943C8P68K-F	27.1	31.8	34.0	1.2	4	26	1712	1164	15.3
1.00	943C8W1K-F	22.4	31.8	46.0	1.2	5	29	960	960	14.5
1.50	943C8W1P5K-F	24.3	33.7	54.0	1.2	4	34	754	1131	18.0
2.00	943C8W2K-F	24.7	34.2	64.0	1.2	3	38	574	1147	22.4
1000 Vdc (400 Vac)										
.10	943C10P1K-F	14.4	19.2	34.0	1.0	8	20	2283	228	7.6
.15	943C10P15K-F	17.2	21.9	34.0	1.0	7	22	2283	342	8.9
.22	943C10P22K-F	20.4	25.1	34.0	1.0	6	23	2283	502	10.6
.33	943C10P33K-F	16.6	26.0	46.0	1.0	5	27	1280	422	12.5
.47	943C10P47K-F	19.7	29.1	46.0	1.2	5	28	1280	601	13.6
.68	943C10P68K-F	23.7	33.1	46.0	1.2	5	30	1280	870	14.9
1.00	943C10W1K-F	25.4	34.9	54.0	1.2	5	34	1005	1005	16.5
1.40	943C10W1P4K-F	26.3	36.0	64.0	1.2	4	39	765	1071	20.1

Type 943, Polypropylene Capacitors, for High Pulse, Snubber

Very High dV/dt for Snubber Applications

Cap. (µF)	Catalog Part Number	T mm	W mm	L mm	d mm	Typical ESR (mΩ)	Typical ESL (nH)	dV/dt (V/µs)	I peak (A)	I_{RMS} 70 °C 100 kHz (A)
					1200 Vdc (430 Vac)					
.1	943C12P1K-F	17.1	21.8	34.0.	1.0	5	22	2854	285	10.5
.15	943C12P15K-F	20.5	25.2	34.0	1.0	5	23	2854	428	11.6
.22	943C12P22K-F	24.4	29.1	34.0	1.2	6	25	2854	628	11.7
.33	943C12P33K-F	20.2	29.6	46.0	1.2	6	28	1600	528	12.5
.47	943C12P47K-F	24.0	33.4	46.0	1.2	5	30	1600	752	15.0
.68	943C12P68K-F	25.6	35.0	54.0	1.2	5	36	1256	854	16.5
.90	943C12P9K-F	25.7	35.1	64.0	1.2	5	39	956	860	17.7
					1600 Vdc (460 Vac)					
.022	943C16S22K-F	10.6	15.3	34.0	1.0	27	19	3425	75	3.5
.033	943C16S33K-F	12.4	17.1	34.0	1.0	14	20	3425	113	5.3
.047	943C16S47K-F	14.3	19.0	34.0	1.0	8	20	3425	161	7.6
.068	943C16S68K-F	16.7	21.4	34.0	1.0	6	21	3425	233	9.5
.10	943C16P1K-F	19.8	24.5	34.0	1.0	4	23	3425	342	12.8
.15	943C16P15K-F	16.1	25.5	46.0	1.0	5	26	1919	288	12.3
.22	943C16P22K-F	19.4	28.8	46.0	1.0	5	28	1919	422	13.5
.33	943C16P33K-F	23.7	33.2	46.0	1.2	5	30	1919	633	14.9
.47	943C16P47K-F	25.1	34.5	54.0	1.2	5	34	1507	708	16.3
.56	943C16P56K-F	24.3	33.7	64.0	1.2	5	38	1147	642	17.2
.68	943C16P68K-F	26.6	36.0	64.0	1.2	5	40	1147	780	18.0
					2000 Vdc (500 Vac)					
.010	943C20S1K-F	8.8	13.3	34.0	1.0	50	19	5137	51	2.6
.015	943C20S15K-F	10.5	14.9	34.0	1.0	40	19	5137	77	3.1
.022	943C20S22K-F	12.2	17.0	34.0	1.0	20	20	5137	113	4.8
.033	943C20S33K-F	14.5	19.6	34.0	1.0	12	22	5137	170	6.8
.047	943C20S47K-F	11.3	21.0	46.0	1.0	10	25	2879	135	8.0
.068	943C20S68K-F	13.5	23.0	46.0	1.0	6	26	2879	196	11.2
.10	943C20P1K-F	17.5	27.0	46.0	1.2	5	28	2879	288	14.9
.15	943C20P15K-F	21.0	30.4	46.0	1.2	5	30	2879	432	15.5

RMS Voltage vs Frequency @ 25 ºC

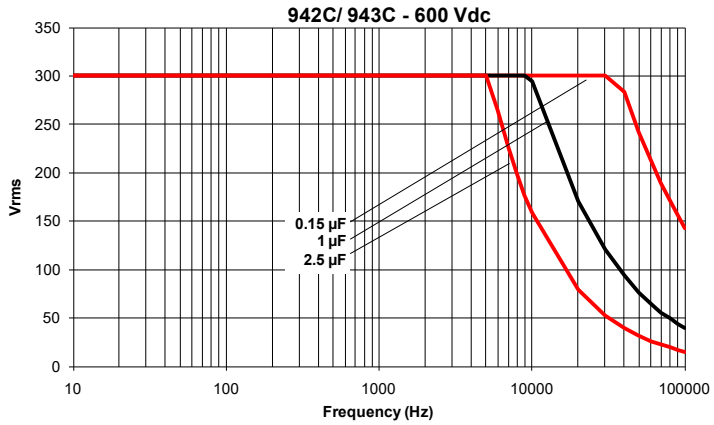

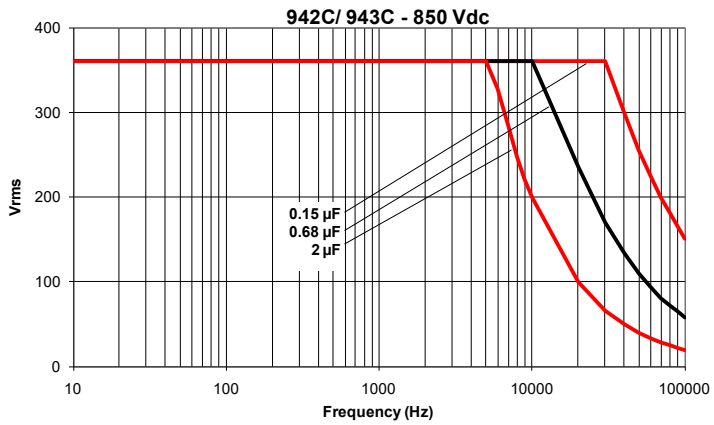

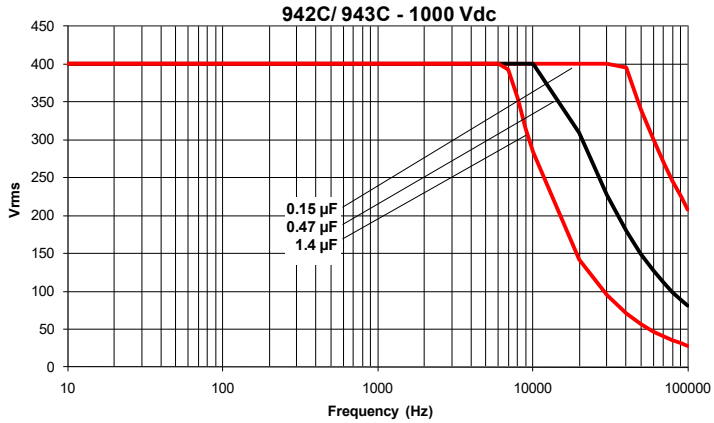

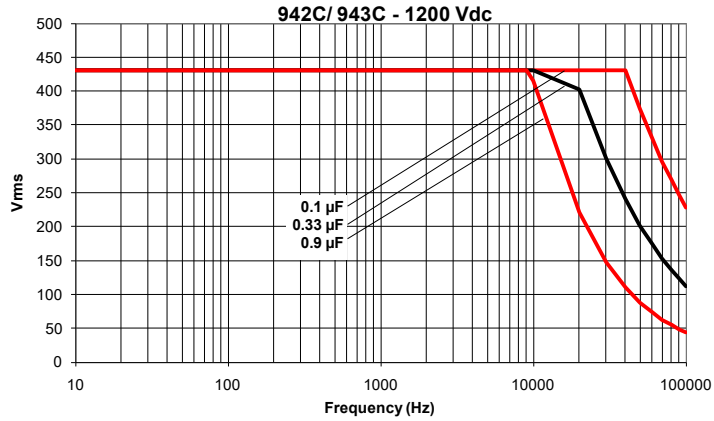

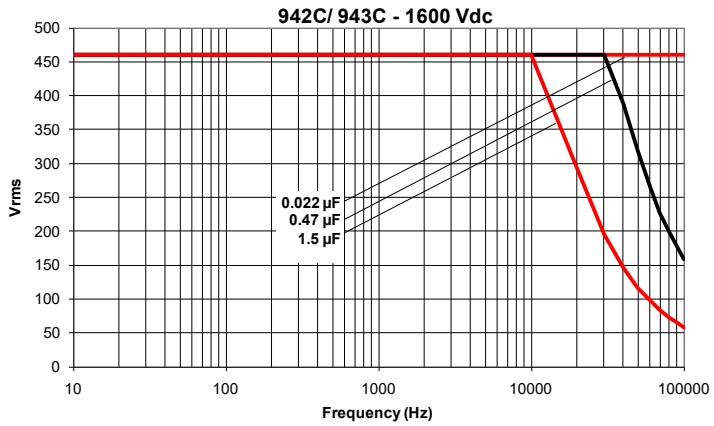

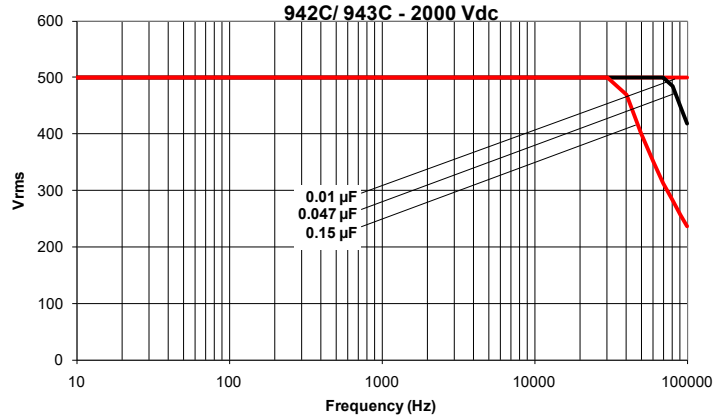

Notice and Disclaimer: All product drawings, descriptions, specifications, statements, information and data (collectively, the "Information") in this datasheet or other publication are subject to change. The customer is responsible for checking, confirming and verifying the extent to which the Information contained in this datasheet or other publication is applicable to an order at the time the order is placed. All Information given herein is believed to be accurate and reliable, but it is presented without any guarantee, warranty, representation or responsibility of any kind, expressed or implied. Statements of suitability for certain applications are based on the knowledge that the Cornell Dubilier company providing such statements ("Cornell Dubilier") has of operating conditions that such Cornell Dubilier company regards as typical for such applications, but are not intended to constitute any guarantee, warranty or representation regarding any such matter – and Cornell Dubilier specifically and expressly disclaims any guarantee, warranty or representation concerning the suitability for a specific customer application, use, storage, transportation, or operating environment. The Information is intended for use only by customers who have the requisite experience and capability to determine the correct products for their application. Any technical advice inferred from this Information or otherwise provided by Cornell Dubilier with reference to the use of any Cornell Dubilier products is given gratis (unless otherwise specified by Cornell Dubilier), and Cornell Dubilier assumes no obligation or liability for the advice given or results obtained. Although Cornell Dubilier strives to apply the most stringent quality and safety standards regarding the design and manufacturing of its products, in light of the current state of the art, isolated component failures may still occur. Accordingly, customer applications which require a high degree of reliability or safety should employ suitable designs or other safeguards (such as installation of protective circuitry or redundancies or other appropriate protective measures) in order to ensure that the failure of an electrical component does not result in a risk of personal injury or property damage. Although all product-related warnings, cautions and notes must be observed, the customer should not assume that all safety measures are indicated in such warnings, cautions and notes, or that other safety measures may not be required.

PMB/RMB

Metallized Polypropylene Film Capacitors

IGBT Direct Mount with Double-sided Electrodes

FEATURES	Power Semiconductor Module Protection - High Pulse and rms Current – Multiple Lug Styles
APPLICATIONS	Inverters – converters – UPS – Switching power supplies

Operating Temperature Range	**PMB: -40°C to +100°C, observing voltage and current de-rating RMB: -40°C to +85°C**								
Capacitance Tolerance	±10% at 1 kHz, 25°C ±5% optional								
Non-Recurrent SVDC	**WVDC**	**700**	**850**	**1000**	**1200**	**1500**	**2000**	**2500**	**3000**
	VAC (RMB)	1100	1300 (1200)	1550 (1300)	1750 (1600)	2200	2600 (2400)	3300	4000 (3500)
AC voltage (50/60 Hz)	**WVDC**	**700**	**850**	**1000**	**1200**	**1500**	**2000**	**2500**	**3000**
	VAC	420	500	575	630	650	700	725	750
	For T>+85°C , The voltage (DC/AC)must be decreased by (1.5/2.5)% per °C								
Dissipation Factor (MAX) 25°C	**Frequency (kHz)**	**C≤1uF**	**0.1<C≤1uF**	**1<C≤5.6uF**	**5.6<C≤9uF**	**C>9uF**			
	1	0.06%	0.5%	0.06%	0.07%	0.09%			
Insulation Resistance @25°C (<70% RH)for 1 minute at 100VDC applied	**Insulation Resistance**								
	30000 MΩxuF (not to exceed 30GΩ)								
Self Inductance	<1 nano-Henry per mm of lead spacing								
Capacitance Drift Factor	<0.5% after 2 years at 40°C								
Life Expectancy	100000 Hours @WVDC 30000 Hours @ VAC								
	Capacitance Change	≤3% of initially measured value							
Failure quota	300/ Billion component hours								
Damp Heat test	**56 days at40°C with 90 to 95%RH, +40°C and no voltage applied**								
	Capacitance Change	≤2% of initially measured value							
	Dissipation Factor	≤0.001 at 1kHz and 25°C							
	Insulation Resistance	≥50% of maximum specified value							
Self Inductance	<1 nano-Henry per mm of lead spacing								
Capacitance Drift Factor	<0.5% after 2 years at 40°C								
Capacitance Temperature Coefficient	-200 ppm/°C, ±100ppm/°C								
Dielectric Strength	**Terminal to Terminal**	**Terminal to case**							
	160% of rated VDC for 60 seconds/200% VDC applied for 2 Seconds and 25°C	3kVAC @ 50/60 Hz applied between terminals and case for 60 seconds at 25°C							
Dielectric	Polypropylene								
Construction	Double Metallized film with internal series connections								
Coating	Flame Retardant plastic box with epoxy resin (UL94V-0)								
Leads	Lead free tinned copper leads								

Americas / EU
Phone: 1-508-996-8561
Email: cdena@cde.com

CDE ENERGIZING IDEAS
CORNELL DUBILIER
ILLINOIS CAPACITOR

Asia
Phone: 852-2793-0931
Email: cdeasia@cde.com

PMB/RMB

Metallized Polypropylene Film Capacitors

IGBT Direct Mount with Double-sided Electrodes

STYLE S, SM8, T ,TM8

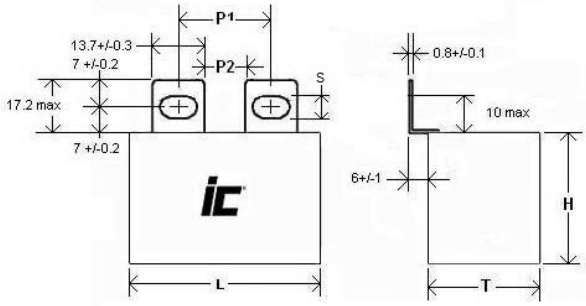

STYLE L

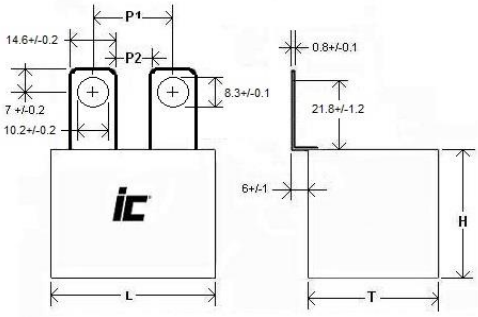

STYLE E

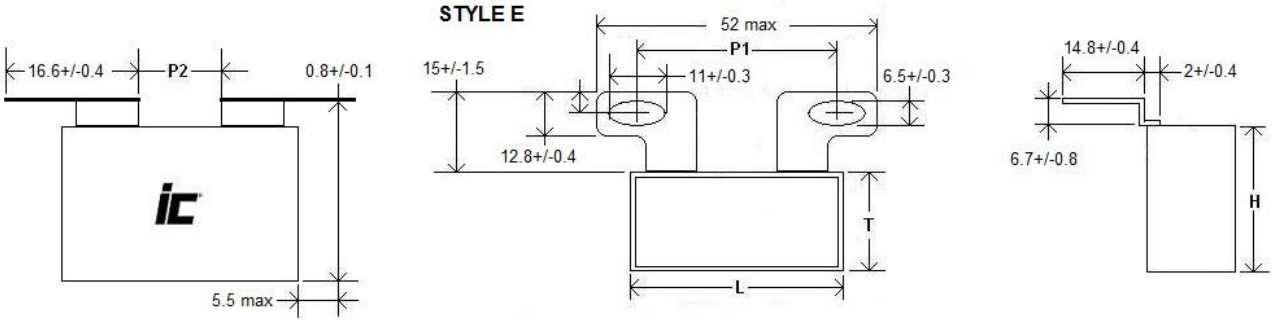

Style B

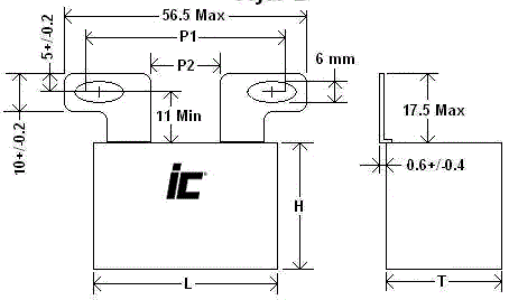

Style F, FM8, G, GM8

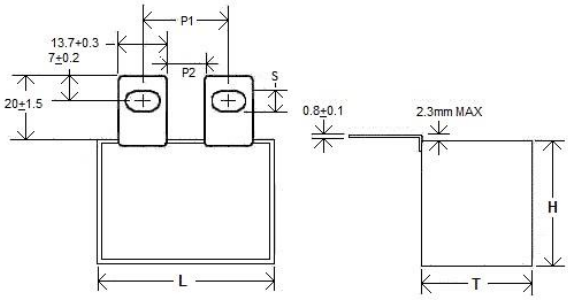

L=42.5mm, P1=23 to 28mm, P2=11mm MIN
L=57.5mm, P1=37 to 42mm, P2=24mm MIN

Fixing pitch and distance between lugs (mm)				
Lugs	L	P1	P2	S
S,V,F	42 - 42.5	23 - 28	11	6
	57.5	37 - 42	24	6
SM8,VM8, FM8	42 - 42.5	25 – 26	11	8
	57.5	39 - 40	24	8
T,W,G	42 - 42.5	20 – 25	8	6
	57.5	34 – 39	21	6
TM8,WM8,GM8	42 - 42.5	22 – 23	8	8
	57.5	36 – 37	21	8
N,P	57.5	23 – 28	11	6
NM8, PM8	57.5	25 - 26	11	8
A	40 - 42.5	53.5 – 63	----	8
	57.5	68.5 – 77	---	8
B	42 - 42.5	32 – 45	17	6
E	42 - 42.5	30 - 37	15	6
L	42 - 42.5	22 - 24	8	6
	57.5	36 - 38	21	8

Americas / EU
Phone: 1-508-996-8561
Email: cdena@cde.com

CDE ENERGIZING IDEAS
CORNELL DUBILIER
ILLINOIS CAPACITOR

Asia
Phone: 852-2793-0931
Email: cdeasia@cde.com

PMB/RMB

Metallized Polypropylene Film Capacitors

IGBT Direct Mount with Double-sided Electrodes

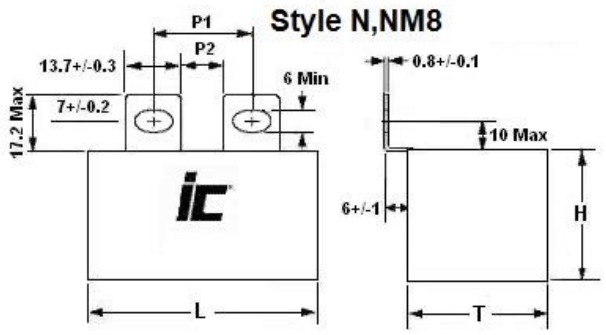

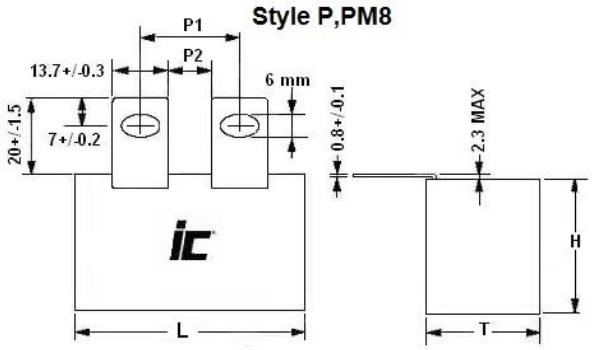

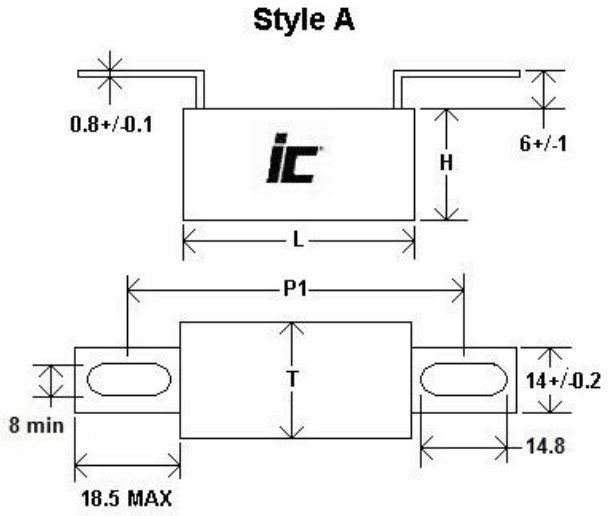

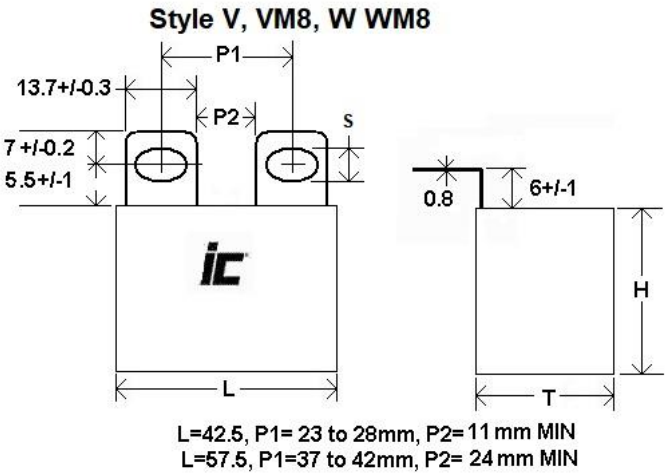

Americas / EU
Phone: 1-508-996-8561
Email: cdena@cde.com

CDE CORNELL DUBILIER
ENERGIZING IDEAS
ILLINOIS CAPACITOR

Asia
Phone: 852-2793-0931
Email: cdeasia@cde.com

PMB_RMB

Metallized Polypropylene, Power Semiconductor Direct Mount Snubber Lug terminals

WVDC	Capacitance (µF)	IC PART NUMBER	dv/dt (v/µ sec.)	Maximum RMS Ripple Current (A) 100 kHz, +70°C	Typical ESR (mΩ) 100 kHz, +25°C	Dims LxHxT (mm)
700	1	105PMB700K#	600	16.5	3.3	42.5x28x17
700	1.2	125PMB700K#P2	600	18	3.1	42.5x27.5x24.5
700	1.2	125PMB700KA#	600	18	3.1	42x32x17
700	1.5	155PMB700K#	600	20	2.8	42.5x33.5x22
700	1.5	155RMB700K#	455	13.5	4.7	42.5x28x17
700	2	205PMB700K#P1	600	23.5	2.5	42.5x35.5x33.5
700	2.2	225PMB700K#	600	24.5	2.4	42.5x35.5x33.5
700	2.2	225PMB700K#	600	24.5	2.4	42.5x35.5x33.5
700	2.2	225PMB700KA#	600	24.5	2.4	42.5x37x28
700	2.2	225RMB700K#	455	16.5	3.7	42.5x30x22
700	2.5	255PMB700K#P1	600	25.5	2.2	42.5x35.5x33.5
700	2.5	255RMB700K#	455	18	3.5	42.5x33.5x22
700	3	305PMB700K#P0	600	28.5	2.1	42.5x45x33
700	3	305PMB700KA#	600	28.5	2.1	42.5x45x30
700	3.3	335PMB700K#	600	28	2.1	42.5x45x33
700	3.3	335PMB700K#	600	29.5	2.1	42.5x45x33
700	3.3	335PMB700KA#	600	29.5	2.1	42.5x45x30
700	3.3	335RMB700K#	455	21	3.1	42.5x35.5x33.5
700	3.5	355PMB700K#P0	600	31.5	2	42.5x45x33
700	4	405PMB700K#	360	29	2.3	57.5x45x30
700	4	405RMB700K#	455	24	2.7	42.5x35.5x33.5
700	4.7	475PMB700K#	360	32.5	2.1	57.5x50x35
700	4.7	475RMB700K#	455	26.5	2.6	42.5x45x30
700	5	505PMB700K#	360	32	2.1	57.5x50x35
700	5	505PMB700K#	360	33	2.1	57.5x50x35
700	5	505RMB700K#	455	27.5	2.6	42.5x45x30
700	5.6	565PMB700K#	360	34	2	57.5x50x35
700	5.6	565RMB700K#	455	29.5	2.3	42.5x45x33
700	6.3	635PMB700K#	360	35.5	1.8	57.5x50x35
700	6.8	685PMB700K#	360	37.5	1.7	57.5x57.5x38
700	6.8	685RMB700K#	285	25	3.1	57.5x45x30
700	7.5	755RMB700K#	285	27	2.8	57.5x45x30
700	8	805RMB700K#	360	39.5	1.6	57.5x57.5x38
700	10	106RMB700K#	285	31.5	2.4	57.5x50x35
700	12	126RMB700K#	285	36.5	2.1	57.5x57.5x38
850	0.68	684PMB850K#	750	15	3.5	42.5x28x17
850	0.82	824PMB850K#	750	17	3.1	42.5x27.5x24.5
850	0.82	824PMB850KA#	750	17.5	3.1	42x32x17
850	1	105PMB850K#P2	750	19	2.7	42.5x27.5x24.5
850	1	105RMB850K#	600	13.5	4.9	42x32x14
850	1.5	155PMB850K#P1	750	24.5	2.2	42.5x35.5x33.5
850	1.5	155RMB850K#	600	16	4.5	42.5x33.5x22
850	1.75	175PMB850K#P1	750	26.5	2.1	42.5x35.5x33.5
850	1.75	175PMB850KA#	750	26.5	2.1	42.5x37x28
850	2	205PMB850K#P0	750	28.5	2	42.5x45x33
850	2	205PMB850KA#	750	28.5	2	42.5x45x30
850	2.2	225PMB850K#P0	750	29.5	2	42.5x45x33
850	2.2	225RMB850K#	600	19	4	42.5x35.5x33.5
850	2.2	225RMB850KA#	600	20	4	42.5x37x28
850	2.5	255PMB850K#P0	750	31.5	1.9	42.5x45x33
850	2.5	255RMB850K#	600	21	3.6	42.5x35.5x33.5
850	3	305PMB850K#	450	29.5	2.2	57.5x45x30
850	3	305RMB850K#	600	24.5	3.1	42.5x45x30
850	3.3	335PMB850K#	450	31	2.1	57.5x45x30
850	3.3	335RMB850K#	600	25.5	3.1	42.5x45x30
850	3.5	355RMB850K#	600	26.5	3	42.5x45x33
850	4	405PMB850K#	450	34	1.9	57.5x50x35
850	4	405RMB850K#	360	25	3.3	57.5x45x30

WVDC	Capacitance (µF)	IC PART NUMBER	dv/dt (v/µ sec.)	Maximum RMS Ripple Current (A) 100 kHz, +70°C	Typical ESR (mΩ) 100 kHz, +25°C	Dims LxHxT (mm)
850	4.7	475PMB850K#	450	36.5	1.8	57.5x50x35
850	5	505PMB850K#	360	37.5	1.8	57.5x57.5x38
850	5.6	565PMB850K#	450	39	1.6	57.5x57.5x38
850	5.6	565RMB850K#	360	29.5	2.9	57.5x50x35
850	6	605RMB850K#	450	39.5	1.6	57.5x57.5x38
850	6.8	685RMB850K#	360	31.5	2.6	57.5x57.5x38
850	8	805RMB850K#	360	35	2.3	57.5x57.5x38
1000	0.47	474PMB102K#	870	15	3.9	42.5x28x17
1000	0.68	684PMB102K#P2	870	17	3.3	42.5x27.5x24.5
1000	0.68	684RMB102K#	750	13.5	4.9	42.5x28x17
1000	0.75	754PMB102K#P2	870	18.5	3.1	42.5x27.5x24.5
1000	1	105RMB102K#	750	16.5	3.9	42.5x27.5x24.5
1000	1.2	125PMB102K#P1	870	23.5	2.5	42.5x35.5x33.5
1000	1.2	125PMB102KA#	870	24	2.5	42.5x37x28
1000	1.5	155PMB102K#P1	870	26	2.2	42.5x35.5x33.5
1000	1.75	175PMB102K#P0	870	28	2.1	42.5x45x33
1000	1.75	175RMB102K#	750	22	3.1	42.5x37x28
1000	2	205PMB102K#P0	870	29.5	2	42.5x45x33
1000	2	205PMB102KA#	870	29.5	2	42.5x45x30
1000	2.2	225PMB102K#	500	27.5	2.5	57.5x45x30
1000	2.2	225RMB102K#	750	25.5	3	42.5x45x33
1000	2.2	225RMB102KA#	750	25.5	3	42.5x45x30
1000	2.5	255RMB102K#	750	26.5	2.8	42.5x45x33
1000	3	305PMB102K#	500	32.5	2.1	57.5x50x35
1000	3	305RMB102K#	450	25	3.1	57.5x45x30
1000	3.3	335PMB102K#	1650	34.5	2	57.5x50x35
1000	3.3	335RMB102K#	450	26.5	3	57.5x45x30
1000	4	405RMB102K#	450	29.5	2.7	57.5x50x35
1000	4.7	475PMB102K#	500	34	1.7	57.5x57.5x38
1000	4.7	475RMB102K#	450	31.5	2.6	57.5x50x35
1000	5.6	565RMB102K#	450	33.5	2.4	57.5x57.5x38
1000	6	605RMB102K#	450	34.5	2.3	57.5x57.5x38
1200	0.33	334PMB122K#P2	1000	12.5	5.1	42.5x27.5x24.5
1200	0.33	334PMB122KB#	1000	12	5.1	42.5x28x17
1200	0.39	394PMB122K#P2	1000	14	4.6	42.5x27.5x24.5
1200	0.39	394PMB122KB#	1000	13.5	4.6	42.5x28x17
1200	0.47	474PMB122K#P2	1000	15	4.1	42.5x27.5x24.5
1200	0.47	474PMB122KA#	1000	15	4.1	42.5x32x17
1200	0.47	474RMB122K#	870	12.5	5.6	42.5x28x17
1200	0.56	564PMB122K#P2	1000	16	3.7	42.5x27.5x24.5
1200	0.68	684PMB122K#P1	1000	20	3.3	42.5x35.5x33.5
1200	0.68	684PMB122KA#	1000	20	3.3	42.5x33.5x22
1200	0.68	684RMB122K#	870	15	4.6	42.5x30x22
1200	0.82	824PMB122K#P1	1000	21	3	42.5x35.5x33.5
1200	1	105PMB122K#P1	1000	22.5	2.7	42.5x35.5x33.5
1200	1	105PMB122KA#	1000	23.5	2.7	42.5x37x28
1200	1.2	125PMB122K#P0	1200	25	2.4	42.5x45x33
1200	1.2	125PMB122KA#	1000	26	2.4	42.5x45x30
1200	1.2	125RMB122K#	870	20.5	3.6	42.5x35.5x33.5
1200	1.2	125RMB122K#	1000	25	2.4	42.5x35.5x33.5
1200	1.2	125RMB122KA#	870	21	3.6	42.5x37x28
1200	1.5	155PMB122K#P0	1000	28.5	2.1	42.5x45x33
1200	1.5	155RMB122K#	870	22	3.2	42.5x35.5x33.5
1200	2	205PMB122K#	575	28.5	2.4	57.5x45x30
1200	2	205RMB122K#	870	26.5	2.9	42.5x45x33
1200	2	205RMB122KA#	870	26.5	2.9	42.5x45x30
1200	2.2	225PMB122K#	575	31.5	2.3	57.5x50x35
1200	2.2	225RMB122K#	500	24	3.6	57.5x45x30

Americas / EU
Phone: 1-508-996-8561
Email: cdena@cde.com

CDE ENERGIZING IDEAS CORNELL DUBILIER
ILLINOIS CAPACITOR

Asia
Phone: 852-2793-0931
Email: cdeasia@cde.com

PMB_RMB

Metallized Polypropylene, Power Semiconductor Direct Mount Snubber Lug terminals

WVDC	Capacitance (µF)	IC PART NUMBER	dv/dt (v/µ sec.)	Maximum RMS Ripple Current (A) 100 kHz, +70°C	Typical ESR (mΩ) 100 kHz, +25°C	Dims LxHxT (mm)
1200	2.5	255PMB122K#	575	34	2.1	57.5x50x35
1200	2.5	255RMB122K#	500	26	3.4	57.5x45x30
1200	3	305RMB122K#	500	28	3	57.5x50x35
1200	3.3	335PMB122K#	575	37.5	1.9	57.5x57.5x38
1200	3.3	335RMB122K#	500	29.5	2.9	57.5x50x35
1200	3.5	355PMB122K#	575	38.5	1.9	57.5x57.5x38
1200	4	405RMB122K#	500	31	2.5	57.5x57.5x38
1200	4.7	475RMB122K#	500	34	2.3	57.5x57.5x38
1500	0.22	224PMB152K#	1220	12	6.1	42.5x28x17
1500	0.33	334PMB152K#P2	1220	14	4.6	42.5x27.5x24.5
1500	0.33	334PMB152KA#	1220	14.5	4.6	42x32x17
1500	0.39	394PMB152K#	1000	11.6	6.6	42.5x28x17
1500	0.39	394PMB152K#P2	1220	16	4.2	42.5x27.5x24.5
1500	0.47	474PMB152K#P1	1220	18.5	3.7	42.5x35.5x33.5
1500	0.47	474PMB152KA#	1220	18.5	3.7	42.5x33.5x22
1500	0.47	474RMB152K#	1000	13.5	5.8	42x32x14
1500	0.56	564RMB152K#	1000	14.5	5.1	42.5x30x22
1500	0.56	564RMB152KA#	1000	14.5	5.1	42.5x27.5x24.5
1500	0.68	684PMB152K#P1	1220	21.5	3.1	42.5x35.5x33.5
1500	0.68	684PMB152KA#	1220	22	3.1	42.5x37x28
1500	0.68	684RMB152K#	1000	15.5	4.7	42.5x33.5x22
1500	0.75	754PMB152K#P1	1220	23	2.8	42.5x35.5x33.5
1500	1	105PMB152K#P0	1220	26.5	2.5	42.5x45x33
1500	1	105RMB152K#	1000	19.5	4	42.5x37x28
1500	1.2	125PMB152K#	870	26.5	2.8	57.5x45x30
1500	1.2	125RMB152K#	1200	23.5	3.5	42.5x45x30
1500	1.5	155PMB152K#	725	30	2.5	57.5x50x35
1500	1.5	155RMB152K#	1000	25.5	3.2	42.5x45x33
1500	1.8	185PMB152K#	725	32	2.3	57.5x50x35
1500	2	205RMB152K#	575	24.5	3.5	57.5x45x30
1500	2.2	225PMB152K#	725	34.5	2.2	57.5x57.5x38
1500	2.2	225RMB152K#	575	26.5	3.4	57.5x50x35
1500	2.5	255RMB152K#	575	28.5	3.2	57.5x50x35
1500	3	305RMB152K#	575	30	2.9	57.5x57.5x38
1500	3.3	335RMB152K#	575	31.5	2.8	57.5x57.5x38
2000	0.1	104PMB202K#	1600	8.5	12.5	42.5x28x17
2000	0.1	104PMB202K#P2	1600	8.5	12.5	42.5x27.5x24.5
2000	0.15	154PMB202K#P2	1600	11	7.4	42.5x27.5x24.5
2000	0.15	154PMB202KA#	1600	11	7.4	42.5x28x14
2000	0.22	224PMB202K#P2	1600	14	5.1	42.5x27.5x24.5
2000	0.22	224PMB202KA#	1600	14	5.1	42x32x17
2000	0.22	224RMB202K#	1220	10.5	8.8	42.5x28x17
2000	0.33	334PMB202K#P1	1600	18	4.1	42.5x35.5x33.5
2000	0.33	334RMB202K#	1220	13	6.6	42.5x27.5x24.5
2000	0.39	394PMB202K#P1	1000	20.5	3.7	42.5x35.5x33.5
2000	0.39	394PMB202KA#	1600	20.5	3.7	42.5x37x28
2000	0.39	394PMB252K#	2050	23.5	3.4	42.5x45x30
2000	0.39	394RMB202K#	1220	14	6.1	42.5x33.5x22
2000	0.47	474PMB202K#P0	1600	22	3.3	42.5x45x33
2000	0.47	474PMB202KA#	1600	22	3.3	42.5x45x30
2000	0.47	474RMB202K#	1220	16.5	5.3	42.5x35.5x33.5
2000	0.56	564PMB202K#P0	1600	24.5	3	42.5x45x33
2000	0.56	564PMB202KA#	1600	24.5	3	42.5x45x30
2000	0.56	564RMB202K#	1220	17.5	4.9	42.5x37x28

WVDC	Capacitance (µF)	IC PART NUMBER	dv/dt (v/µ sec.)	Maximum RMS Ripple Current (A) 100 kHz, +70°C	Typical ESR (mΩ) 100 kHz, +25°C	Dims LxHxT (mm)
2000	0.68	684PMB202K#	930	23	3.5	57.5x45x30
2000	0.68	684RMB202K#	1220	18.5	4.6	42.5x35.5x33.5
2000	0.82	824PMB202K#	930	24.5	3.1	57.5x45x30
2000	0.82	824RMB202KA#	1220	21.5	4.1	42.5x45x33
2000	1	105PMB202K#	930	28	2.8	57.5x50x35
2000	1	105RMB202K#	1220	23.5	3.7	42.5x45x33
2000	1.2	125PMB202K#	930	31.5	2.5	57.5x50x35
2000	1.2	125RMB202K#	725	23	4	57.5x45x30
2000	1.5	155PMB202K#	930	35	2.2	57.5x57.5x38
2000	1.5	155RMB202K#	725	26.5	3.6	57.5x50x35
2000	2.2	225RMB202K#	725	30.5	3	57.5x57.5x38
2500	0.1	104PMB252K#P2	2050	9	11	42.5x27.5x24.5
2500	0.1	104PMB252KB#	2050	9	11	42.5x28x17
2500	0.15	154PMB252K#P2	2050	12	7.1	42.5x27.5x24.5
2500	0.15	154RMB252K#	1600	9.5	10.7	42.5x28x14
2500	0.22	224PMB252K#P1	2050	16	5.2	42.5x35.5x33.5
2500	0.22	224RMB252K#	1600	11.5	7.3	42x32x17
2500	0.22	224RMB252KA#	1600	11.5	7.3	42.5x27.5x24.5
2500	0.27	274PMB252K#	2050	18	4.5	42.5x37x28
2500	0.27	274RMB252K#	1600	13.5	6.1	42.5x33.5x22
2500	0.33	334PMB252K#P1	2050	19	3.8	42.5x35.5x33.5
2500	0.47	474PMB252K#P0	2050	26	3.1	42.5x45x33
2500	0.47	474RMB252K#	1600	19.5	4.7	42.5x45x30
2500	0.56	564PMB252K#	1150	23.5	3.5	57.5x45x30
2500	0.68	684PMB252K#	1150	26	3.2	57.5x50x35
2500	0.68	684RMB252K#	930	20	5	57.5x45x30
2500	0.82	824PMB252K#	1150	29	2.9	57.5x50x35
2500	0.82	824RMB252K#	930	22	4.5	57.5x45x30
2500	1	105PMB252K#	1150	32	2.7	57.5x57.5x38
2500	1	105RMB252K#	930	24	4.1	57.5x50x35
2500	1.2	125RMB252K#	930	26	3.6	57.5x50x35
2500	1.5	155RMB252K#	930	30	3.2	57.5x57.5x38
3000	0.047	473PMB302K#P2	2500	7.5	16.5	42.5x27.5x24.5
3000	0.047	473PMB303KB#	2500	7	16.5	42.5x28x17
3000	0.068	683PMB302K#P2	2500	9	11.5	42.5x27.5x24.5
3000	0.1	104PMB302K#P1	2500	12.5	8.5	42.5x35.5x33.5
3000	0.1	104PMB302KA#	2500	12.5	8.5	42.5x30x22
3000	0.1	104RMB302K#	2050	7.5	11.5	42.5x28x17
3000	0.15	154PMB302K#P1	2500	15.5	5.9	42.5x35.5x33.5
3000	0.15	154PMB302KA#	2500	15.5	5.9	42.5x37x28
3000	0.15	154RMB302K#	2050	10.5	10.2	42.5x30x22
3000	0.22	224PMB302K#P0	2500	21	4.3	42.5x45x33
3000	0.22	224RMB302K#	2050	14.5	7.3	42.5x35.5x33.5
3000	0.22	224RMB302K#	2050	14.5	7.3	42.5x35.5x33.5
3000	0.22	224RMB302KA#	2050	14.5	7.3	42.5x37x28
3000	0.33	334PMB302K#	1400	21.5	4.3	57.5x45x30
3000	0.33	334RMB302K#	2050	17	5.4	42.5x35.5x33.5
3000	0.47	474PMB302K#	1400	26	3.8	57.5x50x35
3000	0.47	474RMB302K#	2050	21.5	4.3	42.5x45x33
3000	0.56	564PMB302K#	1400	29	3.5	57.5x57.5x38
3000	0.68	684PMB302KB#	2500	9	11.5	42.5x28x14
3000	0.68	684RMB302K#	1150	22	5.1	57.5x50x35
3000	0.82	824RMB302K#	1150	24.5	4.5	57.5x50x35
3000	1	105RMB302K#	1150	28	3.9	57.5x57.5x38

Americas / EU
Phone: 1-508-996-8561
Email: cdena@cde.com

CDE ENERGIZING IDEAS
CORNELL DUBILIER
ILLINOIS CAPACITOR

Asia
Phone: 852-2793-0931
Email: cdeasia@cde.com

PMC

Metallized Polypropylene Film Capacitors

Direct Mount Snubber, Lug Terminals

FEATURES	High Current – High dvdt – Multiple Lug Styles
APPLICATIONS	Power Semiconductor Module Protection - Resonant circuit – Switching power supplies

Operating Temperature Range	**-40°C to +100°C**						
Capacitance Tolerance	±10% at 1 kHz, 25°C ±5% optional						
Non-Recurrent SVDC	**WVDC**	**250**	**330**	**400**	**600**	**700**	
	VAC	400	500	600	800	1000	
AC voltage (50/60 Hz)	**WVDC**	**250**	**330**	**400**	**600**	**700**	
	VAC	160	220	275	350	400	
	For T>+85°C , The voltage (DC/AC)must be decreased by (1.5/2.5)% per °C						
Dissipation Factor (MAX) 25°C	**Frequency (kHz)**	**C≤5uF**	**5<C≤25uF**	**C>25uF**			
	1	0.05%	0.08%	0.1%			
Insulation Resistance @25°C (<70% RH)for 1 minute at 100VDC applied	**Insulation Resistance**						
	3000 MΩxuF (not to exceed 30GΩ)						
Self Inductance	<1 nano-Henry per mm of lead spacing						
Capacitance Drift Factor	<0.5% after 2 years at 40°C						
Life Expectancy	100000 Hours @WVDC 30000 Hours @ VAC						
	Capacitance Change	≤3% of initially measured value					
Failure quota	300/ Billion component hours						
Damp Heat test	**56 days at40°C with 90 to 95%RH, +40°C and no voltage applied**						
	Capacitance Change	≤2% of initially measured value					
	Dissipation Factor	≤0.001 at 1kHz and 25°C					
	Insulation Resistance	≥50% of maximum specified value					
Self Inductance	<1 nano-Henry per mm of lead spacing						
Capacitance Drift Factor	<0.5% after 2 years at 40°C						
Capacitance Temperature Coefficient	-200 ppm/°C, ±100ppm/°C						
Dielectric Strength	**Terminal to Terminal**	**Terminal to case**					
	160% of rated VDC or 150% VAC applied for 2 Seconds and 25°C	3kVAC @ 50/60 Hz applied between terminals and case for 60 seconds at 25°C					
Dielectric	Polypropylene						
Construction	Metallized film						
Coating	Flame Retardant plastic box with epoxy resin (UL94V-0)						
Leads	Lead free tinned copper leads						

Americas / EU
Phone: 1-508-996-8561
Email: cdena@cde.com

CDE CORNELL DUBILIER
ENERGIZING IDEAS
ILLINOIS CAPACITOR

Asia
Phone: 852-2793-0931
Email: cdeasia@cde.com

PMC

Metallized Polypropylene Film Capacitors

Direct Mount Snubber, Lug Terminals

STYLE S, SM8, T ,TM8

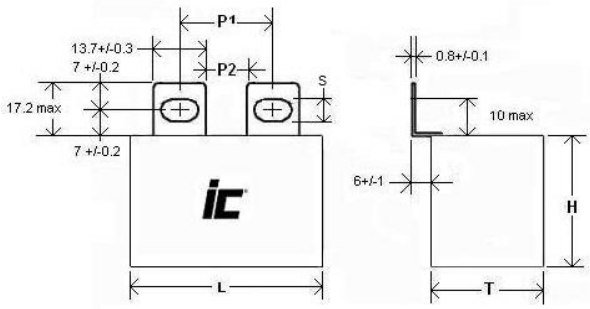

STYLE L

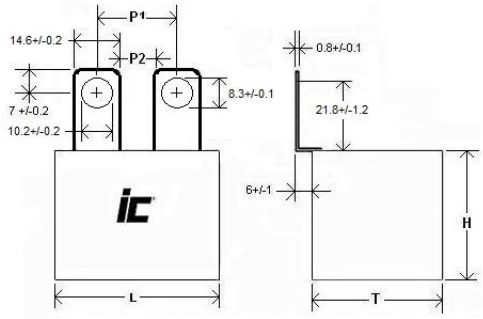

STYLE E

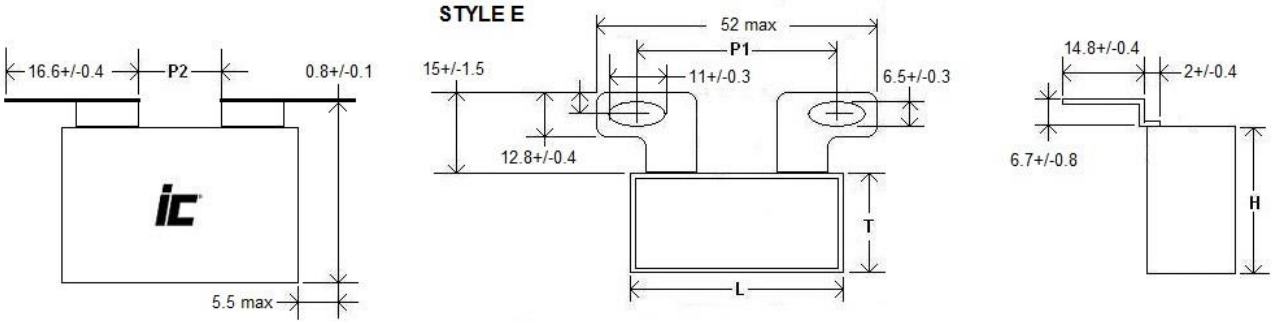

Style B

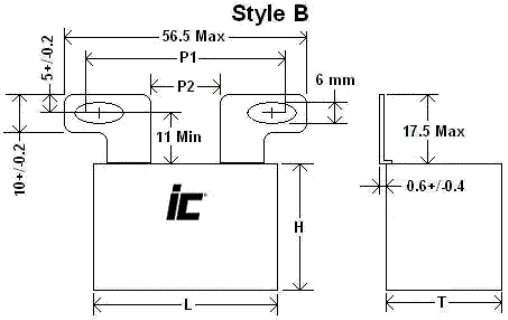

Style F, FM8, G, GM8

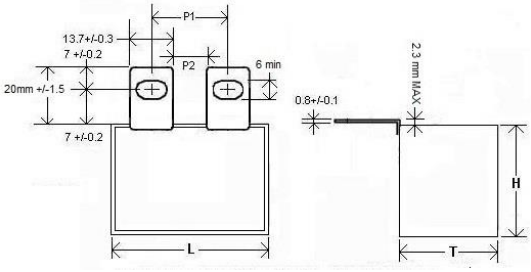

Fixing pitch and distance between lugs (mm)				
Lugs	L	P1	P2	S
S,V,F	42 - 42.5	23 - 28	11	6
	57.5	37 - 42	24	6
SM8,VM8, FM8	42 - 42.5	25 – 26	11	8
	57.5	39 - 40	24	8
T,W,G	42 - 42.5	20 – 25	8	6
	57.5	34 – 39	21	6
TM8,WM8,GM8	42 - 42.5	22 – 23	8	8
	57.5	36 – 37	21	8
N,P	57.5	23 – 28	11	6
NM8, PM8	57.5	25 - 26	11	8
A	42 - 42.5	51 – 64	----	8
	57.5	65 – 78	---	8
B	42 - 42.5	32 – 45	17	6
E	42 - 42.5	30 - 37	15	6
L	42 - 42.5	22 - 24	8	6
	57.5	36 - 38	21	8

Americas / EU
Phone: 1-508-996-8561
Email: cdena@cde.com

CDE ENERGIZING IDEAS
CORNELL DUBILIER
ILLINOIS CAPACITOR

Asia
Phone: 852-2793-0931
Email: cdeasia@cde.com

PMC

Metallized Polypropylene Film Capacitors

Direct Mount Snubber, Lug Terminals

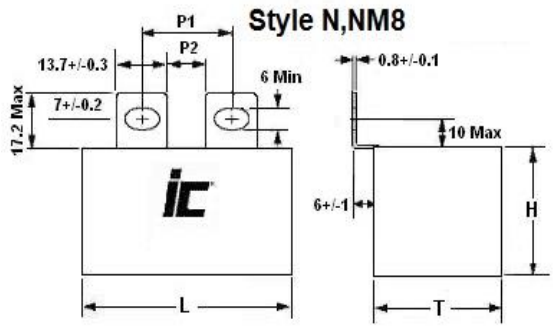

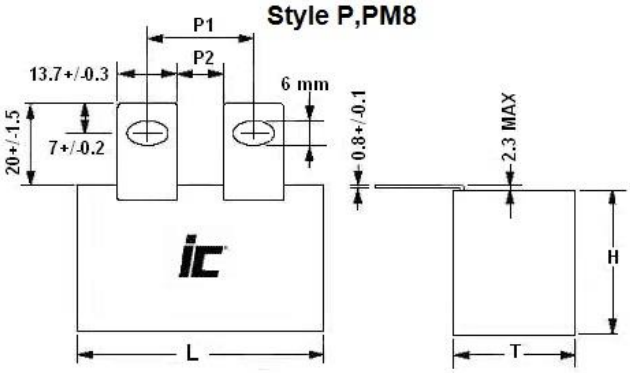

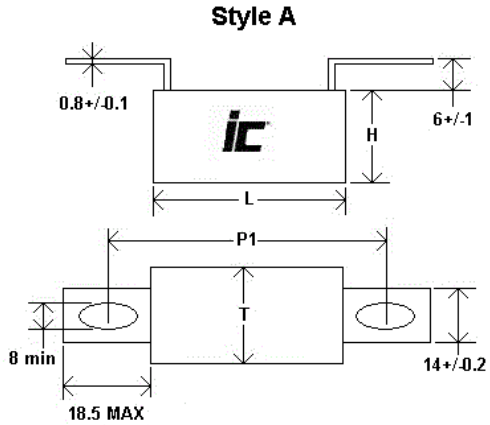

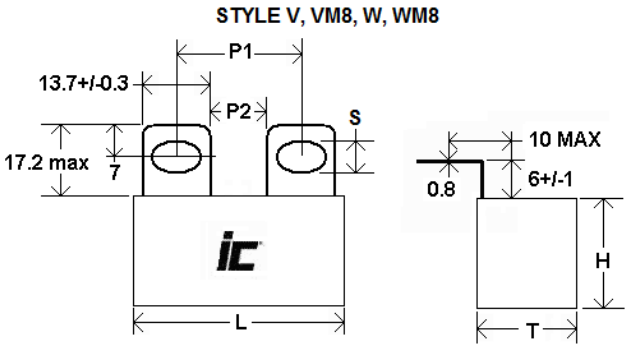

Americas / EU
Phone: 1-508-996-8561
Email: cdena@cde.com

CDE CORNELL DUBILIER
ENERGIZING IDEAS
ILLINOIS CAPACITOR

Asia
Phone: 852-2793-0931
Email: cdeasia@cde.com

PMC

High Current with Lug Terminals

WVDC	Capacitance (µF)	IC PART NUMBER	dv/dt (v/µ sec.)	Maximum RMS Ripple Current (A) 100 kHz, +70°C	Typical ESR (mΩ) 100 kHz, +25°C	Dims LxHxT (mm)
250	10	106PMC250K#P2	25	18	2.7	42.5x27.5x24.5
250	15	156PMC250K#P1	25	23.5	2.3	42.5x35.5x33.5
250	20	206PMC250K#P1	25	27	2	42.5x35.5x33.5
250	22	226PMC250K#	25	27.5	1.8	42.5x35.5x33.5
250	25	256PMC250K#P1	25	28.5	1.9	42.5x35.5x33.5
250	30	306PMC250K#P0	25	30	1.8	42.5x45x33
250	33	336PMC250K#	25	31	1.7	42.5x45x33
250	35	356PMC250K#P0	25	32	1.7	42.5x45x33
250	50	506PMC250K#	15	32.5	2.2	57.5x50x35
250	60	606PMC250K#	15	34.5	2	57.5x50x35
330	6.8	685PMC330K#	30	18.5	2.8	42.5x27.5x24.5
330	15	156PMC330K#	30	26.5	2	42.5x35.5x33.5
330	20	206PMC330K#	30	29.5	1.8	42.5x45x33
330	22	226PMC330K#	30	30.5	1.7	42.5x45x33
330	25	256PMC330K#	17	26.5	2.7	57.5x45x30
330	30	306PMC330K#	17	27.5	2.5	57.5x45x30
330	35	356PMC330K#	17	31	2.3	57.5x50x35
330	40	406PMC330K#	17	32.5	2.1	57.5x50x35
400	4	405PMC400K#P2	40	16.5	3.4	42.5x27.5x24.5
400	5	505PMC400K#P2	40	18.5	2.9	42.5x27.5x24.5
400	6.8	685PMC400K#P1	40	23	2.5	42.5x35.5x33.5
400	10	106PMC400K#P1	40	26.5	2.1	42.5x35.5x33.5
400	12.5	126PMC400K#P0	40	29.5	2	42.5x45x33
400	15	156PMC400K#P0	40	31.5	1.9	42.5x45x33
400	20	206PMC400K#	20	26.5	2.9	57.5x45x30

WVDC	Capacitance (µF)	IC PART NUMBER	dv/dt (v/µ sec.)	Maximum RMS Ripple Current (A) 100 kHz, +70°C	Typical ESR (mΩ) 100 kHz, +25°C	Dims LxHxT (mm)
400	22	226PMC400K#	20	29	2.7	57.5x50x35
400	25	256PMC400K#	20	30.5	2.6	57.5x50x35
600	2.5	255PMC600K#P2	55	16	4	42.5x27.5x24.5
600	3	305PMC600K#P2	55	17	3.6	42.5x27.5x24.5
600	3.3	335PMC600K#	55	17	3.3	42.5x27.5x24.5
600	4	405PMC600K#P1	55	21.5	2.8	42.5x35.5x33.5
600	4.7	475PMC600K#	55	24	2.4	42.5x35.5x33.5
600	5	505PMC600K#P1	55	24	2.5	42.5x35.5x33.5
600	6.8	685PMC600K#P0	55	28.5	2.2	42.5x45x33
600	9	905PMC600K#P0	55	31.5	1.9	42.5x45x33
600	10	106PMC600K#	30	23.5	3.5	57.5x45x30
600	12.5	126PMC600K#	30	26	3.2	57.5x50x35
600	15	156PMC600K#	30	28.5	2.9	57.5x50x35
700	1.5	155PMC700K#P2	70	14.5	4.8	42.5x27.5x24.5
700	2	205PMC700K#P2	70	16.5	4	42.5x27.5x24.5
700	2.5	255PMC700K#P1	70	19.5	3.4	42.5x35.5x33.5
700	3	305PMC700K#P1	70	21.5	3.1	42.5x35.5x33.5
700	3.3	335PMC700K#	70	22	2.9	42.5x35.5x33.5
700	4	405PMC700K#P0	70	26	2.6	42.5x45x33
700	4.7	475PMC700K#	70	27	2.2	42.5x45x33
700	5	505PMC700K#P0	70	29	2.3	42.5x45x33
700	6.8	685PMC700K#	40	22.5	3.8	57.5x45x30
700	8	805PMC700K#	40	25.5	3.5	57.5x50x35
700	9	905PMC700K#	40	27	3.2	57.5x50x35

Type SCC, Dual IGBT Clamp-Snubber Modules

High Peak Current Snubber with Integrated Hyperfast Diodes

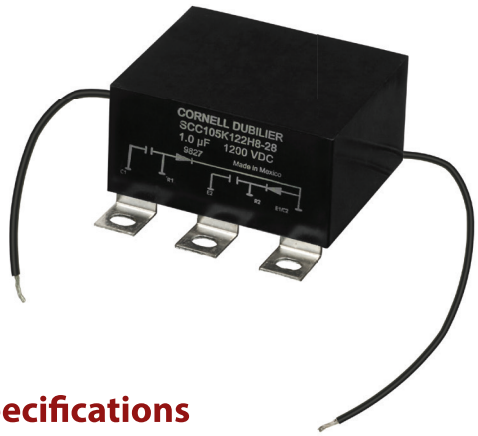

Style SCC is ideal for use in medium to high current applications where a dual IGBT module is used. This low loss snubber directly reduces turn-off voltage overshoots and is effective in reducing turn-on voltage transients.

Highlights

- Mount directly to the IGBT module
- Low inductance
- Low loss polypropylene dielectric
- High peak current
- Hyperfast diodes integrated into package
- Wire taps for connecting external resistors
- Flame resistant case and epoxy meet UL 94V-O

Specifications

Capacitance Range	0.47 to 2.0 µF
Capacitance Tolerance	±10% (K) standard, ±5% (J) optional
Rated Voltage	600 to 1200 Vdc
Operating Temperature Range	-55 ºC to 70 ºC
RoHS Compliant	

Dimensions

Construction Details	
Case Material	Plastic UL94V-0
Resin Material	Dry Resin UL94V-0
Terminal Material	Tin Plated Copper

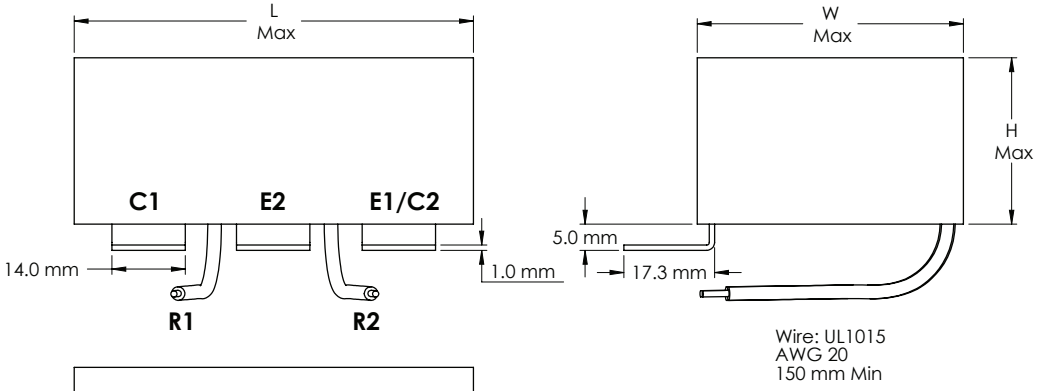

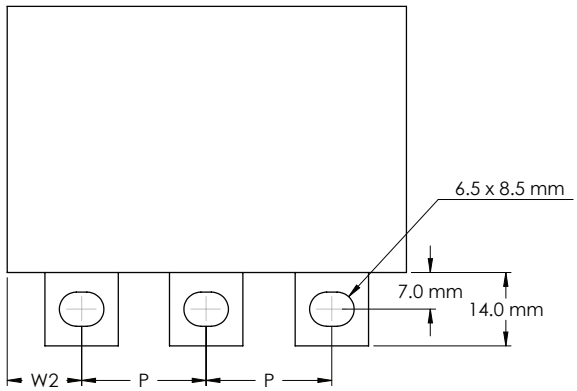

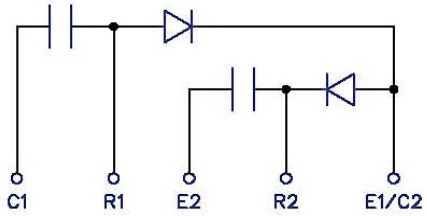

Type SCC, Dual IGBT Clamp-Snubber Modules

High Peak Current Snubber with Integrated Hyperfast Diodes

Part Numbering System

SCC	105	K	122	H1	24	–F
Series Type Designation	Capacitance in pF	Tolerance Code	Voltage	Diode Rating	Lug Spacing	RoHS Compliant Indicator
	104 = 0.1 µF 105 = 1 µF	J = ±5% K = ±10%	601 = 600 Vdc 122 = 1200 Vdc	See Tables	24 = 24 mm 28 = 28 mm	

Ratings

Note: Other ratings, sizes and performance specification available upon request. Contact us.

Catalog Part Number	Cap (µF)	Typical Application DUAL IGBT Ic/Vce	Diode Characteristics Vrrm/If/trr(µs)	Ipk(A) Surge Tc = 25 °C	Ipk(A) Tc = 25 °C Repetitive 20 kHz Sq Wave	W (mm)	L (mm)	H (mm)	W2 (mm)	P (mm)
SCC105K601H7-24-F	1.00	100/600	600/30/.040	300	70	50.80	76.20	31.75	14.22	24
SCC155K601H7-24-F	1.50	200-300/600	600/30/.040	300	70	50.80	76.20	31.75	14.22	24
SCC205K601H5-24-F	2.00	400/600	600/50/.045	500	100	50.80	76.20	31.75	14.22	24
SCC205K601H5-28-F	2.00	400/600	600/50/.045	500	100	50.80	76.20	31.75	10.16	28
SCC474K122H8-24-F	0.47	100/1200	1200/30/.065	300	60	50.80	76.20	31.75	14.22	24
SCC474K122H8-28-F	0.47	100/1200	1200/30/.065	300	60	50.80	76.20	31.75	10.16	28
SCC105K122H8-24-F	1.00	150/1200	1200/30/.065	300	60	62.90	76.20	38.10	14.22	24
SCC105K122H8-28-F	1.00	150/1200	1200/30/.065	300	60	62.90	76.20	38.10	10.16	28
SCC155K122H4-24-F	1.50	200/1200	1200/50/.085	500	100	63.50	88.90	40.00	20.60	24
SCC155K122H4-28-F	1.50	200/1200	1200/50/.085	500	100	63.50	88.90	40.00	16.50	28
SCC205K122H4-24-F	2.00	300/1200	1200/50/.085	500	100	71.12	92.08	43.18	20.60	24
SCC205K122H4-28-F	2.00	300/1200	1200/50/.085	500	100	71.12	92.08	43.18	18.03	28

Notice and Disclaimer: All product drawings, descriptions, specifications, statements, information and data (collectively, the "Information") in this datasheet or other publication are subject to change. The customer is responsible for checking, confirming and verifying the extent to which the Information contained in this datasheet or other publication is applicable to an order at the time the order is placed. All Information given herein is believed to be accurate and reliable, but it is presented without any guarantee, warranty, representation or responsibility of any kind, expressed or implied. Statements of suitability for certain applications are based on the knowledge that the Cornell Dubilier company providing such statements ("Cornell Dubilier") has of operating conditions that such Cornell Dubilier company regards as typical for such applications, but are not intended to constitute any guarantee, warranty or representation regarding any such matter – and Cornell Dubilier specifically and expressly disclaims any guarantee, warranty or representation concerning the suitability for a specific customer application, use, storage, transportation, or operating environment. The Information is intended for use only by customers who have the requisite experience and capability to determine the correct products for their application. Any technical advice inferred from this Information or otherwise provided by Cornell Dubilier with reference to the use of any Cornell Dubilier products is given gratis (unless otherwise specified by Cornell Dubilier), and Cornell Dubilier assumes no obligation or liability for the advice given or results obtained. Although Cornell Dubilier strives to apply the most stringent quality and safety standards regarding the design and manufacturing of its products, in light of the current state of the art, isolated component failures may still occur. Accordingly, customer applications which require a high degree of reliability or safety should employ suitable designs or other safeguards (such as installation of protective circuitry or redundancies or other appropriate protective measures) in order to ensure that the failure of an electrical component does not result in a risk of personal injury or property damage. Although all product-related warnings, cautions and notes must be observed, the customer should not assume that all safety measures are indicated in such warnings, cautions and notes, or that other safety measures may not be required.

Type SCD IGBT Snubber Capacitor Modules

High dV/dt Direct Mount IGBT Snubber

Style SCD offers protection against voltage transients in low to medium current IGBT applications where high dV/dt is encountered. Connect these capacitors from C1 to E2 on a dual IGBT module or from P to N on a six-pack module to eliminate severe voltage transients. Parts ending with Z25 fit IGBTs with 23mm, 25mm and 28mm lead spacing. If you have a preferred lead spacing, please specify.

Highlights

- High peak & RMS current capability
- Mount directly to the IGBT module
- Low inductance
- Low loss polypropylene dielectric
- Self healing
- Other terminal spacing and capacitance values available.
- We can build to your specs!
- 85 °C ambient temperature

Specifications

Capacitance Range	0.22 to 4.7 µF
Capacitance Tolerance	±10% (K) standard, ±5% (J) optional
Rated Voltage	600 to 2000 Vdc
Operating Temperature Range	-55 ºC to 85 ºC
Maximum rms Current	Check tables for values
Test Voltage between Terminals @ 25ºC	160% rated DC voltage for 60 s
Test Voltage between Terminals & Case @ 25ºC	3 kVac @ 50/60 Hz for 60 s
Life Test	2000 h @ 85 ºC, 125% rated DC voltage
Life Expectancy	60,000 h @ rated Vdc, 70 ºC 30,000 h @ rated Vac, 70 ºC
RoHS Compliant	

Dimensions

Construction Details	
Case Material	Plastic UL94V-0
Resin Material	Dry Resin UL94V-0
Terminal Material	Tin Plated Copper

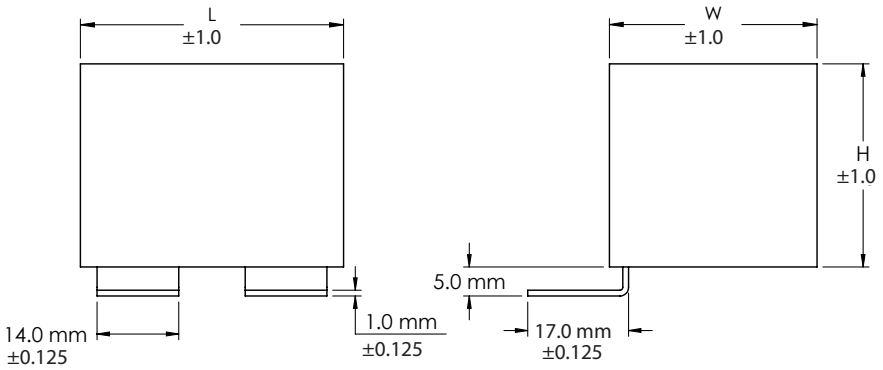

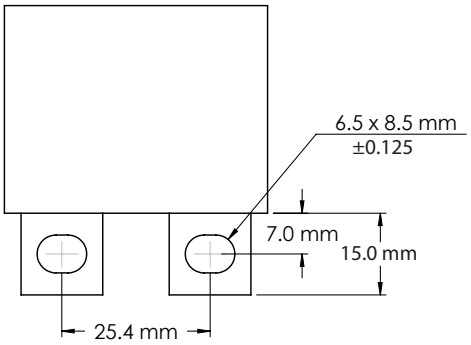

Tolerances: ±0.5mm unless otherwise specified

Type SCD IGBT Snubber Capacitor Modules

High dV/dt Direct Mount IGBT Snubber

Mounting Across the Bus?

CDE Will Accommodate Your Bus Structure

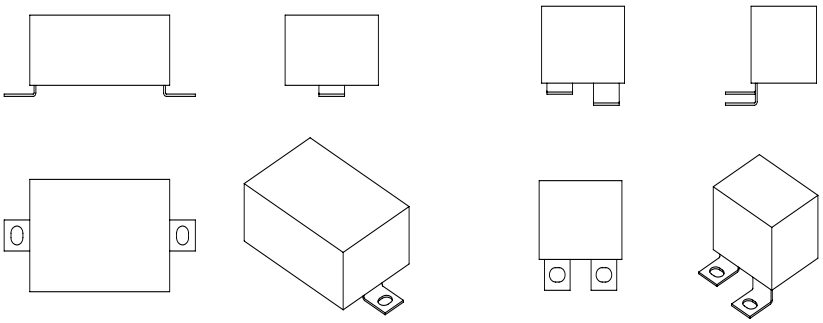

Dual Snubber Assembly Option

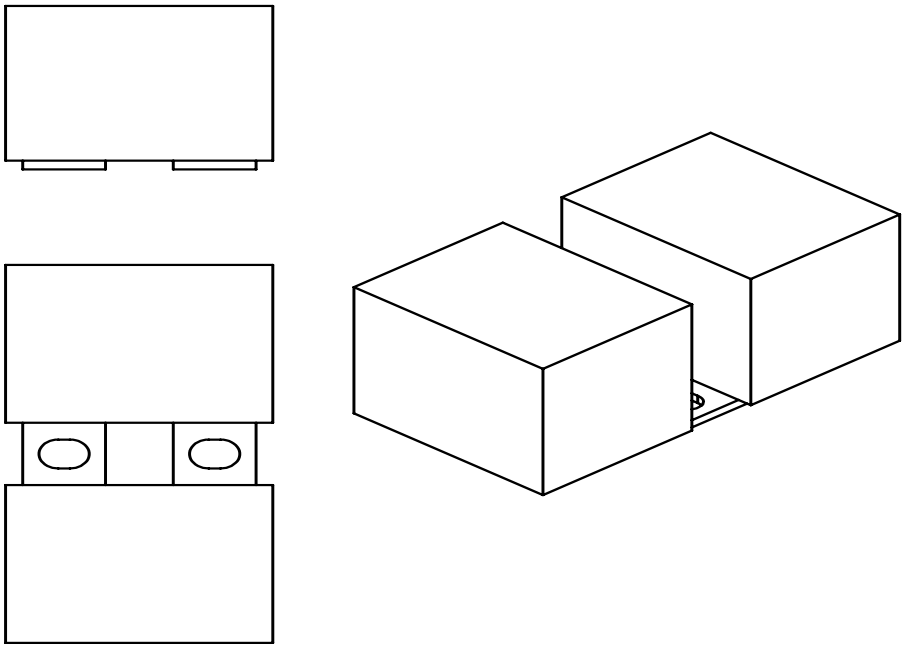

Part Numbering System

SCD	105	K	122	A	3	-	25	–F
Series Type Designation	Capacitance in pF	Tolerance Code	Voltage	Internal Assembly Code	Type of Section to be used	Lug Configuration	Lug Spacing	RoHS Compliant Indicator
	104 = 0.1 µF	J = ±5%	601 = 600 Vdc			Z = Standard	22 = 22 mm	
	105 = 1 µF	K = ±10%	122 = 1200 Vdc			25.4 mm C-C	24 = 24 mm	
	225 = 2.2 µF		202 = 2000 Vdc				25 = 25 mm	
							28 = 28 mm	
							29 = 29 mm	

Type SCD IGBT Snubber Capacitor Modules

High dV/dt Direct Mount IGBT Snubber

Ratings

Note: Other ratings, sizes and performance specification available upon request. Contact us.

Catalog Part Number	Cap. (µF)	Volts (Vdc)	Volts 60 Hz (Vac)	dV/dt (V/µs)	Ipk (A)	ESR (mΩ)	Irms 100 kHz 55 °C (Arms)	W (mm)	L (mm)	H (mm)
600 Vdc										
SCD474K601A3Z25-F	0.47	600	275	250	118	9	9.2	24.6	47.0	24.1
SCD684K601A3Z25-F	0.68	600	275	250	170	7	11.5	29.0	47.0	26.7
SCD105K601A3Z25-F	1.00	600	275	200	200	5	14.0	29.0	47.0	26.7
SCD155K601A3Z25-F	1.50	600	275	150	225	4	17.1	29.0	47.0	26.7
SCD205K601A3Z25-F	2.00	600	275	150	300	3	20.7	32.3	45.1	35.6
SCD335K601A3Z25-F	3.30	600	400	300	825	5	35.0	38.1	52.1	38.1
SCD475K601A3Z25-F	4.70	600	400	250	1175	4	46.2	46.4	56.5	50.2
1000 Vdc										
SCD474K102A3Z25-F	0.47	1000	275	250	118	11	9.2	24.6	47.0	24.1
SCD474K102D3Z25-F	0.47	1000	500	700	329	8	12.1	29.0	47.0	26.7
SCD684K102A3Z25-F	0.68	1000	275	200	136	7	11.5	29.0	47.0	26.7
SCD684K102D3Z25-F	0.68	1000	500	500	340	7	14.4	29.0	47.0	26.7
SCD105K102A3Z25-F	1.00	1000	275	200	200	4	14.0	29.0	47.0	26.7
SCD105K102D3Z25-F	1.00	1000	500	400	400	5	17.5	29.0	47.0	26.7
SCD155K102A3Z25-F	1.50	1000	275	160	240	4	17.9	32.3	45.1	35.6
SCD155K102D3Z25-F	1.50	1000	500	400	600	3	22.4	34.8	45.1	35.6
SCD205K102A3Z25-F	2.00	1000	275	160	320	4	20.9	34.8	45.1	35.6
SCD205K102D3Z25-F	2.00	1000	500	400	800	5	26.2	38.1	52.1	38.1
1200 Vdc										
SCD224K122A3Z25-F	0.22	1200	500	650	143	19	7.9	24.6	47.0	24.1
SCD334K122A3Z25-F	0.33	1200	500	650	215	13	10.0	29.0	47.0	26.7
SCD474K122A3Z25-F	0.47	1200	500	500	235	10	12.0	29.0	47.0	26.7
SCD684K122A3Z25-F	0.68	1200	500	500	340	7	15.1	32.3	45.1	35.6
SCD105K122A3Z25-F	1.00	1200	500	500	500	5	18.5	34.8	45.1	35.6
SCD155K122A3Z25-F	1.50	1200	500	400	600	4	23.9	38.1	52.1	38.1
SCD205K122A3Z25-F	2.00	1200	500	400	800	4	30.1	46.4	56.5	50.2
SCD305K122C3Z25-F	3.00	1200	500	400	1200	5	39.7	76.2	62.9	38.1
1600 Vdc										
SCD224K162A3Z25-F	0.22	1600	500	650	143	19	7.9	24.6	47.0	24.1
SCD334K162A3Z25-F	0.33	1600	500	650	215	12	10.0	29.0	47.0	26.7
SCD474K162A3Z25-F	0.47	1600	500	650	306	10	12.6	32.3	45.1	35.6
SCD684K162A3Z25-F	0.68	1600	500	650	442	7	15.3	34.8	45.1	35.6
SCD105K162A3Z25-F	1.00	1600	500	500	500	6	19.5	38.1	52.1	38.1
SCD155K162A3Z25-F	1.50	1600	500	400	600	5	25.6	41.9	68.6	38.1
SCD205K162A3Z25-F	2.00	1600	500	400	800	5	30.6	44.5	66.7	46.4
2000 Vdc										
SCD224K202A3Z25-F	0.22	2000	500	800	176	19	8.2	24.6	47.0	24.1
SCD334K202A3Z25-F	0.33	2000	500	800	264	13	10.5	32.3	45.1	35.6
SCD474K202A3Z25-F	0.47	2000	500	600	282	10	13.0	34.3	55.9	30.5
SCD684K202A3Z25-F	0.68	2000	500	600	408	8	16.1	38.1	52.1	38.1
SCD105K202A3Z25-F	1.00	2000	500	600	600	6	21.3	46.4	56.5	50.2

Note: Modify Catalog Part Number to specify lead spacing. Example: 44mm spacing would use –44 instead of Z25. Other capacitance values and lead orientations are available. Contact us.

Notice and Disclaimer: All product drawings, descriptions, specifications, statements, information and data (collectively, the "Information") in this datasheet or other publication are subject to change. The customer is responsible for checking, confirming and verifying the extent to which the Information contained in this datasheet or other publication is applicable to an order at the time the order is placed. All Information given herein is believed to be accurate and reliable, but it is presented without any guarantee, warranty, representation or responsibility of any kind, expressed or implied. Statements of suitability for certain applications are based on the knowledge that the Cornell Dubilier company providing such statements ("Cornell Dubilier") has of operating conditions that such Cornell Dubilier company regards as typical for such applications, but are not intended to constitute any guarantee, warranty or representation regarding any such matter – and Cornell Dubilier specifically and expressly disclaims any guarantee, warranty or representation concerning the suitability for a specific customer application, use, storage, transportation, or operating environment. The Information is intended for use only by customers who have the requisite experience and capability to determine the correct products for their application. Any technical advice inferred from this Information or otherwise provided by Cornell Dubilier with reference to the use of any Cornell Dubilier products is given gratis (unless otherwise specified by Cornell Dubilier), and Cornell Dubilier assumes no obligation or liability for the advice given or results obtained. Although Cornell Dubilier strives to apply the most stringent quality and safety standards regarding the design and manufacturing of its products, in light of the current state of the art, isolated component failures may still occur. Accordingly, customer applications which require a high degree of reliability or safety should employ suitable designs or other safeguards (such as installation of protective circuitry or redundancies or other appropriate protective measures) in order to ensure that the failure of an electrical component does not result in a risk of personal injury or property damage. Although all product-related warnings, cautions and notes must be observed, the customer should not assume that all safety measures are indicated in such warnings, cautions and notes, or that other safety measures may not be required.

Type SCM Single/Dual IGBT Snubber Capacitor Modules

High Peak Current Snubber with Integrated Hyperfast Diode

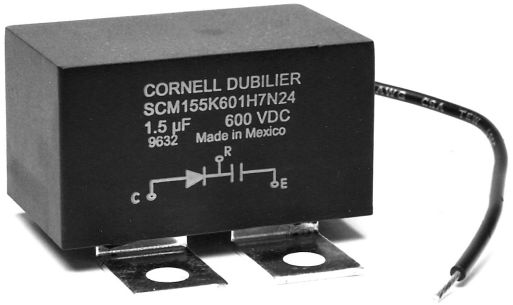

Use style SCM as a discharge restrictive de-coupling to protect dual IGBT modules from overvoltage, Figure 1. Style SCM may also be used as an "N" or "P" type snubber component for a clamp snubber where single IGBT modules are used, figure 2.

Highlights

- Direct mount to the IGBT module
- Low inductance
- Low Loss
- Hyperfast diodes integrated into package
- Self healing
- Other terminal spacing, capacitance values and voltage ratings, also available upon request.

Specifications

Capacitance Range	0.47 to 2.0 µF
Capacitance Tolerance	±10% (K) standard, ±5% (J) optional
Rated Voltage	600 to 1200 Vdc
Operating Temperature Range	-55 ºC to 70 ºC
RoHS Compliant	

Dimensions

Construction Details	
Case Material	Plastic UL94V-0
Resin Material	Dry Resin UL94V-0
Terminal Material	Tin Plated Copper

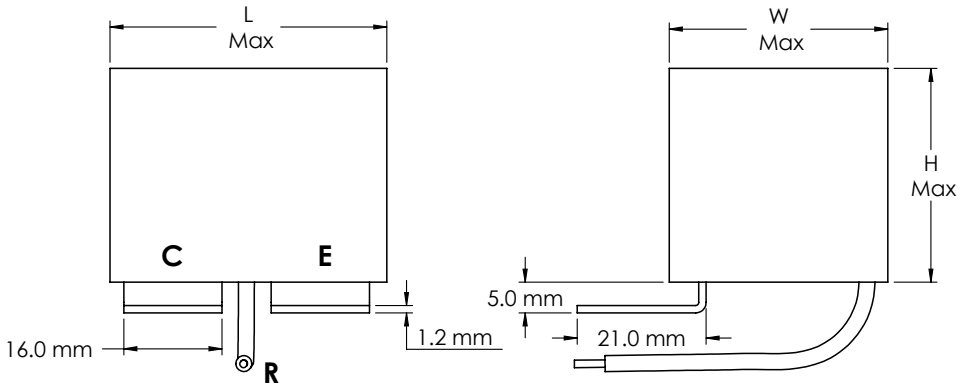

Wire: UL1015
AWG 18
200 mm Min

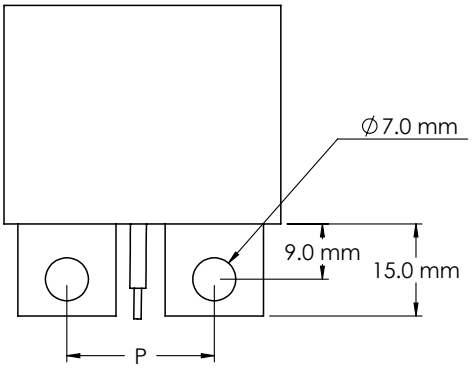

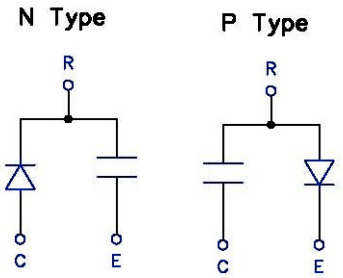

Type SCM Single/Dual IGBT Snubber Capacitor Modules

High Peak Current Snubber with Integrated Hyperfast Diode

Part Numbering System

SCM	105	K	122	H1	N	24	–F
Series Type Designation	Capacitance in pF	Tolerance Code	Voltage	Diode Rating	Polarity	Lug Spacing	RoHS Compliant Indicator
	104=0.1 µF	J = ±5%	601 = 600 Vdc		N or P Type	24=24mm	
	105=1 µF	K = ±10%	122 = 1200 Vdc			28=28mm	
	225=2.2 µF		202 = 2000 Vdc			29=29mm	

Ratings

Note: Other ratings, sizes and performance specification available upon request. Contact us.

		Typical Application IGBT Module				Diode Characteristics					Dimensions			
Catalog Part Number	Cap (µF)	S=Single D=Dual	Ic (A)	Vce (V)	Type	Vrrm (V)	If (A)	Trr (µs)	Ipk surge (A)	Ipk rep (A)	W (mm)	L (mm)	H (mm)	P (mm)
SCM474K601H7N29-F	0.47	S	200–300	600	N	600	30	0.040	300	70	43.82	55.88	34.04	29
SCM474K601H7P29-F	0.47	S	200–300	600	P	600	30	0.040	300	70	43.82	55.88	34.04	29
SCM105K601H7N24-F	1.00	D	100–200	600	N	600	30	0.040	300	70	38.10	47.63	31.75	24
SCM105K601H7P24-F	1.00	D	100–200	600	P	600	30	0.040	300	70	38.10	47.63	31.75	24
SCM105K601H5N29-F	1.00	S	300–400	600	N	600	50	0.045	500	100	46.36	56.52	38.10	29
SCM105K601H5P29-F	1.00	S	300–400	600	P	600	50	0.045	500	100	46.36	56.52	38.10	29
SCM155K601H7N24-F	1.50	D	200–300	600	N	600	30	0.040	300	70	34.29	55.88	30.48	24
SCM155K601H7P24-F	1.50	D	200–300	600	P	600	30	0.040	300	70	38.10	47.63	31.75	24
SCM205K601H5N24-F	2.00	D	300–400	600	N	600	50	0.045	500	100	43.82	55.88	34.04	24
SCM205K601H5P24-F	2.00	D	300–400	600	P	600	50	0.045	500	100	43.82	55.88	34.04	24
SCM205K601H2N29-F	2.00	S	400–600	600	N	600	100	0.050	1000	200	46.36	56.52	38.10	29
SCM205K601H2P29-F	2.00	S	400–600	600	P	600	100	0.050	1000	200	46.36	56.52	38.10	29
SCM474K122H8N29-F	0.47	S	200–300	1200	N	1200	30	0.065	300	60	34.29	55.88	30.48	29
SCM474K122H8P29-F	0.47	S	200–300	1200	P	1200	30	0.065	300	60	38.10	47.63	31.75	29
SCM105K122H8N24-F	1.00	D	100–200	1200	N	1200	30	0.065	300	60	44.45	63.50	37.34	24
SCM105K122H8P24-F	1.00	D	100–200	1200	P	1200	30	0.065	300	60	44.45	63.50	37.34	24
SCM105K122H4N29-F	1.00	S	300–400	1200	N	1200	50	0.085	500	100	43.82	55.88	34.04	29
SCM105K122H4P29-F	1.00	S	300–400	1200	P	1200	50	0.085	500	100	46.36	56.52	38.10	29
SCM155K122H8N24-F	1.50	D	200–300	1200	N	1200	30	0.065	300	60	44.45	63.50	37.34	24
SCM155K122H8P24-F	1.50	D	200–300	1200	P	1200	30	0.065	300	60	46.36	56.52	38.10	24
SCM205K122H4N24-F	2.00	D	300–400	1200	N	1200	50	0.065	500	100	53.98	63.50	43.18	24
SCM205K122H4P24-F	2.00	D	300–400	1200	P	1200	50	0.065	500	100	53.98	63.50	43.18	24
SCM205K122H1N29-F	2.00	S	400–600	1200	N	1200	100	0.090	1000	200	53.98	63.50	43.18	29
SCM205K122H1P29-F	2.00	S	400–600	1200	P	1200	100	0.090	1000	200	53.98	63.50	43.18	29

Ipk surge at 25 °C and Ipk repetitive at 25 °C and 20 kHz.

Type SCM Single/Dual IGBT Snubber Capacitor Modules

High Peak Current Snubber with Integrated Hyperfast Diode

Typical Applications

Discharge Restrictive De-coupling

The circuit in Figure 1 operates on the same principles as the de-coupling capacitor, but only during turn-off switching. As the IGBT turns off, energy trapped in the loop inductance is transferred to the capacitor. The diode blocks oscillations from occurring and excess charge on the capacitor is discharged through the external resistor.

- 1 or 2 wire taps for connecting external resistor
- Flame resistant case and epoxy, meets UL 94V0
- Other terminal pitches and capacitance values available.

RCD Clamp

The function of this snubber is similar to a clamp, Figure 2. At turn-off, the snubber diode is forward biased and the snubber is activated. The energy trapped in the stray inductance is absorbed by the snubber capacitor. During turn-on the snubber caps that were fully charged to bus voltage have a discharge path through the forward biased free-wheel diode, the IGBT, and the snubber resistors. This reduces the reverse recovery voltage transient.

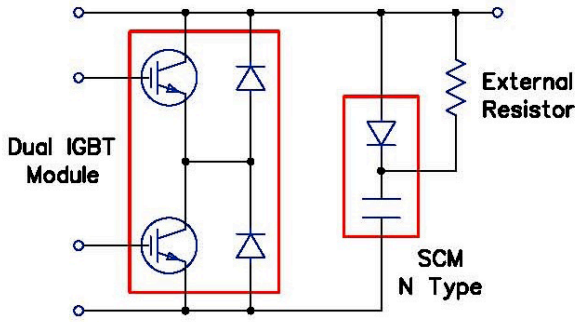

Figure 1
Style SCM Discharge restrictive decoupling used to protect dual IGBT modules

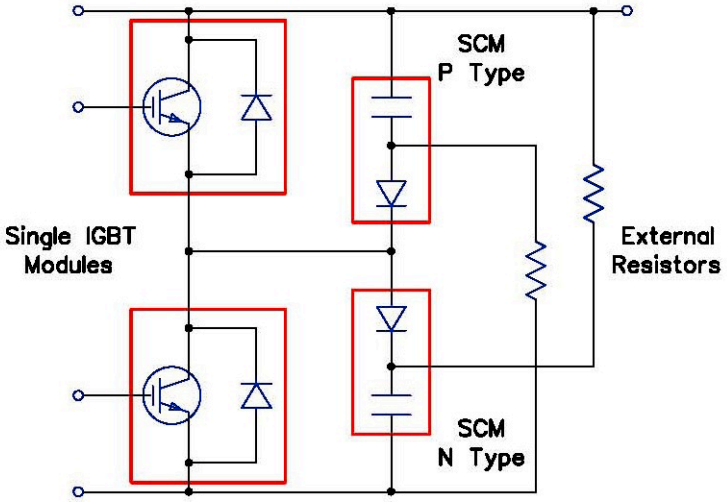

Figure 2
Style SCM "P" type and "N" type used as a clamp to protect an inverter using two "single" IGBT modules

Notice and Disclaimer: All product drawings, descriptions, specifications, statements, information and data (collectively, the "Information") in this datasheet or other publication are subject to change. The customer is responsible for checking, confirming and verifying the extent to which the Information contained in this datasheet or other publication is applicable to an order at the time the order is placed. All Information given herein is believed to be accurate and reliable, but it is presented without any guarantee, warranty, representation or responsibility of any kind, expressed or implied. Statements of suitability for certain applications are based on the knowledge that the Cornell Dubilier company providing such statements ("Cornell Dubilier") has of operating conditions that such Cornell Dubilier company regards as typical for such applications, but are not intended to constitute any guarantee, warranty or representation regarding any such matter – and Cornell Dubilier specifically and expressly disclaims any guarantee, warranty or representation concerning the suitability for a specific customer application, use, storage, transportation, or operating environment. The Information is intended for use only by customers who have the requisite experience and capability to determine the correct products for their application. Any technical advice inferred from this Information or otherwise provided by Cornell Dubilier with reference to the use of any Cornell Dubilier products is given gratis (unless otherwise specified by Cornell Dubilier), and Cornell Dubilier assumes no obligation or liability for the advice given or results obtained. Although Cornell Dubilier strives to apply the most stringent quality and safety standards regarding the design and manufacturing of its products, in light of the current state of the art, isolated component failures may still occur. Accordingly, customer applications which require a high degree of reliability or safety should employ suitable designs or other safeguards (such as installation of protective circuitry or redundancies or other appropriate protective measures) in order to ensure that the failure of an electrical component does not result in a risk of personal injury or property damage. Although all product-related warnings, cautions and notes must be observed, the customer should not assume that all safety measures are indicated in such warnings, cautions and notes, or that other safety measures may not be required.

PHB

Metallized Polypropylene Film Capacitors

for Switching Circuits 2, 4 or 6 Leaded

FEATURES	High Current - High Voltage – Good Pulse Current Rating
APPLICATIONS	Resonant Circuits – Switching Power Supplies – Motor Speed Controls – Induction Heaters

Operating Temperature Range	**-40°C to +100°C**						
Capacitance Tolerance	±10% at 1 kHz, 25°C ±5% optional						
Non-Recurrent SVDC	**WVDC**	**250**	**330**	**400**	**600**	**700**	**850**
	SVDC	400	500	600	800	1000	1200
AC voltage (50/60 Hz)	**WVDC**	**250**	**330**	**400**	**600**	**700**	**850**
	VAC	160	220	275	350	400	500
	For T>+85°C , The voltage (DC/AC)must be decreased by (1.5/2.5)% per °C						

Dissipation Factor (MAX) 25°C	**Frequency (kHz)**	**C≤5uF**	**5<C≤25uF**	**C>25uF**
	1	0.05%	0.08%	0.1%

Insulation Resistance @25°C (<70% RH)for 1 minute at 100VDC applied	**Insulation Resistance**	
	30000 MΩxuF (not to exceed 30GΩ)	
Self Inductance	<1 nano-Henry per mm of lead spacing	
Capacitance Drift Factor	<0.5% after 2 years at 40°C	
Life Expectancy	100000 Hours @WVDC 30000 Hours @ VAC	
	Capacitance Change	≤3% of initially measured value
Failure quota	300/ Billion component hours	
Damp Heat test	**56 days at40°C with 90 to 95%RH, +40°C and no voltage applied**	
	Capacitance Change	≤2% of initially measured value
	Dissipation Factor	≤0.001 at 1kHz and 25°C
	Insulation Resistance	≥50% of maximum specified value
Self Inductance	<1 nano-Henry per mm of lead spacing	
Capacitance Drift Factor	<0.5% after 2 years at 40°C	
Capacitance Temperature Coefficient	-200 ppm/°C, ±100ppm/°C	
Dielectric Strength	**Terminal to Terminal**	**Terminal to case**
	160% of rated VDCApplied for 10 seconds or 150% VAC applied for 2 Seconds and 25°C	3kVAC @ 50/60 Hz applied between terminals and case for 60 seconds at 25°C
Dielectric	Polypropylene	
Construction	Metallized film	
Coating	Flame Retardant plastic box with epoxy resin (UL94V-0)	
Leads	Lead free tinned copper leads	

Americas / EU
Phone: 1-508-996-8561
Email: cdena@cde.com

CDE ENERGIZING IDEAS
CORNELL DUBILIER
ILLINOIS CAPACITOR

Asia
Phone: 852-2793-0931
Email: cdeasia@cde.com

PHB

Metallized Polypropylene Film Capacitors

for Switching Circuits 2, 4 or 6 Leaded

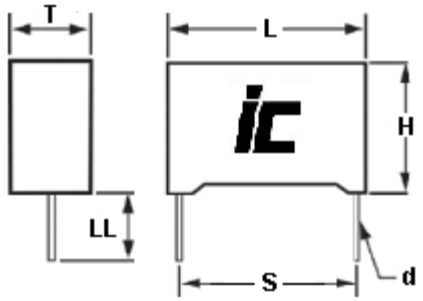

L	26.5	32	32	32	42.5	57.5
H	ALL	≤20	20<H≤24.5	>24.5	ALL	ALL
T	ALL	ALL	≤18	ALL	ALL	ALL
S	22.5	27.5	27.5	27.5	37.5	52.5
d	0.8	0.8	1.0	1.2	1.2	1.2

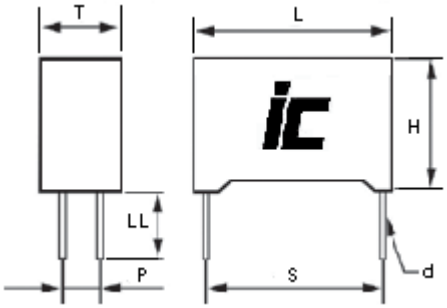

L	32	42.5	57.5
S	27.5	37.5	52.5
d	1.2	1.2	1.2

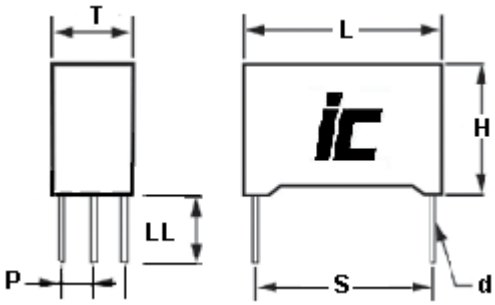

L	42.5	57.5
S	37.5	52.5
d	1.2	1.2

Americas / EU
Phone: 1-508-996-8561
Email: cdena@cde.com

CDE ENERGIZING IDEAS
CORNELL DUBILIER
ILLINOIS CAPACITOR

Asia
Phone: 852-2793-0931
Email: cdeasia@cde.com

PHB

Metallized Polypropylene, High Frequency radial lead box

WVDC	Capacitance (µF)	IC PART NUMBER	dv/dt (v/µ sec.)	Maximum RMS Ripple Current (A) 100 kHz, +70°C	Typical ESR (mΩ) 100 kHz, +25°C	Dims LxHxT (mm)	S (MM)	d (MM)	P (MM)	# Leads
250	1	105PHB250K2G	50	4.5	7.6	26.5x16x7	22.5	0.8		2
250	1.5	155PHB250K2G	50	6.5	6.1	26.5x17x8.5	22.5	0.8		2
250	1.5	155PHB250K2H	40	6.5	7.1	32x20x11	27.5	0.8		2
250	2	205PHB250K2G	50	7.5	5.3	26.5x20x11	22.5	0.8		2
250	2	205PHB250K2H	40	7	6.1	32x20x11	27.5	0.8		2
250	2.2	225PHB250K2G	50	7.5	5.1	26.5x20x11	22.5	0.8		2
250	2.2	225PHB250K2H	40	7	5.8	32x20x11	27.5	0.8		2
250	2.5	255PHB250K2H	40	8	5.4	32x20x11	27.5	0.8		2
250	3	305PHB250K2H	40	9	4.8	32x22x13	27.5	1		2
250	3.3	335PHB250K2H	40	9.5	4.3	32x22x13	27.5	1		2
250	4	405PHB250K2H	40	10.5	3.8	32x22x13	27.5	1		2
250	4.7	475PHB250K2H	40	12	3.5	32x28x14	27.5	1.2		2
250	4.7	475PHB250K4H	40	15	2.8	32x28x14	27.5	1.2	5.1	4
250	5	505PHB250K4H	40	15	2.7	32x28x14	27.4	1.2	5.1	4
250	5	505PHB250K2H	40	12	3.4	32x28x14	27.5	1.2		2
250	6.8	685PHB250K2H	40	14	3.1	32x33x18	27.5	1.2		2
250	6.8	685PHB250K4H	40	18	2.4	32x33x18	27.5	1.2	5.1	4
250	10	106PHB250K4H	40	20.5	1.9	32x33x18	27.5	1.2	10.2	4
250	10	106PHB250K2H	40	20.5	2.6	32x33x18	27.5	1.2		2
250	10	106PHB250K2J	25	14	3.6	42.5x28x17	37.5	1.2		2
250	15	156PHB250K2J	25	14	3.1	42.5x30x22	37.5	1.2		2
250	20	206PHB250K4J	25	24	2.1	42.5x37x28	37.5	1.2	10.2	4
250	20	206PHB250K2J	25	14	2.8	42.5x37x28	37.5	1.2		2
250	22	226PHB250K2J	25	14	2.8	42.5x37x28	37.5	1.2		2
250	22	226PHB250K4J	25	25	2.1	42.5x37x28	37.5	1.2	10.2	4
250	25	256PHB250K4J	25	26.5	1.9	42.5x37x28	37.5	1.2	20.3	4
250	25	256PHB250K2J	25	14	2.6	42.5x37x28	37.5	1.2		2
250	30	306PHB250K2J	25	14	2.6	42.5x45x30	37.5	1.2		2
250	30	306PHB250K4J	25	26.5	1.9	42.5x45x30	37.5	1.2	20.3	4
250	33	336PHB250K2J	25	14	2.4	42.5x45x30	37.5	1.2		2
250	33	336PHB250K4J	25	27	1.7	42.5x45x30	37.5	1.2	20.3	4
250	40	406PHB250K4R	15	26	2.6	57.5x45x30	52.5	1.2	20.3	4
250	40	406PHB250K2R	15	14	3.3	57.5x45x30	52.5	1.2		2
250	50	506PHB250K2R	15	14	3	57.5x50x35	52.5	1.2		2
250	50	506PHB250K4R	15	26.5	2.3	57.5x50x35	52.5	1.2	20.3	4
250	60	606PHB250K4R	15	27	2	57.5x50x35	52.5	1.2	20.3	4
250	60	606PHB250K2R	15	14	2.7	57.5x50x35	52.5	1.2		2
330	0.68	684PHB330K2G	60	5	8.9	26.5x16x7	22.5	0.8		2
330	1	105PHB330K2G	60	6.5	7	26.5x18.5x10	22.5	0.8		2
330	1.5	155PHB330K2H	45	7.5	6.1	32x20x11	27.5	0.8		2
330	2	205PHB330K2H	45	8.5	5.3	32x22x13	27.5	1		2
330	2.2	225PHB330K2H	45	9	5.1	32x22x13	27.5	1		2
330	2.5	255PHB330K2H	45	9.5	4.9	32x22x13	27.5	1		2
330	3	305PHB330K2H	45	10.5	4.3	32x24.5x15	27.5	1		2
330	3.3	335PHB330K2H	45	10.5	4.1	32x24.5x15	27.5	1		2
330	4.7	475PHB330K2H	45	14	3.4	32x33x18	27.5	1.2		2
330	4.7	475PHB330K4H	45	17	2.7	32x33x18	27.5	1.2	5.1	4
330	5	505PHB330K4H	45	17.5	2.6	32x33x18	27.5	1.2	5.1	4
330	5	505PHB330K2H	45	14	3.3	32x33x18	27.5	1.2		2
330	6.8	685PHB330K2H	45	14	2.8	32x37x22	27.5	1.2		2
330	6.8	685PHB330K4H	45	22	2.1	32x37x22	27.5	1.2	10.2	4
330	6.8	685PHB330K2J	30	14	3.7	42.5x28x17	37.5	1.2		2
330	15	156PHB330K2J	30	14	2.7	42.5x37x28	37.5	1.2		2
330	15	156PHB330K4J	30	26	2	42.5x37x28	37.5	1.2	10.2	4
330	20	206PHB330K2J	30	14	2.5	42.5x45x30	37.5	1.2		2
330	20	206PHB330K4J	30	27	1.8	42.5x45x30	37.5	1.2	20.3	4
330	25	256PHB330K4R	17	23	2.9	57.5x45x30	52.5	1.2	20.3	4
330	25	256PHB330K2R	17	14	3.6	57.5x45x30	52.5	1.2		2

Americas / EU
Phone: 1-508-996-8561
Email: cdena@cde.com

CDE CORNELL DUBILIER
ENERGIZING IDEAS
ILLINOIS CAPACITOR

Asia
Phone: 852-2793-0931
Email: cdeasia@cde.com

PHB

Metallized Polypropylene, High Frequency radial lead box

WVDC	Capacitance (µF)	IC PART NUMBER	dv/dt (v/µ sec.)	Maximum RMS Ripple Current (A) 100 kHz, +70°C	Typical ESR (mΩ) 100 kHz, +25°C	Dims LxHxT (mm)	S (MM)	d (MM)	P (MM)	# Leads
330	30	306PHB330K2R	17	14	3.4	57.5x45x30	52.5	1.2		2
330	30	306PHB330K4R	17	24.5	2.7	57.5x45x30	52.5	1.2	20.3	4
330	33	336PHB330K4R	17	26	2.6	57.5x50x35	52.5	1.2	20.3	4
330	33	336PHB330K2R	17	14	3.3	57.5x50x35	52.5	1.2		2
330	35	356PHB330K4R	17	22	2.6	57.5x50x35	52.5	1.2	20.3	4
330	35	356PHB330K2R	17	12	3.2	57.5x50x35	52.5	1.2		2
330	40	406PHB330K4R	17	27	2.4	57.5x50x35	52.5	1.2	20.3	4
330	40	406PHB330K2R	17	14	3.1	57.5x50x35	52.5	1.2		2
400	0.47	474PHB400K2G	75	4.5	8.6	26.5x16x7	22.5	0.8		2
400	0.68	684PHB400K2G	75	6.5	7.1	26.5x18.5x10	22.5	0.8		2
400	0.68	684PHB400K2H	55	6.5	8.8	32x20x11	27.5	0.8		2
400	1	105PHB400K2G	75	7.5	5.8	26.5x20x11	22.5	0.8		2
400	1	105PHB400K2H	55	7	6.7	32x20x11	27.5	0.8		2
400	1.5	155PHB400K2H	55	9	5.3	32x22x13	27.5	1		2
400	2	205PHB400K2H	55	10	4.7	32x24.5x15	27.5	1.2		2
400	2.2	225PHB400K2H	55	10.5	4.4	32x24.5x15	27.5	1.2		2
400	2.5	255PHB400K2H	55	11	4.2	32x24.5x15	27.5	1.2		2
400	3	305PHB400K2H	55	14	3.6	32x33x18	27.5	1.2		2
400	3	305PHB400K4H	55	17	2.9	32x33x18	27.5	1.2	5.1	4
400	3.3	335PHB400K4H	55	17.5	2.8	32x33x18	27.5	1.2	5.1	4
400	3.3	335PHB400K2H	55	14	3.5	32x33x18	27.5	1.2		2
400	4	405PHB400K2H	55	14	3.2	32x33x18	27.5	1.2		2
400	4	405PHB400K4H	55	18.5	2.5	32x33x18	27.5	1.2	10.2	4
400	4.7	475PHB400K2H	55	14	2.8	32x37x22	27.5	1.2		2
400	4.7	475PHB400K4H	55	21.5	2.1	32x37x22	27.5	1.2	10.2	4
400	4.7	475PHB400K2J	40	13.5	3.9	42.5x28x17	37.5	1.2		2
400	5	505PHB400K2H	55	14	2.8	32x37x22	27.5	1.2		2
400	5	505PHB400K4H	55	22	2.1	32x37x22	27.5	1.2	10.2	4
400	5	505PHB400K2J	40	14	3.7	42.5x30x22	37.5	1.2		2
400	6.8	685PHB400K2J	40	14	3.3	42.5x30x22	37.5	1.2		2
400	6.8	685PHB400K4J	40	19.5	2.6	42.5x37x28	37.5	1.2	10.2	4
400	10	106PHB400K4J	40	24.5	2.1	42.5x37x28	37.5	1.2	20.3	4
400	10	106PHB400K2J	40	14	2.8	42.5x37x28	37.5	1.2		2
400	15	156PHB400K2J	40	14	2.4	42.5x45x30	37.5	1.2		2
400	15	156PHB400K4J	40	27	1.7	42.5x45x30	37.5	1.2	20.3	4
400	20	206PHB400K4R	20	24.5	3	57.5x45x30	52.5	1.2	20.3	4
400	20	206PHB400K2R	20	14	3.7	57.5x45x30	52.5	1.2		2
400	22	226PHB400K2R	20	14	3.6	57.5x50x35	52.5	1.2		2
400	22	226PHB400K4R	20	25.5	2.9	57.5x50x35	52.5	1.2	20.3	4
400	25	256PHB400K4R	20	26	2.8	57.5x50x35	52.5	1.2	20.3	4
400	25	256PHB400K2R	20	14	3.4	57.5x50x35	52.5	1.2		2
600	0.22	224PHB600K2G	95	3.5	13	26.5x16x7	22.5	0.8		2
600	0.33	334PHB600K2G	95	5	9.5	26.5x17x8.5	22.5	0.8		2
600	0.47	474PHB600K2G	95	6	8.3	26.5x18.5x10	22.5	0.8		2
600	0.47	474PHB600K2H	75	6	10	32x20x11	27.5	0.8		2
600	0.68	684PHB600K2G	95	7	6.9	26.5x22x13	22.5	0.8		2
600	0.68	684PHB600K2H	75	7	7.6	32x20x11	27.5	0.8		2
600	1	105PHB600K2H	75	8.5	6.1	32x22x13	27.5	1		2
600	1.5	155PHB600K2H	75	11.5	4.6	32x28x14	27.5	1.2		2
600	2	205PHB600K2H	75	14	3.9	32x33x18	27.5	1.2		2
600	2	205PHB600K4H	75	16	3.2	32x33x18	27.5	1.2	10.2	4
600	2.2	225PHB600K2H	75	14	3.9	32x33x18	27.5	1.2		2
600	2.2	225PHB600K4H	75	16.5	3.2	32x33x18	27.5	1.2	10.2	4
600	3	305PHB600K4H	75	21	2.6	32x37x22	27.5	1.2	10.2	4
600	3	305PHB600K2H	75	14	3.3	32x37x22	27.5	1.2		2
600	3	305PHB600K2J	55	14	4.3	42.5x30x22	37.5	1.2		2
600	3.3	335PHB600K2H	75	14	3.2	32x37x22	27.5	1.2		2
600	3.3	335PHB600K4H	75	21.5	2.5	32x37x22	27.5	1.2	10.2	4

Americas / EU
Phone: 1-508-996-8561
Email: cdena@cde.com

CDE CORNELL DUBILIER
ENERGIZING IDEAS
ILLINOIS CAPACITOR

Asia
Phone: 852-2793-0931
Email: cdeasia@cde.com

PHB

Metallized Polypropylene, High Frequency radial lead box

WVDC	Capacitance (µF)	IC PART NUMBER	dv/dt (v/µ sec.)	Maximum RMS Ripple Current (A) 100 kHz, +70°C	Typical ESR (mΩ) 100 kHz, +25°C	Dims LxHxT (mm)	S (MM)	d (MM)	P (MM)	# Leads
600	3.3	335PHB600K2J	55	14	4.1	42.5x30x22	37.5	1.2		2
600	4	405PHB600K2J	55	14	3.6	42.5x37x28	37.5	1.2		2
600	4	405PHB600K4J	55	17.5	2.9	42.5x37x28	37.5	1.2	10.2	4
600	4.7	475PHB600K4J	55	22	2.6	42.5x37x28	37.5	1.2	10.2	4
600	4.7	475PHB600K2J	55	14	3.3	42.5x37x28	37.5	1.2		2
600	5	505PHB600K2J	55	14	3.3	42.5x37x28	37.5	1.2		2
600	5	505PHB600K4J	55	22.5	2.6	42.5x37x28	37.5	1.2	10.2	4
600	6.8	685PHB600K4J	55	25.5	2.1	42.5x45x30	37.5	1.2	20.3	4
600	6.8	685PHB600K2J	55	14	2.8	42.5x45x30	37.5	1.2		2
600	9	905PHB600K2J	55	14	2.6	42.5x45x30	37.5	1.2		2
600	9	905PHB600K4J	55	27	1.9	42.5x45x30	37.5	1.2	20.3	4
600	10	106PHB600K4R	30	22	3.8	57.5x45x30	52.5	1.2	20.3	4
600	10	106PHB600K2R	30	14	4.5	57.5x45x30	52.5	1.2		2
600	15	156PHB600K2R	30	14	3.7	57.5x50x35	52.5	1.2		2
600	15	156PHB600K4R	30	25	3	57.5x50x35	52.5	1.2	20.3	4
700	0.15	154PHB700K2G	135	4	13	26.5x16x7	22.5	0.8		2
700	0.22	224PHB700K2G	135	4.5	11	26.5x17x8.5	22.5	0.8		2
700	0.33	334PHB700K2G	135	6	8.5	26.5x20x11	22.5	0.8		2
700	0.33	334PHB700K2H	105	6	11	32x20x11	27.5	0.8		2
700	0.47	474PHB700K2H	105	7.5	7.5	32x22x13	27.5	1		2
700	0.68	684PHB700K2H	105	9	6.1	32x24.5x15	27.5	1		2
700	1	105PHB700K2H	105	13	4.6	32x33x18	27.5	1.2		2
700	1	105PHB700K4H	105	15.5	3.9	32x33x18	27.5	1.2	10.2	4
700	1.5	155PHB700K4H	105	18	3.3	32x37x22	27.5	1.2	10.2	4
700	1.5	155PHB700K2H	105	14	4	32x37x22	37.5	1.2		2
700	1.5	155PHB700K2J	70	12	5.6	42.5x28x17	37.5	1.2		2
700	2	205PHB700K2H	105	14	3.5	32x37x22	27.5	1.2		2
700	2	205PHB700K4H	105	20	2.8	32x37x22	27.5	1.2	10.2	4
700	2	205PHB700K2J	70	13	4.9	42.5x30x22	37.5	1.2		2
700	2.2	225PHB700K2J	70	12	4.7	42.5x30x22	37.5	1.2		2
700	2.2	225PHB700K4J	70	15.5	4	42.5x37x28	37.5	1.2	10.2	2
700	3	305PHB700K2J	70	14	3.9	42.5x37x28	37.5	1.2		2
700	3	305PHB700K4J	70	20	3.2	42.5x37x28	37.5	1.2	10.2	4
700	3.3	335PHB700K4J	70	21.5	3.1	42.5x37x28	37.5	1.2	20.3	4
700	3.3	335PHB700K2J	70	14	3.8	42.5x37x28	37.5	1.2		2
700	4	405PHB700K2J	70	14	3.3	42.5x45x30	37.5	1.2		2
700	4	405PHB700K4J	70	22.5	2.7	42.5x45x30	37.5	1.2	20.3	4
700	4.7	475PHB700K4J	70	25	2.4	42.5x45x30	37.5	1.2	20.3	4
700	4.7	475PHB700K2J	70	14	3.1	42.5x45x30	37.5	1.2		2
700	5	505PHB700K2J	70	14	3	42.5x45x30	37.5	1.2		2
700	5	505PHB700K4J	70	25.5	2.3	42.5x45x30	37.5	1.2	20.3	4
700	6	605PHB700K4R	40	20	4.3	57.5x45x30	52.5	1.2	20.3	4
700	6	605PHB700K2R	40	14	5	57.5x45x30	52.5	1.2		2
700	6.8	685PHB700K2R	40	14	4.7	57.5x45x30	52.5	1.2		2
700	6.8	685PHB700K4R	40	21.5	4	57.5x45x30	52.5	1.2	20.3	4
700	8	805PHB700K4R	40	23.5	3.7	57.5x50x35	52.5	1.2	20.3	4
700	8	805PHB700K2R	40	14	4.4	57.5x50x35	52.5	1.2		2
700	9	905PHB700K2R	40	14	4.1	57.5x50x35	52.5	1.2		2
700	9	905PHB700K4R	40	25	3.4	57.5x50x35	52.5	1.2	20.3	4
850	0.1	104PHB850K2G	375	4	13	26.5x16x7	22.5	0.8		2
850	0.1	104PHB850K2H	300	4	15	32x17x9	27.5	0.8		2
850	0.15	154PHB850K2G	375	5	9.7	26.5x18.5x10	22.5	0.8		2
850	0.15	154PHB850K2H	300	5.5	11	32x20x11	27.5	0.8		2
850	0.22	224PHB850K2G	375	7	7.6	26.5x22x13	22.5	0.8		2
850	0.22	224PHB850K2H	300	6.5	8.3	32x20x11	27.5	0.8		2
850	0.33	334PHB850K2H	300	8	6.3	32x22x13	27.5	1		2
850	0.47	474PHB850K2H	300	9.5	5.1	32x24.5x15	27.5	1.2		2
850	0.68	684PHB850K2H	300	14	3.8	32x33x18	27.5	1.2		2

Americas / EU
Phone: 1-508-996-8561
Email: cdena@cde.com

CORNELL DUBILIER
ENERGIZING IDEAS
ILLINOIS CAPACITOR

Asia
Phone: 852-2793-0931
Email: cdeasia@cde.com

PHB

Metallized Polypropylene, High Frequency radial lead box

WVDC	Capacitance (µF)	IC PART NUMBER	dv/dt (v/µ sec.)	Maximum RMS Ripple Current (A) 100 kHz, +70°C	Typical ESR (mΩ) 100 kHz, +25°C	Dims LxHxT (mm)	S (MM)	d (MM)	P (MM)	# Leads
850	0.68	684PHB850K4H	300	16	3.1	32x33x18	27.5	1.2	5.1	4
850	1	105PHB850K4H	300	20.5	2.4	32x37x22	27.5	1.2	10.2	4
850	1	105PHB850K2H	300	14	3.1	32x37x22	27.5	1.2		2
850	1	105PHB850K2J	200	13	4.2	42.5x28x17	37.5	1.2		2
850	1.5	155PHB850K2J	200	14	3.4	42.5x30x22	37.5	1.2		2
850	2	205PHB850K2J	200	14	3	42.5x37x28	37.5	1.2		2
850	2	205PHB850K4J	200	23	2.3	42.5x37x28	37.5	1.2	10.2	4
850	2.2	225PHB850K4J	200	24.5	2.3	42.5x37x28	37.5	1.2	10.2	4
850	2.2	225PHB850K2J	200	14	3	42.5x37x28	37.5	1.2		2
850	2.5	255PHB850K2J	200	14	2.8	42.5x37x28	37.5	1.2		2
850	2.5	255PHB850K4J	200	24	2.1	42.5x37x28	37.5	1.2	20.3	4
850	3	305PHB850K4J	200	27	1.8	42.5x45x30	37.5	1.2	20.3	4
850	3	305PHB850K2J	200	14	2.4	42.5x45x30	37.5	1.2		2
850	3.3	335PHB850K2J	200	14	2.4	42.5x45x30	37.5	1.2		2
850	3.3	335PHB850K4J	200	27	1.8	42.5x45x30	37.5	1.2	20.3	4
850	4	405PHB850K4R	110	25	2.5	57.5x45x30	52.5	1.2	20.3	4
850	4	405PHB850K2R	110	14	3.2	57.5x45x30	52.5	1.2		2
850	4.7	475PHB850K2R	110	14	2.8	57.5x45x30	52.5	1.2		2
850	4.7	475PHB850K4R	110	27	2.1	57.5x45x30	52.5	1.2	20.3	4
850	5.6	565PHB850K4R	110	27	2	57.5x50x35	52.5	1.2	20.3	4
850	5.6	565PHB850K2R	110	14	2.7	57.5x50x35	52.5	1.2		2
850	6	605PHB850K2R	110	14	2.6	57.5x50x35	52.5	1.2		2
850	6	605PHB850K4R	110	27	2	57.5x50x35	52.5	1.2	20.3	4

Americas / EU
Phone: 1-508-996-8561
Email: cdena@cde.com

CDE CORNELL DUBILIER
ENERGIZING IDEAS
ILLINOIS CAPACITOR

Asia
Phone: 852-2793-0931
Email: cdeasia@cde.com

MKP

Boxed Metallized Polypropylene Film Capacitors

Class X2 EMI/RFI

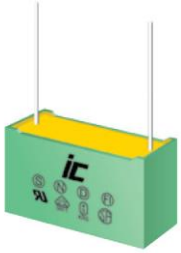

FEATURES	Small Size – Safety Agency Approved – Metalized Polypropylene
APPLICATIONS	EMI filters – Across the Line (Not for use in Series with Mains; See MPXB)

Operating Temperature Range	-40°C to +110°C		
Capacitance Tolerance	±10% at 1 kHz, 20°C		
AC voltage (50/60 Hz)	**UL/CSA**	**ENEC**	**CQC**
	250/275/310	250/275/310	310
Dissipation Factor at 1 kHz and 20°C	Tan δ		
	.1% Max		
Insulation Resistance @20°C (<70% RH)for 1 minute at 100VDC applied	**Capacitance**	**Terminal to Terminal**	**Terminal to Case**
	≤0.33uF	15000 MΩ	>30000 MΩ at 100VDC >5000 MΩ at 500VDC
	>0.33uF	5000 MΩxuF	>30000 MΩ at 100VDC >5000 MΩ at 500VDC
Self Inductance	≤1 nano-Henry per mm of lead spacing		
Dielectric Strength	**Terminal to Terminal**	1333VDC (4.3*310) VDC applied for 60 seconds Cut-off current: 10mAdc Current limiting resistance: 1Ω/V	
	Terminal to case	2050VDC (50/60 Hz) applied between the terminals and case for 60 Seconds and 20°C	
Life Expectancy	**1000 hours at 110°C at 125% of rated voltage with once every hour the voltage is increased to 1000 VAC for 0.1 seconds**		
	Capacitance change	≤10% of initially measured value	
	Dissipation Factor	≤0.8% at 1kHz	
	Insulation Resistance	≥50% of initially specified value (T-T)	
Humidity test	**56 days at 90 to 95% RH, 40C**		
	Capacitance change	≤10% of initially measured value	
	Dissipation Factor	≤0.8% at 1kHz	
	Insulation Resistance	≥50% of initially specified value (T-T)	
Impulse voltage (24 pulses)	C≤ 1uF Vp=2.5kVDC C> 1uF Vp=2.5kV √C		
Capacitance temperature coefficient	-200ppm/°C, ±100ppm/°C		
Construction	Metallized Polypropylene film		
Electrodes	Vacuum deposited Metal layers		
Coating	Flame retardant Solvent resistant plastic case with epoxy end fill (UL94V-0)		
Lead terminations	tinned copper clad steel leads		

Special Order Options

Americas / EU
Phone: 1-508-996-8561
Email: cdena@cde.com

CDE ENERGIZING IDEAS
CORNELL DUBILIER
ILLINOIS CAPACITOR

Asia
Phone: 852-2793-0931
Email: cdeasia@cde.com

MKP

Boxed Metallized Polypropylene Film Capacitors

Class X2 EMI/RFI

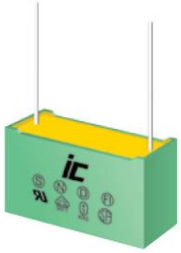

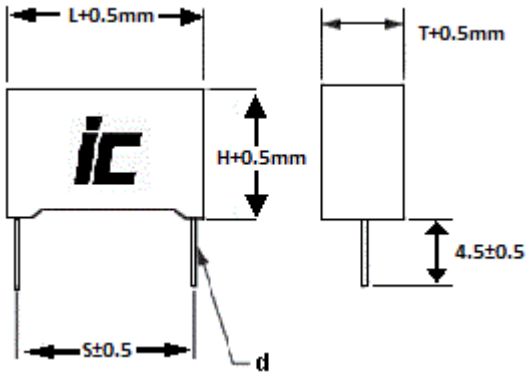

All Dimensions in (mm)
***17mm lead length available upon request**

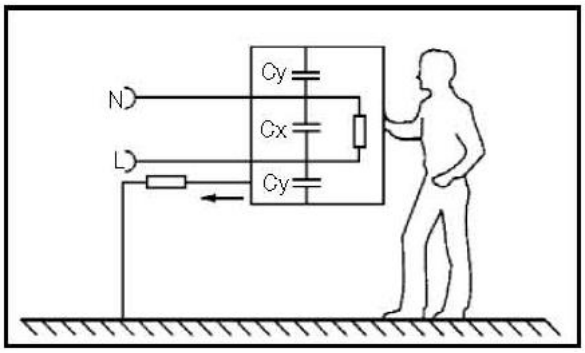

X capacitors are used to suppress electrical noise by reducing the input impedance of the device incorporating the capacitor.
X capacitors are connected across the supply line where failure of the capacitor will not result in personal exposure to electrical shock.
X2 capacitors are to be used in applications where the peak voltage is ≤1200V.

Safety agency	Standard	Voltage	Class	Certificate number
UL/CSA	ANSI/UL 60384-14	250/275/310	FOWX2	E317135
	CSA E60384-1	250/275/310	FOWX8	1041922
VDE/ENEC	DIN EN60384-14 (VDE 0565-1-1):2014-04; EN60384-14:2013-08 DIN EN60384-14/A1 (VDE 0565-1-1/A1):2017-04; EN60384-14:2013/A1:2016 IEC 60384-14:2013 IEC 60384-14:2013/AMD1:2016	250/275/310	X2	40040758
CQC	GB/T14472-1998	310	X2	CQC14001115428

Americas / EU
Phone: 1-508-996-8561
Email: cdena@cde.com

CDE ENERGIZING IDEAS
CORNELL DUBILIER
ILLINOIS CAPACITOR

Asia
Phone: 852-2793-0931
Email: cdeasia@cde.com

MKP

Class X2

Capacitance (µF)	IC PART NUMBER	dv/dt (v/µ sec.)	Dims LxHxT (mm)	S (MM)	d (MM)
0.0047	472MKP275KC	500	10x8x4	7.5	0.6
0.0047	472MKP275K	400	13x10x5	10	0.6
0.0056	562MKP275KC	500	10x8x4	7.5	0.6
0.0056	562MKP275KD	400	13x9x4	10	0.6
0.0068	682MKP275KC	500	10x8x4	7.5	0.6
0.0068	682MKP275K	400	13x9x4	10	0.6
0.0082	822MKP275KC	500	10x8x4	7.5	0.6
0.0082	822MKP275KD	400	13x9x4	10	0.6
0.01	103MKP275KC	500	10x8x4	7.5	0.6
0.01	103MKP275K	400	13x9x4	10	0.6
0.01	103MKP275KE	400	18x8x4	15	0.6
0.015	153MKP275KC	500	10x8x4	7.5	0.6
0.015	153MKP275K	400	13x9x4	10	0.6
0.015	153MKP275KE	400	18x8x4	15	0.6
0.022	223MKP275KCG5	500	10x8x4	7.5	0.6
0.022	223MKP275KC	500	10x9x4	7.5	0.6
0.022	223MKP275K	400	13x9x4	10	0.6
0.022	223MKP275KB	400	18x9x4	15	0.6
0.033	333MKP275KCG4	500	10x10x5	7.5	0.6
0.033	333MKP275KC	500	10x9x5	7.5	0.6
0.033	333MKP275K	400	13x9x4	10	0.6
0.033	333MKP275KE	400	18x9x14	15	0.8
0.047	473MKP275KC	500	10x10x5	7.5	0.6
0.047	473MKP275KD	400	13x9x4	10	0.6
0.047	473MKP275K	400	18x9x4	15	0.6
0.056	563MKP275KC	500	10x11x5	7.5	0.6
0.056	563MKP275KD	400	13x9.5x4.5	10	0.6
0.056	563MKP275KE	400	18x9x4	15	0.6
0.068	683MKP275KC	500	10x12x6	7.5	0.6
0.068	683MKP275KD	400	13x10x5	10	0.6
0.068	683MKP275K	400	18x10x4	15	0.6
0.082	823MKP275KC	500	10x12x6	7.5	0.6
0.082	823MKP275KD	400	13x11x5	10	0.6
0.082	823MKP275KE	400	18x10x5	15	0.8
0.1	104MKP275KC	500	10x13x7	7.5	0.6
0.1	104MKP275KD	400	13x11x5	10	0.6
0.1	104MKP275K	400	18x11x5	15	0.8
0.1	104MKP275KG5	400	18x10.5x5	15	0.8
0.12	124MKP275KD	400	13x12x6	10	0.6
0.12	124MKP275KE	400	18x10x5	15	0.8
0.15	154MKP275KD	400	13x12x7	10	0.6
0.15	154MKP275KA	350	15x11.5x6	12.5	0.8
0.15	154MKP275KE	400	18x10.5x5	15	0.8
0.15	154MKP275K	180	26x14.5x6	22.5	0.8
0.22	224MKP275KD	400	13x14x8	10	0.6
0.22	224MKP275KA	350	15x12.5x7	12.5	0.8
0.22	224MKP275KBG4	400	18x13x7	15	0.8
0.22	224MKP275KB	400	18x11.5x6	15	0.8

Capacitance (µF)	IC PART NUMBER	dv/dt (v/µ sec.)	Dims LxHxT (mm)	S (MM)	d (MM)
0.22	224MKP275K	180	26x14.5x6	22.5	0.8
0.33	334MKP275KA	350	15x14x8.5	12.5	0.8
0.33	334MKP275KE	400	18x13x7	15	0.8
0.33	334MKP275K	180	26x12x6	22.5	0.8
0.39	394MKP275KA	350	15x15x9	12.5	0.8
0.39	394MKP275KE	400	18x13.5x7.5	15	0.8
0.39	394MKP275KG	180	26x12x6	22.5	0.8
0.47	474MKP275KA	350	15x16x10	12.5	0.8
0.47	474MKP275KE	400	18x13.2x7.2	15	0.8
0.47	474MKP275KBG5	180	26x14.2x6	22.5	0.8
0.47	474MKP275KB	180	26x16.5x7.5	22.5	0.8
0.47	474MKP275K	120	31x13.5x6	27.5	0.8
0.47	474MKP275KG	120	32x18x9	27.5	0.8
0.56	4564MKP275KE	400	18x15x9	15	0.8
0.56	564MKP275KG	180	26x14x7	22.5	0.8
0.56	564MKP275KH	120	31x14x6.5	27.5	0.8
0.68	684MKP275KE	400	18x16x10	15	0.8
0.68	684MKP275KG	180	26x17x8	22.5	0.8
0.68	684MKP275K	120	31x15.5x6.5	27.5	0.8
0.82	824MKP275KE	400	18x17.5x10	15	0.8
0.82	824MKP275KG	180	26x16x8	22.5	0.8
0.82	824MKP275KH	120	31x16x7.5	27.5	0.8
1	105MKP275KE	400	18x18.5x11	15	0.8
1	105MKP275KG	180	26x17x9	22.5	0.8
1	105MKP275KGG4	180	26x19x10	22.5	0.8
1	105MKP275K	120	31x17x8	27.5	0.8
1.2	125MKP275KG	180	26x19.5x9	22.5	0.8
1.2	125MKP275KH	120	31x17.5x9	27.5	0.8
1.5	155MKP275KG	180	26x21x10	22.5	0.8
1.5	155MKP275K	120	31x18.5x10	27.5	0.8
1.8	185MKP275KG	180	26x23x12.5	22.5	0.8
1.8	185MKP275KH	120	31x20.5x12	27.5	0.8
2.2	225MKP275KGE	180	26x22x15	22.5	0.8
2.2	225MKP275KG	180	26x24x13.5	22.5	0.8
2.2	225MKP275KG5	120	31x22x13	27.5	0.8
2.2	225MKP275K	120	31x26x18	27.5	0.8
3.3	335MKP275KHF	120	31x26x17.5	27.5	0.8
3.3	335MKP275KH	120	31x29x15.5	27.5	0.8
3.3	335MKP275KJ	100	41.5x26x14.5	37.5	1
3.9	395MKP275KH	120	31x28x19	27.5	0.8
4.7	475MKP275KH	120	31x30.5x20	27.5	0.8
4.7	475MKP275KHG	120	31x32.5x19	27.5	0.8
4.7	475MKP275KJ	100	41.5x30x17	37.5	1
5.6	565MKP275KH	120	31x34.5x21	27.5	0.8
6.8	685MKP275KJ	100	41.5x35.5x22.5	37.5	1
8.2	825MKP275KJ	100	41.5x38x25	37.5	1
10	106MKP275KJ	100	41.5x41x27.5	37.5	1

Americas / EU
Phone: 1-508-996-8561
Email: cdena@cde.com

CDE CORNELL DUBILIER
ENERGIZING IDEAS
ILLINOIS CAPACITOR

Asia
Phone: 852-2793-0931
Email: cdeasia@cde.com

MPX

Boxed Metallized Polypropylene Film Capacitors

CLASS X2 - 85/85 - THB

FEATURES	85/85 THB – Safety Agency Approved Metalized Polypropylene
APPLICATIONS	**MPX** for X2, Across the Line **MPXB** for In Series with Mains EMI Filters – Outdoor Applications

Operating Temperature Range	-40°C to +110°C			
Capacitance Tolerance	±10% or ±20% at 1 kHz, 25°C			
AC voltage (50/60 Hz)	**UL/CSA**	**ENEC**	**CQC**	
	275/305	275/305	305	
Dissipation Factor at 1 kHz and 25°C	**Tan δ**			
	0.01uF≤Cn≤1.0 uF	≤0.1%		
	1.0uF<Cn≤10.0 uF	≤0.3%		
	Cn>10.0 uF	≤0.4%		
Insulation Resistance @25°C (<70% RH) for 1 minute at 100VDC applied	**Capacitance**	**Terminal to Terminal**	**Terminal to Case**	
	≤0.33uF	15,000 MΩ	>30000 MΩ at 100VDC >5000 MΩ at 500VDC	
	>0.33uF	5,000 MΩxuF	>30000 MΩ at 100VDC >5000 MΩ at 500VDC	
Self-Inductance	≤1 nano-Henry per mm of lead spacing and lead length			
Dielectric Strength	**Terminal to Terminal**	1312 VDC applied for 60 seconds or 2000 VDC applied for 2 seconds Cut-off current: 2A ac or 10mAdc Current limiting resistance: 1Ω/V		
	Terminal to case	2050VDC (50/60 Hz) applied between the terminals and case for 60 Seconds and 25°C		
Life Expectancy	**100,000 hours at Un @Hot-Spot temperature T=85**°C			
	Capacitance change	≤10% of initially measured value		
	Dissipation Factor	≤1.0% at 1kHz		
	Insulation Resistance	≥100% of initially specified value (T-T) ≥3000 MΩ (Terminal to case)		
Humidity test	Temperature: 85°C + 2°C; Humidity: 85% + 2% Loading Voltage: 240Vac (50Hz/60Hz) Duration: 1000 hours			
	Capacitance change	≤10% of initially measured value		
	Dissipation Factor	≤1.0% at 1kHz		
	Insulation Resistance	≥50% of initially specified value (T-T) ≥15000 MΩ (Terminal to case)		
Impulse voltage (24 pulses)	C≤ 1uF Vp=2.5kVDC C> 1uF Vp=2.5kV √C			
Capacitance temperature coefficient	-200ppm/°C, ±100ppm/°C			
Construction	Metallized Polypropylene film			
Electrodes	Vacuum deposited Metal layers			
Coating	Flame retardant Solvent resistant plastic case with epoxy end fill (UL94V-0)			
Lead terminations	Tinned copper clad steel leads			

Special Order Options

Americas / EU
Phone: 1-508-996-8561
Email: cdena@cde.com

CDE ENERGIZING IDEAS
CORNELL DUBILIER
ILLINOIS CAPACITOR

Asia
Phone: 852-2793-0931
Email: cdeasia@cde.com

MPX

Boxed Metallized Polypropylene Film Capacitors

CLASS X2 - 85/85 - THB

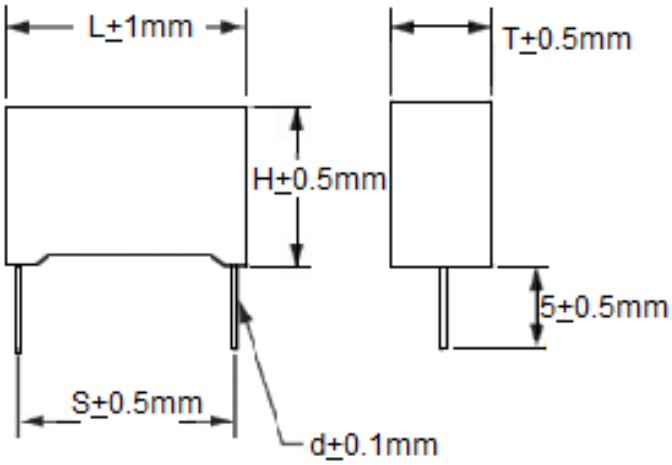

All dimensions in (mm)
***17mm lead length available upon request**

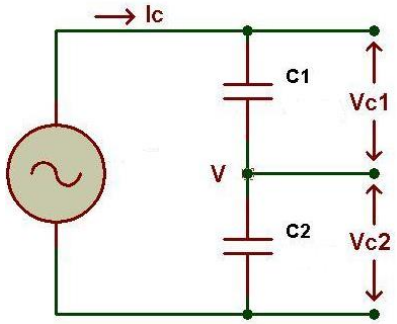

MPXB Series
In Series with Mains; 85/85 THB

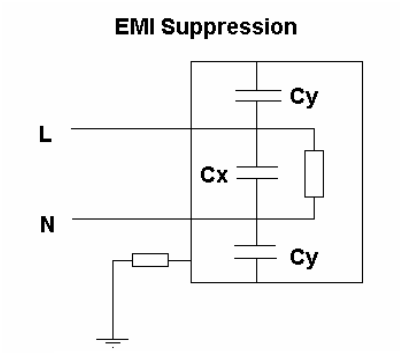

MPX Series
Standard 85/85 X2 circuit

Safety agency	Standard	Voltage	Class	Certificate number
UL/CSA	UL 60384-14(.0047 to 46uF)	275/305	FOWX2*/FOWX8*	E317135
ENEC (VDE)	DIN EN60384-14 (VDE 0565-1-1):2014-04; EN60384-14:2013-08 DIN EN60384-14/A1 (VDE 0565-1-1/A1):2017-04; EN60384-14:2013/A1:2016 IEC 60384-14:2013 IEC 60384-14:2013/AMD1:2016	275/305	X2	40046436
		275/305		40046436
CQC	GB/T14472-1998	275	X2	
	GB/T14472-1998 (.0047 to 46uF)	305		

*Antenna coupling, Line bypass, across the line
^Electromagnetic interference filter

Americas / EU
Phone: 1-508-996-8561
Email: cdena@cde.com

CDE ENERGIZING IDEAS
CORNELL DUBILIER
ILLINOIS CAPACITOR

Asia
Phone: 852-2793-0931
Email: cdeasia@cde.com

MPX

Class X2 85/85 THB

Capacitance (µF)	IC PART NUMBER	dv/dt (v/µ sec.)	Dims LxHxT (mm)	S (MM)	d (MM)
0.01	MPX103K305D	500	13x11x5	10	0.6
0.022	MPX223K305D	500	13x11x5	10	0.6
0.033	MPX333K305D	500	13x11x5	10	0.6
0.047	MPX473K305D	500	13x12x6	10	0.6
0.047	MPX473K305E	400	18x12x6	15	0.6
0.068	MPX683K305D	500	13x12x6	10	0.6
0.068	MPX683K305E	400	18x12x6	15	0.6
0.082	MPX823K305D	500	13x12x6	10	0.6
0.082	MPX823K305E	400	18x12x6	15	0.6
0.1	MPX104K305D	500	13x12x6	10	0.6
0.1	MPX104K305E	400	18x12x6	15	0.6
0.15	MPX154K305D	500	13x14x8	10	0.6
0.15	MPX154K305E	400	18x12x6	15	0.6
0.22	MPX224K305E	400	18x14x8	15	0.8
0.22	MPX224K305G	200	26x16.5x7	22.5	0.8
0.27	MPX274K305E	400	18x14.5x8.5	15	0.8
0.27	MPX274K305G	200	26x16.5x7	22.5	0.8
0.33	MPX334K305E	400	18x16x10	15	0.8
0.33	MPX334K305G	200	26x17x8.5	22.5	0.8
0.47	MPX474K305E	400	18x19x11	15	0.8
0.47	MPX474K305G	200	26x19x10	22.5	0.8
0.56	MPX564K305E	400	18x19x11	15	0.8
0.56	MPX564K305G	200	26x19x10	22.5	0.8
0.68	MPX684K305E	400	18x22x12.5	15	0.8
0.68	MPX684K305G	200	26x20x11	22.5	0.8
0.82	MPX824K305E	400	18x22x12.5	15	0.8
0.82	MPX824K305G	200	26x20x11	22.5	0.8

Capacitance (µF)	IC PART NUMBER	dv/dt (v/µ sec.)	Dims LxHxT (mm)	S (MM)	d (MM)
1	MPX105K305G	200	26x22x12	22.5	0.8
1	MPX105K305H	150	32x20x11	27.5	0.8
1.2	MPX125K305G	200	26x23x13	22.5	0.8
1.2	MPX125K305H	150	32x22x13	27.5	0.8
1.5	MPX155K305G	200	26x24x14	22.5	0.8
1.5	MPX155K305H	130	32x22x13	27.5	0.8
2.2	MPX225K305H	150	32x28x14	27.5	0.8
3.3	MPX335K305H	150	32x33x18	27.5	0.8
4.7	MPX475K305H	150	32x37x22	27.5	0.8
4.7	MPX475K305N	100	42.5x32x19	37.5	1
6.8	MPX685K305N	100	42.5x44x24	37.5	1
10	MPX106K305N	100	42.5x45x30	37.5	1
12	MPX126K305N	100	42.5x45x30	37.5	1
12	MPX126K305R	100	57.5x45x30	52.5	1.2
15	MPX156K305N	100	42.5x45x30	37.5	1
15	MPX156K305R	100	57.5x45x30	52.5	1.2
18	MPX186K305R	100	57.5x45x30	52.5	1.2
20	MPX206K305R	100	57.5x45x30	52.5	1.2
22	MPX226K305R	100	57.5x45x30	52.5	1.2
25	MPX256K305R	100	57.5x45x30	52.5	1.2
30	MPX306K305R	100	57.5x45x30	52.5	1.2
33	MPX336K305R	100	57.5x50x35	52.5	1.2
39	MPX396K305R	100	57.5x50x35	52.5	1.2
40	MPX406K305R	100	57.5x50x35	52.5	1.2
45	MPX456K305R	100	57.5x53x50	52.5	1.2
45	MPX456K305RB	100	57.5x60x45	52.5	1.2

Americas / EU
Phone: 1-508-996-8561
Email: cdena@cde.com

CDE CORNELL DUBILIER
ENERGIZING IDEAS
ILLINOIS CAPACITOR

Asia
Phone: 852-2793-0931
Email: cdeasia@cde.com

MPXB

Capacitive Divider 85/85 THB X2

Capacitance (µF)	IC PART NUMBER	dv/dt (v/µ sec.)	Dims LxHxT (mm)	S (MM)	d (MM)
0.1	MPXB104K305E	400	18x13.5x7.5	15	0.8
0.15	MPXB154K305E	400	18x14.5x8.5	15	0.8
0.22	MPXB224K305E	400	18x16x10	15	0.8
0.33	MPXB334K305E	400	18x19x11	15	0.8
0.47	MPXB474K305G	200	26x20x11	22.5	0.8
0.56	MPXB564K305G	200	26x20x11	22.5	0.8
0.68	MPXB684K305G	200	26x22x12	22.5	0.8
0.82	MPXB824K305G	200	26x22x12	22.5	0.8

Capacitance (µF)	IC PART NUMBER	dv/dt (v/µ sec.)	Dims LxHxT (mm)	S (MM)	d (MM)
1	MPXB105K305G	200	26x23x13	22.5	0.8
1	MPXB105K305H	100	32x22x13	27.5	0.8
1.2	MPXB125K305H	100	32x28x14	27.5	0.8
1.5	MPXB155K305H	100	32x28x14	27.5	0.8
1.8	MPXB185K305H	100	32x33x18	27.5	0.8
2	MPXB205K305H	100	32x33x18	27.5	0.8
2.2	MPXB225K305H	100	32x33x18	27.5	0.8

Americas / EU
Phone: 1-508-996-8561
Email: cdena@cde.com

CDE ENERGIZING IDEAS
CORNELL DUBILIER
ILLINOIS CAPACITOR

Asia
Phone: 852-2793-0931
Email: cdeasia@cde.com

CORNELL DUBILIER

ENERGIZING IDEAS

Phone: (864) 843-2277
Fax: (864) 843-3800
E-mail: info@cde.com

Address: 140 Technology Place
Liberty, SC 29657
USA

Apr 1, 2025